DCR-TRV120/TRV120E/TRV120P/TRV125E/ TR8000E/TR8100E

RMT-814

SERVICE MANUAL

Self Diagnosis Supported model

Ver 1.0 2000. 02

Digital Handycam

InfoLITHIUM

B700 MECHANISM

Photo: DCR-TRV120

US Model
Canadian Model
DCR-TRV120

AEP Model
DCR-TRV120E/TRV125E/TR8000E/TR8100E

UK Model
East European Model
North European Model
Russian Model
DCR-TRV120E/TR8000E

E Model
DCR-TRV120/TRV120E/TRV120P

Hong Kong Model
DCR-TRV120/TRV120E

Korea Model
DCR-TRV120P

Argentina Model
DCR-TRV120P

Brazilian Model
DCR-TRV120

Australian Model
Chinese Model
DCR-TRV120E

Tourist Model
DCR-TRV120/TRV120E

NTSC MODEL : DCR-TRV120/TRV120P
PAL MODEL : DCR-TRV120E/TRV125E/TR8000E/TR8100E

For MECHANISM ADJUSTMENT, refer to the "8mm Video MECHANICAL ADJUSTMENT MANUAL Ⅶ" (9-973-801-11).

SPECIFICATIONS

Video camera recorder

System

Video recording system
2 rotary heads
Helical scaning system
Audio recording system
Rotary heads, PCM system
Quantization: 12 bits (Fs 32 kHz, stereo 1, stereo 2), 16 bits
(Fs 48 kHz, stereo)
Video signal
DCR-TRV120/TRV120P:
NTSC color, EIA standards
DCR-TRV120E/TRV125E/TR8000E/TR8100E:
PAL colour, CCIR standards
Recommended cassette
Hi8/Digital8 video cassette
Recording/playback time (using 120 min. Hi8 video cassette)
SP mode: 1 hour
LP mode: 1 hour and 30 minuites
Fastforward/rewind time (using 120 min. Hi8 video cassette)
Approx. 5 min.
Viewfinder
Electric Viewfinder (monochrome)
Image device
1/4 type CCD (Charge Coupled Device)
DCR-TRV120/TRV120P:
Approx. 460,000 pixels
(Effective: Apporx. 290,000 pixels)
DCR-TRV120E/TRV125E/TR8000E/TR8100E:
Approx. 800,000 pixels
(Effective: Approx. 400,000 pixels)
Lens
Combined power zoom lens
Filter diameter 37 mm (1 1/2 in.)
25× (Optical)
DCR-TRV120/TRV120E: E, AUS, HK, CN, JE/TRV120P:
450× (Digital)
DCR-TRV120E: AEP, UK, EE, NE, RU/DCR-TR8000E
100× (Digital)
DCR-TRV125E/TR8100E:
125× (Digital)
Focal length
3.7 - 92.5 mm (5/32 - 3 3/4 in.)
When converted to a 35 mm still camera
48 - 1200 mm (1 15/16 - 47 1/4 in.)
Colour temperature
Auto
Minimum illumination
DCR-TRV120/TRV120P:
1 lux (F 1.6)
DCR-TRV120E/TRV125E/TR8000E/TR8100E:
3 lux (F 1.6)
0 lux (in the NightShot mode)*
* Objects unable to be seen due to the dark can be shot with infrared lighting.

Input/output connectors

DCR-TRV120/TRV120P:
S video input/output
4-pin mini DIN
Luminance signal: 1 Vp-p, 75 ohms, unbalanced
Chrominance signal: 0.286 Vp-p, 75 ohms, unbalanced
Audio/Video input/output
AV MINIJACK, 1 Vp-p, 75 ohms, unbalanced, sync negative
327 mV, (at output impedance more than 47 kilohms)
Output impedance with less than 2.2 kilohms/Stereo minijack (ø 3.5 mm)
Input impedance more than 47 kilohms
DCR-TRV120E/TRV125E:
S video input/output
4-pin mini DIN
Luminance signal: 1 Vp-p, 75 ohms, unbalanced
Chrominance signal: 0.3 Vp-p, 75 ohms, unbalanced
Audio/Video output
AV MINIJACK, 1 Vp-p, 75 ohms, unbalanced, sync negative
327 mV, (at output impedance more than 47 kilohms)
Output impedance with less than 2.2 kilohms/Stereo minijack (ø 3.5 mm)
DCR-TR8000E/TR8100E:
S video output
4-pin mini DIN
Luminance signal: 1 Vp-p, 75 ohms, unbalanced
Chrominance signal: 0.3 Vp-p, 75 ohms, unbalanced
Audio/Video output
AV MINIJACK, 1 Vp-p, 75 ohms, unbalanced, sync negative
327 mV, (at output impedance more than 47 kilohms)
Output impedance with less than 2.2 kilohms/Stereo minijack (ø 3.5 mm)
DCR-TRV120/TRV120P:
i DV input/output
4-pin connector
DCR-TRV120E/TRV125E/TR8000E/TR8100E:
i DV output
4-pin connector
Headphone jack
Stereo minijack (ø 3.5 mm)
LANC control jack
Stereo mini-minijack (ø 2.5 mm)
Transfer rate: Max 115.2 Kbps
DCR-TRV120/TRV120P/TRV120E/TRV125E:
RS-232C based

– Continued on next page –

Digital 8 DIGITAL VIDEO CASSETTE RECORDER

SONY

MIC jack
Stereo minijack (ø 3.5 mm)
DCR-TRV120/TRV120E: E, AUS, CN, HK, JE/TRV120P:

LCD screen

Picture
2.5 inches measured diagonally
50.3 × 37.4 mm (2 × 1 1/2 in.)
Total dot number
61,600 (280 × 220)
DCR-TRV120E: AEP, UK, EE, NE, RU/TRV125E:

LCD screen

Picture
2.5 inches measured diagonally
50.3 × 37.4 mm (2 × 1 1/2 in.)
Total dot number
123,200 (560 × 220)

General

Power requirements
7.2 V (battery pack)
8.4 V (AC power adaptor)
Average power consumption (when using the battery pack)
DCR-TRV120/TRV120P:
During camera recording using LCD
3.5 W
Viewfinder
3.1 W
DCR-TRV120E/TRV125E:
During camera recording using LCD
3.6 W
Viewfinder
3.2 W
DCR-TR8000E/TR8100E:
During camera recording
3.1 W
Operating temperature
0 °C to 40 °C (32 °F to 104 °F)
Storage temperature
–20 °C to +60 °C (–4 °F to +140 °F)
Dimensions (Approx.)
4 1/4 × 4 1/4 × 9 1/4 in.
(107 × 106 × 233 mm) (w/h/d)
Mass (approx.)
DCR-TRV120/TRV120P/TRV120E/TRV125E:
930 g (2 lb)
DCR-TR8000E/TR8100E:
860 g (1 lb 14 oz)
excluding the battery pack, lithium battery, cassette and shoulder strap
DCR-TRV120/TRV120P/TRV120E/TRV125E:
1.1 kg (2 lb 1 oz)
DCR-TR8000E/TR8100E:
1 kg (2 lb 3 oz)
including the battery pack
DCR-TRV120/TRV120P:
NP-F330, lithium battery CR2025, 120min. Hi8 cassette, and shoulder strap
DCR-TRV120E/TRV125E:
NP-F330 or F550, lithium battery CR2025, 120 min. Hi8 cassette, and shoulder strap
DCR-TR8000E/TR8100E:
NP-F330 or F550, lithium battery CR2025, 90 min. Hi8 cassette, and shoulder strap

AC power adaptor

Power requirements
100 - 240 V AC, 50/60 Hz
Power consumption
23 W
Output voltage
DC OUT: 8.4 V, 1.5 A in the operating mode
Operating temperature
0 °C to 40 °C (32 °F to 104 °F)
Storage temperature
–20 °C to +60 °C (–4 °F to +140 °F)
Dimensions (approx.)
125 × 39 × 62 mm
(5 × 1 9/16 × 2 1/2 in.) (w/h/d)
excluding projecting parts
Mass (approx.)
280 g (9.8 oz)
excluding power cord

Battery pack

Output voltage
DC 7.2 V
Capacity
DCR-TRV120/TRV120P:
NP-F330: 5.0 Wh
DCR-TRV120E/TRV125E/TR8000E/TR8100E:
NP-F330: 5.0 Wh
NP-F550: 10.8 Wh
Dimensions (approx.)
38 × 21 × 71 mm
(1 9/16 × 13/16 × 2 7/8 in.)
(w/h/d)
Mass (approx.)
95 g (3.4 oz)
Type
Lithium ion

Design and specifications are subject to change without notice.

SAFETY-RELATED COMPONENT WARNING!!

COMPONENTS IDENTIFIED BY MARK ⚠ OR DOTTED LINE WITH MARK ⚠ ON THE SCHEMATIC DIAGRAMS AND IN THE PARTS LIST ARE CRITICAL TO SAFE OPERATION. REPLACE THESE COMPONENTS WITH SONY PARTS WHOSE PART NUMBERS APPEAR AS SHOWN IN THIS MANUAL OR IN SUPPLEMENTS PUBLISHED BY SONY.

ATTENTION AU COMPOSANT AYANT RAPPORT À LA SÉCURITÉ!

LES COMPOSANTS IDENTIFIÉS PAR UNE MARQUE ⚠ SUR LES DIAGRAMMES SCHÉMATIQUES ET LA LISTE DES PIÈCES SONT CRITIQUES POUR LA SÉCURITÉ DE FONCTIONNEMENT. NE REMPLACER CES COMPOSANTS QUE PAR DES PIÈCES SONY DONT LES NUMÉROS SONT DONNÉS DANS CE MANUEL OU DANS LES SUPPLÉMENTS PUBLIÉS PAR SONY.

SAFETY CHECK-OUT

After correcting the original service problem, perform the following safety checks before releasing the set to the customer.

1. Check the area of your repair for unsoldered or poorly-soldered connections. Check the entire board surface for solder splashes and bridges.
2. Check the interboard wiring to ensure that no wires are "pinched" or contact high-wattage resistors.
3. Look for unauthorized replacement parts, particularly transistors, that were installed during a previous repair. Point them out to the customer and recommend their replacement.
4. Look for parts which, though functioning, show obvious signs of deterioration. Point them out to the customer and recommend their replacement.
5. Check the B+ voltage to see it is at the values specified.
6. Flexible Circuit Board Repairing
   - Keep the temperature of the soldering iron around 270 ˚C during repairing.
   - Do not touch the soldering iron on the same conductor of the circuit board (within 3 times).
   - Be careful not to apply force on the conductor when soldering or unsoldering.

Supplied accessories

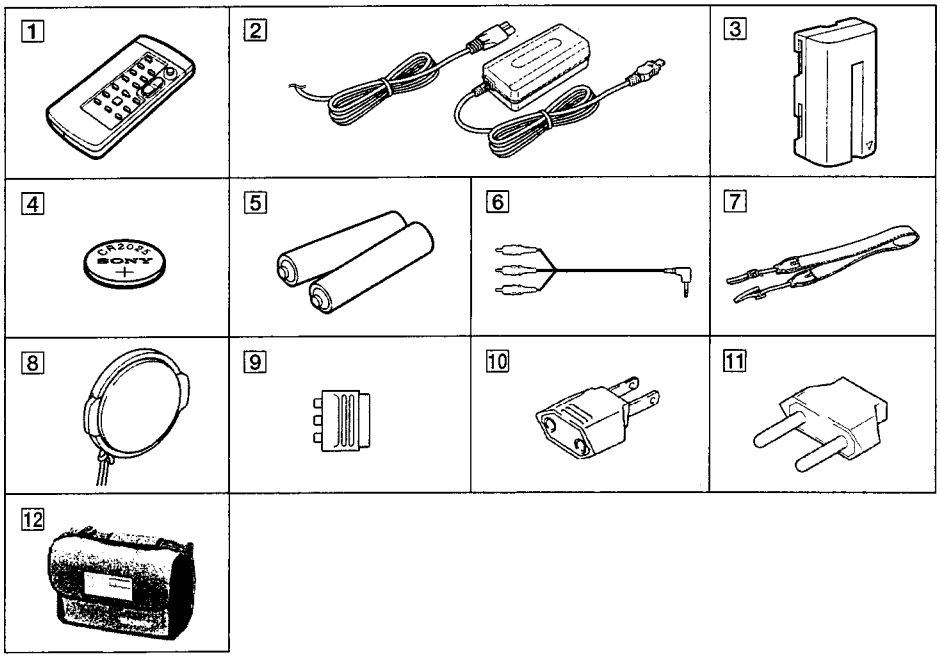

1 **Wireless Remote Commander** (1)
2 **AC-L10A/L10B/L10C AC power adaptor** (1), **Mains lead** (1)
3 **NP-F330 battery pack** (1)
DCR-TRV120/TRV120E/TRV120P/TR8000E
NP-F550 battery pack (1)
DCR-TRV125E/TR8100E
4 **CR2025 lithium battery** (1)
The lithium battery is already installed in your camcorder.
5 **R6 (Size AA) battery for Remote Commander** (2)
6 **A/V connecting cable** (1)
7 **Shoulder strap** (1)
8 **Lens cap** (1)
9 **21-pin adaptor** (1)
DCR-TRV120E: AEP, UK, EE, NE, RU/TRV125E
10 **2-pin conversion adaptor (1)**
DCR-TRV120: E, HK, BR/TRV120: E, HK
11 **2-pin conversion adaptor (1)**
DCR-TRV120: JE/TRV120E: JE
12 **Carrying bag (1)**
DCR-TRV120P

Table for differences of function

Model	DCR-TRV120	DCR-TRV120P	DCR-TRV120E		DCR-TRV125E	DCR-TR8000E	DCR-TR8100E
Destination	US, CND, E, HK, KR, BR, JE	E, AR	AEP, UK, EE, NE, RU	E, AUS, HK, CN, JE	AEP	AEP, UK, EE, NE, RU	AEP
Color system	NTSC		PAL	PAL	PAL	PAL	PAL
Digital zoom	450×		100×	450×	125×	100×	125×
CCD imager	720H		960H	960H	960H	960H	960H
MONITOR IN	○		○	○	○	×	×
VTR REC	○		×	○	×	×	×
LCD type	TYPE S		TYPE S	TYPE C	TYPE S	×	×
LCD (pixel)	61k		123k	61k	123k	×	×
CD board	CD-242		CD-244	CD-244	CD-244	CD-269	CD-269
CF board	CF-69		CF-69	CF-69	CF-69	CF-71	CF-71
FU board	FU-138		FU-138	FU-138	FU-138	FU-143	FU-143
PD board	PD-117		PD-117	PD-117	PD-117	×	×
SE board	SE-104		SE-104	SE-104	SE-104	SE-113	SE-113

- Abbreviation
AR : Argentina model
AUS : Australian model
BR : Brazilian model
CN : Chinese model
CND : Canadian model
EE : East European model
HK : Hong Kong model
JE : Tourist model
KR : Korea model
NE : North European model
RU : Russian model

TABLE OF CONTENTS

Section	Title	Page
SERVICE NOTE		7
1.	Power Supply During Repairs	7
2.	To Take Out a Cassette When Not Eject (Force Eject)	7
3.	Note for Repair	8
SELF-DIAGNOSIS FUNCTION		9
1.	Self-diagnosis Function	9
2.	Self-diagnosis Display	9
3.	Service Mode Display	9
3-1.	Display Method	9
3-2.	Switching of Backup No.	9
3-3.	End of Display	9
4.	Self-diagnosis Code Table	10
1.	GENERAL	
Checking Supplied Accessories		1-1
Quick Start Guide		1-1
Using This Manual		1-2
Step 1 Preparing the Power Supply		1-2
Step 2 Inserting a Cassette		1-4
Recording a Picture		1-4
Checking the Recording – END SEARCH/EDITSEARCH/Rec Review		1-7
Playing Back a Tape		1-7
Viewing the Recording on TV		1-8
Recording a Still Image on a Tape – Tape Photo Recording		1-9
Using the Wide Mode		1-10
Using the Fader Function		1-10
Using Special Effects – Picture Effect		1-11
Using Special Effects – Digital Effect		1-11
Using the PROGRAM AE Function		1-12
Adjusting the Exposure Manually		1-13
Focusing Manually		1-13
Superimposing a Title		1-13
Making Your Own Titles		1-14
Inserting a Scene		1-14
Playing Back a Tape with Picture Effects		1-15
Playing Back a Tape with Digital Effects		1-15
Enlarging Recorded Images – PB ZOOM		1-15
Quickly Locating a Scene Using the Zero Set Memory Function		1-15
Searching a Recording by Date – Date Search		1-16
Searching for a Photo – Photo Search/Photo Scan		1-16
Dubbing a Tape		1-17
Changing the Menu Settings		1-18
Resetting the Date and Time		1-19
Digital8 System, Recording and Playback		1-20
Changing the Lithium Battery in Your Camcorder		1-20
Troubleshooting		1-21
Self-diagnosis Display		1-22
Warning Indicators and Messages		1-22
Using Your Camcorder Abroad		1-23
Maintenance Information and Precautions		1-23
Identifying the Parts and Controls		1-25
2.	DISASSEMBLY	
2-1.	LCD Assembly, PD-117 Board (TRV model)	2-2
2-2.	Front Panel Assembly	2-3
2-3.	Cabinet (L) Assembly, Cassette Lid Assembly	2-3
2-4.	Cabinet (R) Assembly	2-4
2-5.	CF-69 Board (TRV model)	2-4
2-6.	CF-71 Board (TR model)	2-4
2-7.	EVF Block	2-4
2-8.	EVF Assembly	2-5
2-9.	VF-129 Board , CRT Assembly	2-5
2-10.	Battery Panel Assembly	2-6
2-11.	Cabinet (L) Assembly	2-6
2-12.	Lens Block	2-6
2-13.	Control Switch Block (FK-10000)	2-6
2-14.	FU-138/143 Board	2-7
2-15.	VC-235 Board	2-7
2-16.	Circuit Boards Location	2-8
2-17.	Flexible Boards Location	2-9
3.	BLOCK DIAGRAMS	
3-1.	Overall Block Diagram 1	3-1
3-2.	Overall Block Diagram 2	3-3
3-3.	Overall Block Diagram 3	3-5
3-4.	Power Block Diagram 1	3-7
3-5.	Power Block Diagram 2	3-9
3-6.	Power Block Diagram 3	3-11
4.	PRINTED WIRING BOARDS AND SCHEMATIC DIAGRAMS	
4-1.	Frame Schematic Diagrams	4-3
	Frame (1) Schematic Diagram	4-3
	Frame (2) Schematic Diagram	4-5
4-2.	Printed Wiring Boards and Schematic Diagrams	4-7
	CD-242 Printed Wiring Board and Schematic Diagram	4-7
	CD-244/269 Printed Wiring Board and Schematic Diagram	4-9
	VC-235 Printed Wiring Board	4-11
	VC-235 (CAMERA PROCESSOR) Schematic Diagram	4-15
	VC-235 (Y/C PROCESSOR) Schematic Diagram	4-17
	VC-235 (LENS MOTOR DRIVE) Schematic Diagram	4-19
	VC-235 (VIDEO IN/OUT) Schematic Diagram	4-21
	VC-235 (BASE BAND INPUT) Schematic Diagram	4-23
	VC-235 (VIDEO/AUDIO DSP, D/A CONVERTER) Schematic Diagram	4-25
	VC-235 (DV INTERFACE, OSD) Schematic Diagram	4-27
	VC-235 (A/D CONVERTER, REC/PB AMP) Schematic Diagram	4-29
	VC-235 (Hi8/Std8 PB AMP) Schematic Diagram	4-31
	VC-235 (HI CONTROL) Schematic Diagram	4-33
	VC-235 (Digital8 MECHANISM CONTROL) Schematic Diagram	4-35
	VC-235 (CAMERA CONTROL, Hi8/Std8 MECHANISM CONTROL) Schematic Diagram	4-37
	FP-38, FP-220, FP-221, FP-249, FP-355, FP-356, VC-235 (SERVO) Schematic Diagram	4-39
	FP-249, FP-355, FP-356 Printed Wiring Boards and VC-235 (D/A CONVERTER) Schematic Diagram	4-41
	VC-235 (AUDIO IN/OUT) Schematic Diagram	4-43
	VC-235 (DC/DC CONVERTER) Schematic Diagram	4-45
	SE-104/113 Printed Wiring Board	4-47
	SE-104/113 Schematic Diagram	4-49
	FP-156, MI-37 Printed Wiring Boards	4-51
	FP-156, MI-37 (STEREO MIC AMP) Schematic Diagram	4-55
	MI-37 (IR TRANSMITTER) Schematic Diagram	4-57
	CF-69 Printed Wiring Board	4-59
	MF-10000, CF-69 Schematic Diagram	4-63
	MF-10000, CF-71 Schematic Diagram	4-65
	CF-71 Printed Wiring Board	4-67
	FK-10000 Schematic Diagram	4-71
	VF-129 Schematic Diagram	4-73
	PD-117 Printed Wiring Board	4-75

Section	Title	Page
	PD-117 (RGB LCD DRIVER, TIMING GENERATOR) Schematic Diagram	4-79
	PR-10000, PD-117 (CG LCD DRIVER, BACK LIGHT) Schematic Diagram	4-81
	FU-138/143 Printed Wiring Board	4-83
	SS-10000, FU-138/143 Schematic Diagram	4-85
4-3.	Waveforms	4-87
4-4.	Parts Location	4-91

5. ADJUSTMENTS

1.	Before Starting Adjustment	5-1
1-1.	Adjusting Items when Replacing Main Parts and Boards	5-2
5-1.	Camera Section Adjustment	5-4
1-1.	Preparations Before Adjustment (Camera Section)	5-4
1-1-1.	List of Service Tools	5-4
1-1-2.	Preparations	5-5
1-1-3.	Precaution	5-8
1.	Setting the Switch	5-8
2.	Order of Adjustments	5-8
3.	Subjects	5-8
1-2.	Initialization of 7, 8, C, D, E, F Page Data	5-9
1-2-1.	Initialization of 8, C, D Page Data	5-9
1.	Initializing the 8, C, D Page Data	5-9
2.	Modification of 8, C, D Page Data	5-9
3.	8 Page Table	5-9
4.	C Page Table	5-10
5.	D Page Table	5-11
1-2-2.	Initialization of 7, E, F Page Data	5-12
1.	Initializing the 7, E, F Page Data	5-12
2.	Modification of 7, E, F Page Data	5-12
3.	7 Page Table	5-12
4.	E Page Table	5-13
5.	F Page Table	5-14
1-3.	Camera System Adjustments	5-15
1.	HALL Adjustment	5-15
2.	Flange Back Adjustment (Using Minipattern Box)	5-16
3.	Flange Back Adjustment (Using Flange Back Adjustment Chart Subject More Than 500 m Away)	5-17
3-1.	Flange Back Adjustment (1)	5-17
3-2.	Flange Back Adjustment (2)	5-17
4.	Flange Back Check	5-18
5.	Optical Axis Adjustment	5-19
6.	Picture Frame Setting	5-20
7.	Color Reproduction Adjustment	5-21
8.	AWB & LV Standard Data Input	5-22
9.	Auto White Balance Adjustment	5-22
10.	White Balance Check	5-23
11.	Angular Velocity Sensor Sensitivity Data Preset and Steady Shot Check	5-24
1-4.	Monochrome Electronic Viewfinder System Adjustments	5-25
1-4-1.	Horizontal Slant Check	5-25
1-4-2.	Centering Adjustment	5-25
1-4-3.	Focus Adjustment	5-25
1-4-4.	Aberration Adjustment	5-26
1-4-5.	Horizontal Amplitude Adjustment (VF-129 Board)	5-26
1-4-6.	Vertical Amplitude Adjustment (VF-129 Board)	5-27
1-4-7.	Brightness Adjustment (VF-129 Board)	5-27
1-4-8.	Horizontal Amplitude, Vertical Amplitude, Focus Check	5-27
1-5.	LCD System Adjustments (DCR-TRV120/TRV120E/TRV120P/TRV125E)	5-28
1.	LCD Initial Data Input (1)	5-28
2.	LCD Initial Data Input (2)	5-29
3.	VCO Adjustment (PD-117 Board)	5-29
4.	RGB AMP Adjustment (PD-117 Board)	5-30
5.	Contrast Adjustment (PD-117 Board)	5-30
6.	COM AMP Adjustment (PD-117 Board)	5-31
7.	V-COM Adjustment (PD-117 Board)	5-31
8.	White Balance Adjustment (PD-117 Board)	5-32
5-2.	MECHANISM SECTION ADJUSTMENT	5-33
2-1.	Hi8/Standard 8 mm Mode	5-33
2-1-1.	How to Enter Playback Mode Without Cassette	5-33
2-1-2.	Tape Path Adjustment	5-33
1.	Preparations for Adjustment	5-33
2-2.	Digital8 Mode	5-34
2-2-1.	How to Enter Record Mode Without Cassette	5-34
2-2-2.	How to Enter Playback Mode Without Cassette	5-34
2-2-3.	Overall Tape Path Check	5-34
1.	Recording of the Tape Path Check Signal	5-34
2.	Tape Path Check	5-34
5-3.	Video Section Adjustment	5-35
3-1.	Preparations Before Adjustments	5-35
3-1-1.	Equipment to Required	5-35
3-1-2.	Precautions on Adjusting	5-36
3-1-3.	Adjusting Connectors	5-37
3-1-4.	Connecting the Equipment	5-37
3-1-5.	Alignment Tape	5-38
3-1-6.	Input/output Level and Impedance	5-39
3-2.	System Control System Adjustment	5-40
1.	Initialization of 7, 8, C, D, E, F Page Data	5-40
2.	Node Unique ID No. Input	5-40
2-1.	Input of Company ID	5-40
2-2.	Input of Serial No.	5-40
3.	Battery End Adjustment (VC-235 Board)	5-42
3-3.	Servo and RF System Adjustments	5-43
1.	REEL FG Adjustment (VC-235 Board)	5-43
2.	PLL f_0 & LPF f_0 Pre-adjustment (VC-235 Board)	5-43
3.	Switching Position Adjustment (VC-235 Board)	5-44
4.	AGC Center Level Adjustment (VC-235 Board)	5-44
5.	APC & AEQ Adjustment (VC-235 Board)	5-45
6.	PLL f_0 & LPF f_0 Final Adjustment (VC-235 Board)	5-45
7.	Hi8/standard 8 mm Switching Position Adjustment (VC-235 Board)	5-46
8.	CAP FG Duty Adjustment (VC-235 Board)	5-46
3-4.	Video System Adjustments	5-47
3-4-1.	Video System Adjustments	5-47
1.	27 MHz/36 MHz Origin Oscillation Adjustment (VC-235 Board))	5-47
2.	Chroma BPF f_0 Adjustment (VC-235 Board)	5-47
3.	S VIDEO OUT Y Level Adjustment (VC-235 Board)	5-48
4.	S VIDEO OUT Chroma Level Adjustment (VC-235 Board)	5-48
5.	VIDEO OUT Y, Chroma Level Check (VC-235 Board)	5-49
6.	Hi8/standard 8 mm AFC f_0 Adjustment (VC-235 Board) (Using Digital Voltmeter)	5-49
7.	Hi8/standard 8 mm AFC f_0 Adjustment (VC-235 Board) (Auto Adjustment)	5-49
3-5.	IR Transmitter Adjustments	5-50
1.	IR Video Carrier Frequency Adjustment (MI-37 Board)	5-50
2.	IR Video Deviation Adjustment (MI-37 Board)	5-50
3.	IR Audio Deviation Adjustment (MI-37 Board)	5-51
3-6.	Audio System Adjustments	5-52
1.	Hi8/standard 8 mm AFM BPF f_0 Adjustment (VC-235 Board)	5-52
2.	Hi8/standard 8 mm AFM 1.5 MHz Deviation Adjustment (VC-235 Board)	5-53
3.	Hi8/standard 8 mm AFM 1.7 MHz Deviation Adjustment (VC-235 Board)	5-53
4.	Digital8 Playback Level Check	5-53
5.	Overall Level Characteristics Check	5-53
6.	Overall Distortion Check	5-53
7.	Overall Noise Level Check	5-54
8.	Overall Separation Check	5-54
5-4.	SERVICE MODE	5-55
4-1.	Adjustment Remote Commander	5-55
1.	Using the Adjustment Remote Commander	5-55
2.	Precautions Upon Using the Adjustment Remote Commander	5-55
4-2.	Data Process	5-56

Section	*Title*	*Page*
4-3.	Service Mode	5-57
1.	Setting the Test Mode	5-57
2.	Emergence Memory Address	5-57
2-1.	C Page Emergence Memory Address	5-57
2-2.	F Page Emergence Memory Address	5-58
2-3.	EMG Code (Emergency Code)	5-58
2-4.	MSW Code	5-59
3.	Bit Value Discrimination	5-60
4.	Input/output Check	5-60
5.	LED, LCD (Display Window) Check	5-60
6.	Record of Use Check	5-61
7.	Switch Check (1)	5-61
8.	Switch Check (2)	5-62
9.	Headphone Jack Check	5-62

6. REPAIR PARTS LIST

6-1.	Exploded Views	6-1
6-1-1.	Front Panel Section	6-1
6-1-2.	Cabinet (R) Section (TRV120/TRV120E/TRV120P/TRV125E)	6-2
6-1-3.	Cabinet (R) Section (TR8000E/TR8100E)	6-3
6-1-4.	EVF Block Section	6-4
6-1-5.	LCD Assembly Section (TRV120/TRV120E/TRV120P/TRV125E)	6-5
6-1-6.	Cabinet (L) Section	6-6
6-1-7.	Lens Block Section	6-7
6-1-8.	Main Board Section	6-8
6-1-9.	Cassette Compartment Assembly	6-9
6-1-10.	LS Chassis Assembly	6-10
6-1-11.	Mechanism Chassis Assembly	6-11
6-2.	Electrical Parts List	6-12

* The optical axis frame is shown on page 251.
The color reproduction frame is shown on page 252.
The parts reference sheet is shown on page 253.

SERVICE NOTE

1. POWER SUPPLY DURING REPAIRS

In this unit, about 10 seconds after power is supplied (8.4 V) to the battery terminal using the service power cord (J-6082-223-A), the power is shut off so that the unit cannot operate.
This following two methods are available to prevent this. Take note of which to use during repairs.

Method 1.
Connect the servicing remote commander RM-95 (J-6082-053-B) to the LANC jack, and set the remote commander switch to the "ADJ" side.

Method 2.
Press the battery switch of the battery terminal using adhesive tape, etc.

Method 3.
Use the DC IN terminal. (Use the AC power adaptor.)

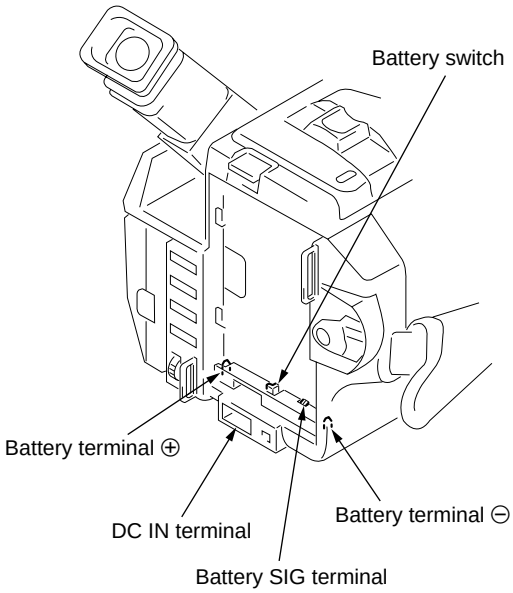

2. TO TAKE OUT A CASSETTE WHEN NOT EJECT (FORCE EJECT)

① Refer to 2-2 to remove the front panel assembly.
② Refer to 2-4 to remove the cabinet (R) assembly.
③ Refer to 2-10 to remove the battery panel assembly.
④ Refer to 2-11 to remove the cabinet (L) assembly.
⑤ Disconnect CN4401 of VC-235 board.
⑥ Add +5 V from the DC POWER SUPPLY and unload with a pressing the cassette lid.

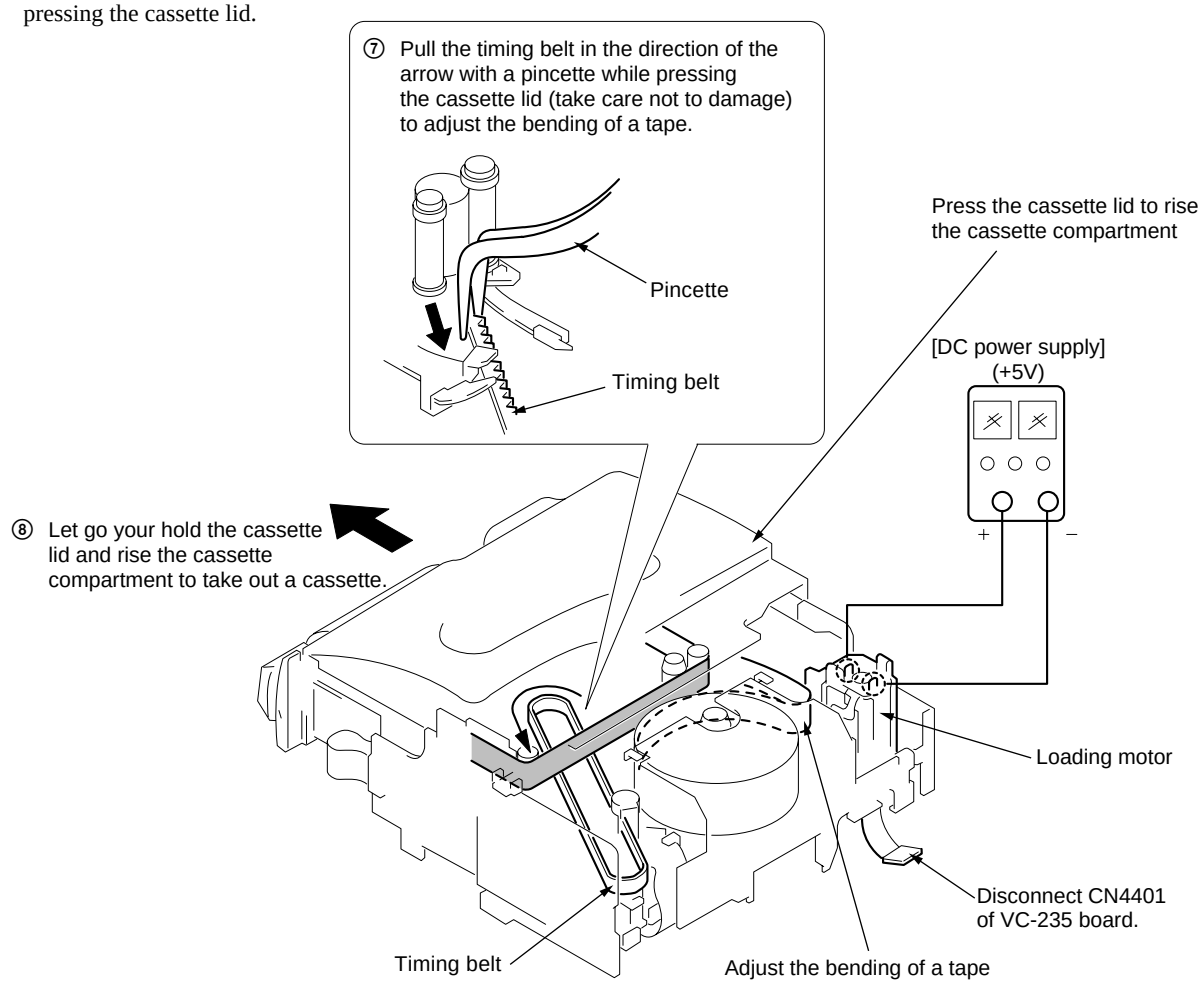

3. NOTE FOR REPAIR

Make sure that the flat cable and flexible board are not cracked of bent at the terminal.
Do not insert the cable insufficiently nor crookedly.

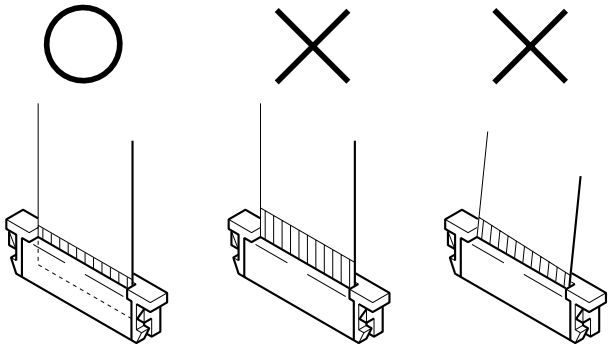

Cut and remove the part of gilt which comes off at the point. (Take care that there are some pieces of gilt left inside)

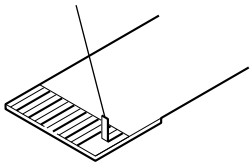

When remove a connector, don't pull at wire of connector.
Be in danger of the snapping of a wire.

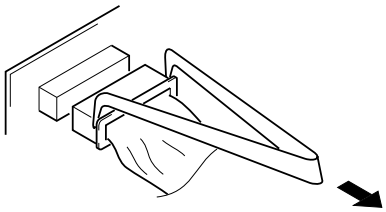

When installing a connector, don't press down at wire of connector.
Be in danger of the snapping of a wire.

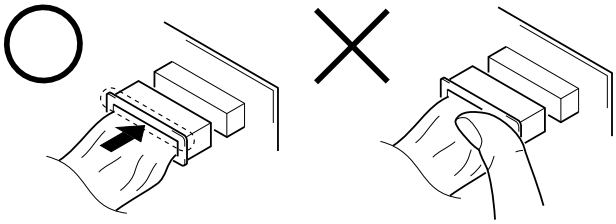

SELF-DIAGNOSIS FUNCTION

1. Self-diagnosis Function

When problems occur while the unit is operating, the self-diagnosis function starts working, and displays on the viewfinder or Display window what to do. This function consists of two display; self-diagnosis display and service mode display.
Details of the self-diagnosis functions are provided in the Instruction manual.

2. Self-diagnosis Display

When problems occur while the unit is operating, the counter of the viewfinder or Display window shows a 4-digit display consisting of an alphabet and numbers, which blinks at 3.2 Hz. This 5-character display indicates the “repaired by:”, “block” in which the problem occurred, and “detailed code” of the problem.

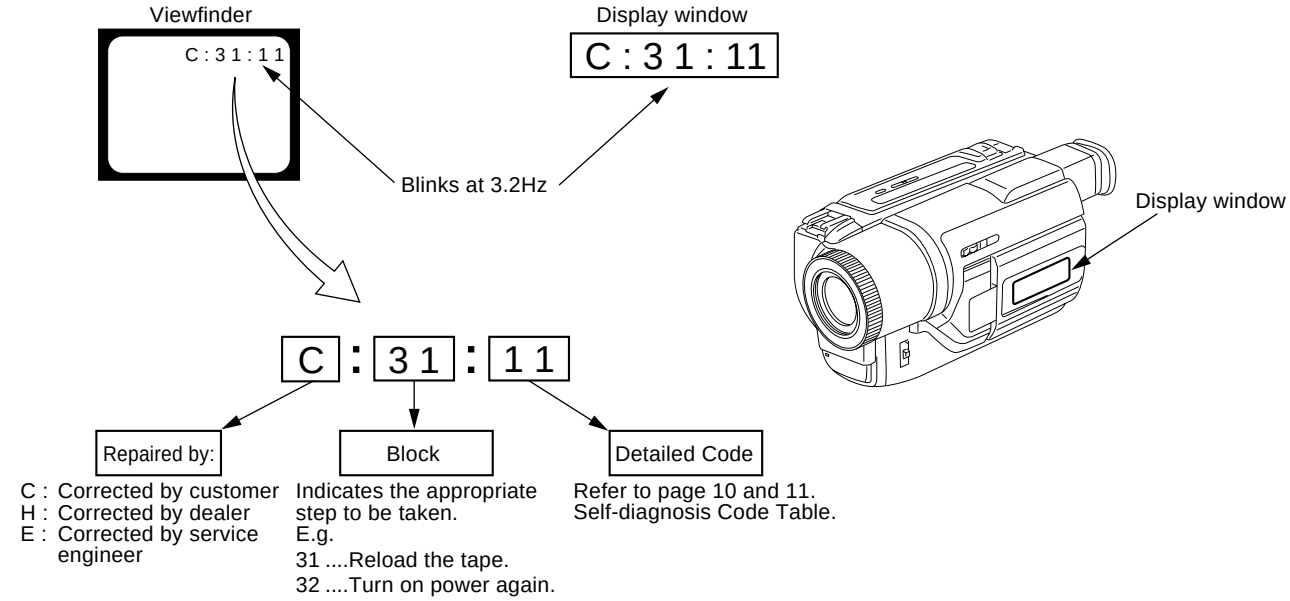

3. Service Mode Display

The service mode display shows up to six self-diagnosis codes shown in the past.

3-1. Display Method

While pressing the “STOP” key, set the switch from OFF to “VTR or PLAYER”, and continue pressing the “STOP” key for 5 seconds continuously. The service mode will be displayed, and the counter will show the backup No. and the 5-character self-diagnosis codes.

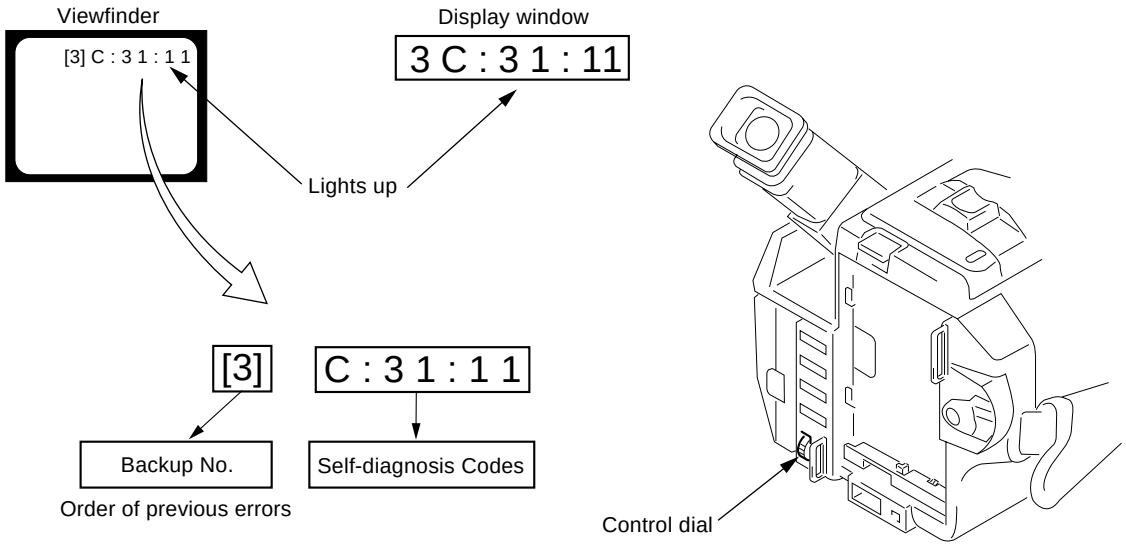

3-2. Switching of Backup No.

By rotating the control dial, past self-diagnosis codes will be shown in order. The backup No. in the [] indicates the order in which the problem occurred. (If the number of problems which occurred is less than 6, only the number of problems which occurred will be shown.)

[1] : Occurred first time
[2] : Occurred second time
[3] : Occurred third time
[4] : Occurred fourth time
[5] : Occurred fifth time
[6] : Occurred the last time

3-3. End of Display

Turning OFF the power supply will end the service mode display.

Note: The “self-diagnosis display” data will be backed up by the coin-type lithium battery (CF-69/71 board BH001). When this coin-type lithium battery is disconnected, the “self-diagnosis display” data will be lost by initialization.

4. Self-diagnosis Code Table

Self-diagnosis Code				Symptom/State	Correction
Repaired by:	Block Function		Detailed Code		
C	2	1	0 0	Condensation.	Remove the cassette, and insert it again after one hour.
C	2	2	0 0	Video head is dirty.	Clean with the optional cleaning cassette.
C	2	3	0 0	Non-standard battery is used.	Use the InfoLITHIUM battery.
C	3	1	1 0	LOAD direction. Loading does not complete within specified time	Load the tape again, and perform operations from the beginning.
C	3	1	1 1	UNLOAD direction. Loading does not complete within specified time	Load the tape again, and perform operations from the beginning.
C	3	1	2 0	T reel side tape slacking when unloading.	Load the tape again, and perform operations from the beginning.
C	3	1	2 1	S reel side tape slacking when unloading.	Load the tape again, and perform operations from the beginning.
C	3	1	2 2	T reel fault.	Load the tape again, and perform operations from the beginning.
C	3	1	2 3	S reel fault.	Load the tape again, and perform operations from the beginning.
C	3	1	3 0	FG fault when starting capstan.	Load the tape again, and perform operations from the beginning.
C	3	1	3 1	FG fault during normal capstan operations.	Load the tape again, and perform operations from the beginning.
C	3	1	4 0	FG fault when starting drum.	Load the tape again, and perform operations from the beginning.
C	3	1	4 1	PG fault when starting drum.	Load the tape again, and perform operations from the beginning.
C	3	1	4 2	FG fault during normal drum operations.	Load the tape again, and perform operations from the beginning.
C	3	1	4 3	PG fault during normal drum operations.	Load the tape again, and perform operations from the beginning.
C	3	1	4 4	Phase fault during normal drum operations.	Load the tape again, and perform operations from the beginning.
C	3	2	1 0	LOAD direction loading motor time-out.	Remove the battery or power cable, connect, and perform operations from the beginning.
C	3	2	1 1	UNLOAD direction loading motor time-out.	Remove the battery or power cable, connect, and perform operations from the beginning.
C	3	2	2 0	T reel side tape slacking when unloading.	Remove the battery or power cable, connect, and perform operations from the beginning.
C	3	2	2 1	S reel side tape slacking when unloading.	Remove the battery or power cable, connect, and perform operations from the beginning.
C	3	2	2 2	T reel fault.	Remove the battery or power cable, connect, and perform operations from the beginning.
C	3	2	2 3	S reel fault.	Remove the battery or power cable, connect, and perform operations from the beginning.
C	3	2	3 0	FG fault when starting capstan.	Remove the battery or power cable, connect, and perform operations from the beginning.
C	3	2	3 1	FG fault during normal capstan operations.	Remove the battery or power cable, connect, and perform operations from the beginning.
C	3	2	4 0	FG fault when starting drum.	Remove the battery or power cable, connect, and perform operations from the beginning.
C	3	2	4 1	PG fault when starting drum.	Remove the battery or power cable, connect, and perform operations from the beginning.
C	3	2	4 2	FG fault during normal drum operations.	Remove the battery or power cable, connect, and perform operations from the beginning.
C	3	2	4 3	PG fault during normal drum operations.	Remove the battery or power cable, connect, and perform operations from the beginning.
C	3	2	4 4	Phase fault during normal drum operations.	Remove the battery or power cable, connect, and perform operations from the beginning.

Self-diagnosis Code			Symptom/State	Correction
Repaired by:	Block Function	Detailed Code		
E	6 1	0 0	Difficult to adjust focus (Cannot initialize focus.)	Inspect the lens block focus reset sensor (Pin ⑨ of CN1551 of VC-235 board) when focusing is performed when the control dial is rotated in the focus manual mode and the focus motor drive circuit (IC1553 of VC-235 board) when the focusing is not performed. **Note:** Use the remote commander RM-95 only for the model without the focus dial.
E	6 1	1 0	Zoom operations fault (Cannot initialize zoom lens.)	Inspect the lens block zoom reset sensor (Pin ⑩ of CN1551 of VC-235 board) when zooming is performed when the zoom lens is operated and the zoom motor drive circuit (IC1553 of VC-235 board) when zooming is not performed.
E	6 2	0 0	Handshake correction function does not work well. (With pitch angular velocity sensor output stopped.)	Inspect pitch angular velocity sensor (SE201 of SE-104/113 board) peripheral circuits.
E	6 2	0 1	Handshake correction function does not work well. (With yaw angular velocity sensor output stopped.)	Inspect yaw angular velocity sensor (SE202 of SE-104/113 board) peripheral circuits.

SECTION 1
GENERAL

This section is extracted from DCR-TRV120E/ TRV125E/TRV320E instruction manual.

English

Welcome!

Congratulations on your purchase of this Sony Digital Handycam camcorder. With your Digital Handycam, you can capture life's precious moments with superior picture and sound quality.
Your Digital Handycam is loaded with advanced features, but at the same time it is very easy to use. You will soon be producing home video that you can enjoy for years to come.

WARNING

To prevent fire or shock hazard, do not expose the unit to rain or moisture.

To avoid electrical shock, do not open the cabinet.
Refer servicing to qualified personnel only.

NOTICE ON THE SUPPLIED AC POWER ADAPTOR FOR CUSTOMERS IN THE UNITED KINGDOM

A moulded plug complying with BS1363 is fitted to this equipment for your safety and convenience.

Should the fuse in the plug supplied need to be replaced, a 5 AMP fuse approved by ASTA or BSI to BS1362 (i.e., marked with ⊛ or ♡ mark) must be used.

If the plug supplied with this equipment has a detachable fuse cover, be sure to attach the fuse cover after you change the fuse. Never use the plug without the fuse cover. If you should lose the fuse cover, please contact your nearest Sony service station.

ATTENTION

The electromagnetic fields at the specific frequencies may influence the picture and sound of this digital camcorder.

For the customers in Germany

Directive: EMC Directive 89/336/EEC.
92/31/EEC
This equipment complies with the EMC regulations when used under the following circumstances:
• Residential area
• Business district
• Light-industry district
(This equipment complies with the EMC standard regulations EN55022 Class B.)

Русский

Добро пожаловать!

Поздравляем Вас с приобретением данной видеокамеры Digital Handycam фирмы Sony. С помощью Вашей видеокамеры Digital Handycam Вы сможете запечатлеть дорогие Вам мгновения жизни с превосходным качеством изображения и звука.
Ваша видеокамера Digital Handycam оснащена усовершенствованными функциями, но в то же время ее очень легко использовать. Вскоре Вы будете создавать семейные видеопрограммы, которыми можете наслаждаться последующие годы.

ПРЕДУПРЕЖДЕНИЕ

Для предотвращения возгорания или опасности электрического удара не выставляйте аппарат на дождь или влагу.

Во избежание поражения электрическим током не открывайте корпус.
За обслуживанием обращаться только к квалифицированному обслуживающему персоналу.

ВНИМАНИЕ

Электромагнитные поля на определенных частотах могут влиять на изображение и звук, воспроизводимое данной цифровой видеокамеры.

AS46

Checking supplied accessories

Make sure that the following accessories are supplied with your camcorder.

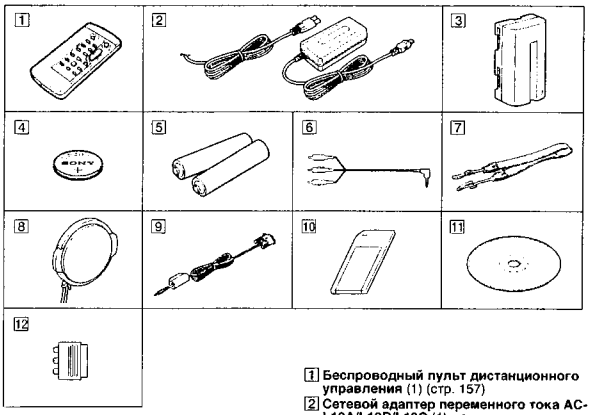

1 **Wireless Remote Commander** (1) (p. 157)
2 **AC-L10A/L10B/L10C AC power adaptor** (1), **Mains lead** (1) (p. 13)
3 **NP-F330 battery pack** (1) (p. 12, 13)
DCR-TRV120E/TRV320E
NP-F550 battery pack (1) (p. 12, 13)
DCR-TRV125E only
4 **CR2025 lithium battery** (1) (p. 125)
The lithium battery is already installed in your camcorder.
5 **R6 (Size AA) battery for Remote Commander** (2) (p. 158)
6 **A/V connecting cable** (1) (p. 38)
7 **Shoulder strap** (1) (p. 154)
8 **Lens cap** (1) (p. 21)
9 **PC serial cable** (1) (p. 112)
DCR-TRV320E only
10 **"Memory Stick"** (1) (p. 91)
DCR-TRV320E only
11 **Application software: PictureGear 4.1 Lite (CD-ROM)** (1) (p. 112)
DCR-TRV320E only
12 **21-pin adaptor** (1) (p. 39)

Contents of the recording cannot be compensated if recording or playback is not made due to a malfunction of the camcorder, video tape, etc.

Проверка прилагаемых принадлежностей

Убедитесь, что следующие принадлежности прилагаются к Вашей видеокамере.

1 **Беспроводный пульт дистанционного управления** (1) (стр. 157)
2 **Сетевой адаптер переменного тока AC-L10A/L10B/L10C** (1) **провод электропитания** (1) (стр. 13)
3 **Батарейный блок NP-F330** (1) (стр. 12, 13)
DCR-TRV120E/TRV320E
Батарейный блок NP-F550 (1) (стр. 12, 13)
Только DCR-TRV125E
4 **Литиевая батарейка CR2025** (1) (стр. 125)
Литиевая батарейка уже установлена в Вашей видеокамере.
5 **Батарейка R6 (размера AA) для пульта дистанционного управления** (2) (стр. 158)
6 **Соединительный кабель аудио/видео** (1) (стр. 38)
7 **Плечевой ремень** (1) (стр. 154)
8 **Крышка объектива** (1) (стр. 21)
9 **Кабель для последовательного подсоединения к ПК** (1) (стр. 112)
Только DCR-TRV320E
10 **"Memory Stick"** (1) (стр. 91)
Только DCR-TRV320E
11 **Прикладное программное обеспечение: PictureGear 4.1 Lite (CD-ROM)** (1) (стр. 112)
Только DCR-TRV320E
12 **21-штырьковый адаптер** (1) (стр. 39)

Содержание записи не может быть компенсировано в случае, если запись или воспроизведение не выполнены из-за неисправности видеокамеры, видеоленты и т.п.

English

Quick Start Guide

This chapter introduces you to the basic features of your camcorder. See the page in parentheses "( )" for more information.

1 Connecting the mains lead (p. 18)

Use the battery pack when using your camcorder outdoors (p. 12).

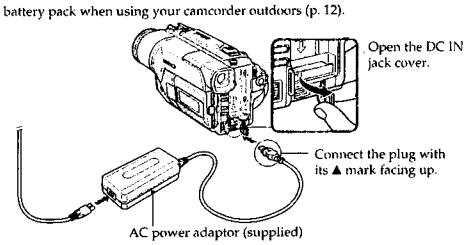

2 Inserting a cassette (p. 19)

1 Open the lid of the cassette compartment, and press EJECT. The compartment opens automatically.

2 Insert a cassette into the cassette compartment with its window facing out and the tab on the cassette up.

3 Close the cassette compartment by pressing the (PUSH) mark on the cassette compartment. The cassette compartment automatically goes down. Close the lid of the cassette compartment.

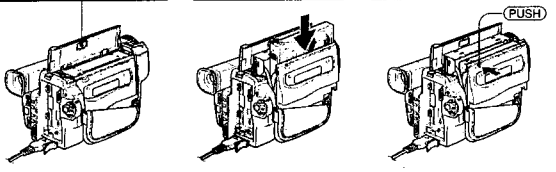

3 Recording a picture (p. 21)

1 Remove the lens cap.

2 Set the POWER switch to CAMERA while pressing the small green button.

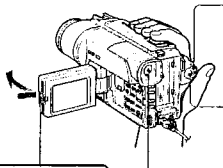

4 Press the red button. Your camcorder starts recording. To stop recording, press the red button again.

3 Open the LCD panel while pressing OPEN. The image you are trying to shoot appears on the LCD screen

Viewfinder
When the LCD panel is closed, use the viewfinder placing your eye against its eyecup. The picture in the viewfinder is black and white.

4 Monitoring the playback picture on the LCD screen (p. 33)

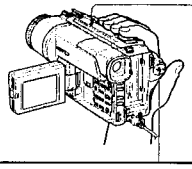

2 Press ◄◄ to rewind the tape.
REW

3 Press ► to start playback.
PLAY

1 Set the POWER switch to PLAYER while pressing the small green button.

Note
Do not pick up your camcorder by holding the viewfinder, the LCD panel or the battery pack.

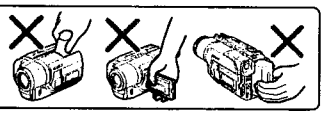

Using this manual

The instructions in this manual are for the three models listed in the table below. Before you start reading this manual and operating your camcorder, check the model number by looking at the bottom of your camcorder. The DCR-TRV320E is the model used for illustration purposes. Otherwise, the model name is indicated in the illustrations. Any differences in operation are clearly indicated in the text, for example, "DCR-TRV320E only."
As you read through this manual, buttons and settings on your camcorder are shown in capital letters.
e.g. Set the POWER switch to CAMERA.
When you carry out an operation, you can hear a beep sound to indicate that the operation is being carried out.

Использование данного руководства

Инструкции в данном руководстве предназначены для три моделей, перечисленных в таблице ниже. Перед тем, как прочесть данное руководство и начать эксплуатацию Вашей видеокамеры, проверьте номер модели на нижней стороне Вашей видеокамеры. В качестве иллюстративных целей используется DCR-TRV320E. В других случаях номер модели указан на рисунках. Какие-либо расхождения в эксплуатации четко указаны в тексте, например, "только DCR-TRV320E."
При чтении данного руководства учитывайте, что кнопки и установки на видеокамере показаны заглавными буквами.
Прим. Установите выключатель POWER в положение CAMERA.
При выполнении операции на видеокамере Вы сможете услышать зуммерный сигнал, подтверждающий выполнение операции.

Types of differences/Типы различий

DCR-	TRV120E	TRV125E	TRV320E
MEMORY mark* (on the POWER switch) Знак MEMORY* (на переключателе POWER)	—	—	●
Self-timer Таймер самозапуска	—	—	●
Digital zoom Цифровой вариообъектив	100×	125×	100×

● Provided/Имеется
— Not provided/Отсутствует

* The model with MEMORY marked on the POWER switch is provided with memory functions. See page 91 for details.

* В моделях со знаком MEMORY на переключателе POWER имеются функции памяти. Подробные сведения приведены на стр. 91.

Before using your camcorder

With your digital camcorder, you can use Hi8 Hi8/Digital8 video cassettes. Your camcorder records and plays back pictures in the Digital8 system. Also, your camcorder plays back tapes recorded in the Hi8 Hi8/standard 8 (analog) system. You, however, cannot use the functions in "Advanced Playback Operations" on page 62 to 69 for playback in the Hi8 Hi8/standard 8 system. To enable smooth transition, we recommend that you do not mix pictures recorded in the Hi8 Hi8/standard 8 with the Digital8 system on a tape.

Перед началом эксплуатации Вашей видеокамеры

Для Вашей цифровой видеокамеры Вы можете использовать видеокассеты Hi8 Hi8/Digital8. Ваша видеокамера записывает и воспроизводит изображения в цифровой системе Digital8. Также, Ваша видеокамера воспроизводит ленты, записанные в системе Hi8 Hi8/8 (аналоговой). Однако, Вы не можете использовать функции в разделе "Усовершенствованные операции воспроизведения" на страницах с 62 по 69 для воспроизведения в системе Hi8 Hi8/8. Для обеспечения плавного перехода рекомендуется не смешивать на ленте изображения, записанные в системе Hi8 Hi8/8, с изображениями, записанными в цифровой системе Digital8.

Using this manual

Note on TV colour systems

TV colour systems differ from country to country. To view your recordings on a TV, you need a PAL system-based TV.

Copyright precautions

Television programmes, films, video tapes, and other materials may be copyrighted. Unauthorized recording of such materials may be contrary to the provision of the copyright laws.

Precautions on camcorder care

- **The LCD screen and the viewfinder are manufactured using high-precision technology. However, there may be some tiny black points and/or bright points (red, blue, green or white) that constantly appear on the LCD screen and in the viewfinder. These points occur normally in the manufacturing process and do not affect the recorded picture in any way. Effective ratio of pixels and/or screen are 99.99% or more.**
- Do not let your camcorder get wet. Keep your camcorder away from rain and sea water. Letting your camcorder get wet may cause your camcorder to malfunction. Sometimes this malfunction cannot be repaired **[a]**.
- Never leave your camcorder exposed to temperatures above 60°C (140°F), such as in a car parked in the sun or under direct sunlight **[b]**.
- Do not place your camcorder so as to point the viewfinder, the LCD screen or lens toward the sun. The inside of the viewfinder, LCD screen or lens may be damaged **[c]**.

Использование данного руководства

Примечание по системам цветного телевидения

Системы цветного телевидения отличаются в зависимости от страны. Для просмотра Ваших записей на экране телевизора Вам необходимо использовать телевизор, основанный на системе PAL.

Предостережение об авторском праве

Телевизионные программы, кинофильмы, видеоленты и другие материалы могут быть защищены авторским правом. Нелицензированная запись таких материалов может противоречить положениям закона об авторском праве.

Меры предосторожности при уходе за видеокамерой

- **Экран ЖКД и видоискатель изготовлены с помощью высокоприцизионной технологии. Однако на экране ЖКД и в видоискателе могут постоянно появляться черные и/или яркие цветные точки (красные, синие, зеленые или белые). Появление этих точек вполне нормально для процесса съемки и никоим образом не влияет на записываемое изображение. Свыше 99,99% экрана предназначено для эффективного использования.**
- Не допускайте, чтобы видеокамера становилась влажной. Предохраняйте видеокамеру от дождя и морской воды. Если Вы намочите видеокамеру, то это может привести к неисправности аппарата, которая не всегда может быть устранена **[a]**.
- Никогда не оставляйте видеокамеру в месте с температурой выше 60°C (140°F), как, например, в автомобиле, оставленном на солнце или под прямым солнечным светом **[b]**.
- Не располагайте свою видеокамеру таким образом, чтобы видоискатель или экран ЖКД были направлены на солнце. Иначе может быть повреждено внутреннее устройство видоискателя или экрана ЖКД **[c]**.

[a] **[b]** **[c]**

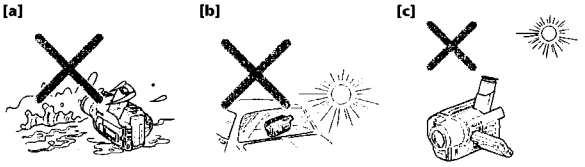

Step 1 Preparing the power supply

Installing the battery pack

Install the battery pack to use your camcorder outdoors.

Slide the battery pack down until it clicks.

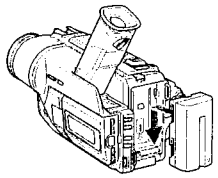

To remove the battery pack
Slide the battery pack out in the direction of the arrow while pressing BATT RELEASE down.

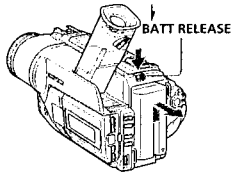

After installing the battery pack
Do not carry your camcorder by holding the battery pack. If you do so, the battery pack may slide off your camcorder unintentionally, damaging your camcorder.

Пункт 1 Подготовка источника питания

Установка батарейного блока

Установите батарейный блок для того, чтобы использовать Вашу видеокамеру вне помещения.

Передвиньте батарейный блок вниз, так чтобы он защелкнулся на месте.

Для снятия батарейного блока
Передвиньте батарейный блок в направлении стрелки, нажав кнопку BATT RELEASE вниз.

После установки батарейного блока
Не переносите свою видеокамеру, взявшись за батарейный блок. Если Вы так сделаете, батарейный блок может непроизвольно соскользнуть с Вашей видеокамеры и повредить ее.

Step 1 Preparing the power supply

Charging the battery pack

Use the battery pack after charging it for your camcorder.
Your camcorder operates only with the "InfoLITHIUM" battery pack (L series).
(1) Open the DC IN jack cover and connect the AC power adaptor supplied with your camcorder to the DC IN jack with the plug's ▲ mark facing up.
(2) Connect the mains lead to the AC power adaptor.
(3) Connect the mains lead to the mains.
(4) Set the POWER switch to OFF (CHARGE). Charging begins. The remaining battery time is indicated in minutes on the display window.
When the remaining battery indicator changes to , **normal charge** is completed. To fully charge the battery **(full charge)**, leave the battery pack attached for about 1 hour after normal charge is completed until FULL appears in the display window. Fully charging the battery allows you to use the battery longer than usual.

Пункт 1 Подготовка источника питания

Зарядка батарейного блока

Используйте батарейный блок для Вашей видеокамеры после его зарядки.
Ваша видеокамера работает только с батарейным блоком "InfoLITHIUM" (серии L).
(1) Откройте крышку гнезда DC IN и подсоедините сетевой адаптер переменного тока, прилагаемый к Вашей видеокамере, к гнезду DC IN, так чтобы штекер ▲ был направлен вверх.
(2) Подсоедините провод электропитания к сетевому адаптеру переменного тока.
(3) Подсоедините провод электропитания к сетевой розетке.
(4) Установите переключатель POWER в положение OFF (CHARGE). Начнется зарядка. В окошке дисплея будет отображаться время оставшегося заряда в минутах.
Если индикатор оставшегося заряда изменится на , **это значит**, что нормальная зарядка завершена. Для полной зарядки батарейного блока **(полная зарядка)** оставьте батарейный блок прикрепленным на месте приблизительно на один час после завершения нормальной зарядки до тех пор, пока в окошко дисплея не появится индикация FULL. Полная зарядка батарейного блока позволяет Вам использовать батарейный блок дольше чем обычно.

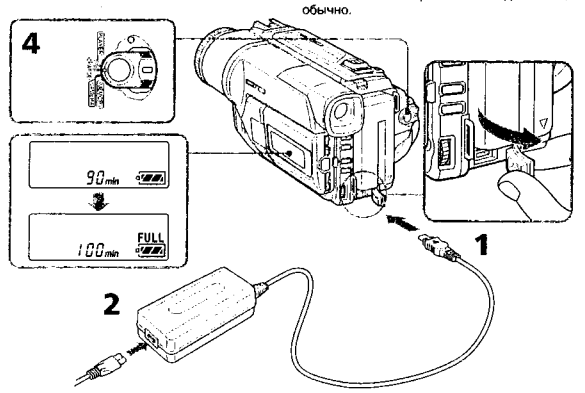

After charging the battery pack
Disconnect the AC power adaptor from the DC IN jack on your camcorder.

Notes
- Prevent metallic objects from coming into contact with the metal parts of the DC plug of the AC power adaptor. This may cause a short-circuit, damaging the AC power adaptor.
- Keep the battery pack dry.
- When the battery pack is not to be used for a long time, charge the battery pack once fully, and then use it until it fully discharges again. Keep the battery pack in a cool place.

When the battery pack is charged fully
The LCD back light of the display window will be turned off.

Remaining battery time indicator
The remaining battery time indicator in the display window roughly indicates the recording time with the viewfinder.

Battery pack
The supplied battery pack is charged a little.

Until your camcorder calculates the actual remaining battery time
"– – – – min" appears in the display window.

While charging the battery pack, no indicator appears or the indicator flashes in the display window in the following cases
– The battery pack is not installed correctly.
– The AC power adaptor is disconnected.
– Something is wrong with the battery pack.

После зарядки батарейного блока
Отсоедините сетевой адаптер переменного тока от гнезда DC IN на Вашей видеокамере.

Примечания
- Не допускайте контакта металлических предметов с металлическими частями штекера постоянного тока сетевого адаптера. Это может привести к короткому замыканию и повреждению Вашего сетевого адаптера.
- Содержите батарейный блок в сухом состоянии.
- Если батарейный блок предполагается не использовать длительное время, зарядите его полностью один раз, а затем используйте до тех пор, пока он снова полностью не разрядится. Храните батарейный блок в прохладном месте.

Если батарейный блок заряжен полностью
Задняя подсветка ЖКД в окошке дисплея выключится.

Индикатор времени оставшегося заряда батарейного блока
Индикатор времени оставшегося заряда батарейного блока в окошке дисплея приблизительно указывает время записи с помощью видоискателя.

Батарейный блок
Батарейный блок уже немного заряжен на предприятии-изготовителе.

До тех пор, пока Ваша видеокамера определит действительное время оставшегося заряда батарейного блока
В окошке дисплея будет отображаться индикация "– – – – min".

Во время зарядки батарейного блока никакой индикатор не появляется, или индикатор будет мигать в окошке дисплея в следующих случаях
– Батарейный блок установлен не правильно.
– Отсоединен сетевой адаптер переменного тока.
– Что-то не в порядке с батарейным блоком.

Charging time/Время зарядки

Battery pack/ Батарейный блок	Full charge (Normal charge)/ Полная зарядка (нормальная зарядка)
NP-F330 [1]	150 (90)
NP-F530/F550 [2]	210 (150)
NP-F730/F750	300 (240)
NP-F930/F950	390 (330)
NP-F960	420 (360)

Approximate number of minutes to charge an empty battery pack
[1] Supplied with DCR-TRV120E/TRV320E
[2] Supplied with DCR-TRV125E

Приблизительное время в минутах для зарядки полностью разряженного батарейного блока
[1] Прилагается к DCR-TRV120E/TRV320E
[2] Прилагается к DCR-TRV125E

Recording time/Время записи

DCR-TRV120E/TRV125E

Battery pack/ Батарейный блок	Recording with the viewfinder/ Запись с помощью видоискателя		Recording with the LCD screen/ Запись с помощью экрана ЖКД	
	Continuous [3] Непрерывная [3]	Typical [4] Типичная [4]	Continuous [3] Непрерывная [3]	Typical [4] Типичная [4]
NP-F330 [1]	100 (90)	55 (50)	90 (80)	50 (45)
NP-F530	165 (150)	95 (85)	145 (130)	80 (75)
NP-F550 [2]	200 (180)	115 (100)	175 (160)	100 (90)
NP-F730	335 (300)	190 (170)	300 (270)	170 (155)
NP-F750	410 (365)	235 (210)	365 (325)	210 (185)
NP-F930	535 (480)	305 (275)	475 (430)	270 (245)
NP-F950	630 (570)	360 (325)	555 (500)	315 (285)
NP-F960	740 (665)	420 (380)	660 (590)	375 (335)

DCR-TRV320E

Battery pack/ Батарейный блок	Recording with the viewfinder/ Запись с помощью видоискателя		Recording with the LCD screen/ Запись с помощью экрана ЖКД	
	Continuous [3] Непрерывная [3]	Typical [4] Типичная [4]	Continuous [3] Непрерывная [3]	Typical [4] Типичная [4]
NP-F330 [1]	105 (95)	60 (55)	85 (75)	50 (40)
NP-F530	175 (160)	100 (90)	140 (125)	80 (70)
NP-F550 [2]	210 (190)	120 (110)	170 (155)	95 (90)
NP-F730	365 (325)	210 (185)	290 (260)	165 (150)
NP-F750	440 (395)	250 (225)	355 (315)	200 (180)
NP-F930	575 (520)	325 (300)	460 (415)	260 (235)
NP-F950	675 (610)	385 (345)	540 (485)	305 (275)
NP-F960	790 (710)	450 (405)	640 (580)	365 (330)

Approximate number of minutes when you use a fully charged battery

Numbers in parentheses "( )" indicate the time using a normally charged battery.

[1] Supplied with DCR-TRV120E/TRV320E
[2] Supplied with DCR-TRV125E
[3] Approximate continuous recording time at 25°C (77°F). The battery life will be shorter if you use your camcorder in a cold environment.
[4] Approximate number of minutes when recording while you repeat recording start/stop, zooming and turning the power on/off. The actual battery life may be shorter.

Приблизительное время в минутах при использовании полностью заряженного батарейного блока

Числа в скобках "( )" указывают время при использовании батарейного блока с нормальной зарядкой.

[1] Прилагается к DCR-TRV120E/TRV320E
[2] Прилагается к DCR-TRV125E
[3] Приблизительное время непрерывной записи при температуре 25°C (77°F). При использовании видеокамеры в холодных условиях срок службы батарейного блока будет короче.
[4] Приблизительное время в минутах при записи с неоднократным пуском/остановкой записи, наездом видеокамеры и включением/выключением питания. Фактический срок службы заряда батарейного блока может быть короче.

Playing time/Время воспроизведения

DCR-TRV120E/TRV125E

Battery pack/ Батарейный блок	Playing time on LCD screen/ Время воспроизведения на экране ЖКД	Playing time with LCD closed/ Время воспроизведения при закрытом ЖКД
NP-F330 [1]	85 (75)	95 (85)
NP-F530	140 (125)	160 (145)
NP-F550 [2]	170 (155)	195 (175)
NP-F730	290 (260)	325 (290)
NP-F750	355 (315)	395 (355)
NP-F930	460 (415)	515 (465)
NP-F950	540 (485)	610 (550)
NP-F960	640 (580)	720 (645)

DCR-TRV320E

Battery pack/ Батарейный блок	Playing time on LCD screen/ Время воспроизведения на экране ЖКД	Playing time with LCD closed/ Время воспроизведения при закрытом ЖКД
NP-F330 [1]	85 (75)	100 (90)
NP-F530	135 (120)	170 (155)
NP-F550 [2]	165 (150)	205 (185)
NP-F730	285 (255)	350 (310)
NP-F750	345 (305)	425 (380)
NP-F930	450 (405)	555 (500)
NP-F950	525 (470)	650 (590)
NP-F960	625 (560)	765 (685)

Approximate number of minutes when you use a fully charged battery

Numbers in parentheses "( )" indicate the time using a normally charged battery. The battery life will be shorter if you use your camcorder in a cold environment.

[1] Supplied with DCR-TRV120E/TRV320E
[2] Supplied with DCR-TRV125E

Приблизительное время в минутах при использовании полностью заряженного батарейного блока

Цифры в скобках "( )" указывают время при использовании батарейного блока с нормальной зарядкой. При использовании видеокамеры в холодных условиях срок службы батарейного блока будет короче.

[1] Прилагается к DCR-TRV120E/TRV320E
[2] Прилагается к DCR-TRV125E

The remaining battery time indicator
The indicator may not be correct, depending on the conditions in which you are recording. When you close the LCD panel and open it again, it takes about 1 minute for the correct remaining battery time to be displayed.

The power may go off although the battery remaining indicator indicates that the battery pack has enough power to operate.
Charge the battery pack fully again so that the indication on the battery remaining indicator is correct.

What is "InfoLITHIUM"?
The "InfoLITHIUM" is a lithium ion battery pack which can exchange data such as battery consumption with compatible electronic equipment. This unit is compatible with the "InfoLITHIUM" battery pack (L series). Your camcorder operates only with the "InfoLITHIUM" battery. "InfoLITHIUM" battery packs have the (i) mark.
"InfoLITHIUM" is a trademark of Sony Corporation.

По индикатору времени оставшегося заряда батарейного блока во время записи
Индикатор может быть неправильным в зависимости от условий, в которых выполняется запись. Если Вы закроете панель ЖКД и откроете ее снова, то пройдет около 1 минуты, прежде чем на дисплее появится правильное время оставшегося заряда батарейного блока.

Заряд может быть израсходован, хотя индикатор времени оставшегося заряда батарейного блока будет показывать, что заряд батарейного блока вполне достаточный для его эксплуатации.
Зарядите батарейный блок еще раз, так чтобы показание на индикаторе оставшегося заряда батарейного блока было правильным.

Что такое "InfoLITHIUM"?
"InfoLITHIUM" представляет собой литиево-ионный батарейный блок, который может обмениваться данными, такими как потребление заряда батарейного блока, с совместимой электронной аппаратурой. Это устройство совместимо с батарейным блоком "InfoLITHIUM" (серии L). Ваша видеокамера работает только с батарейным блоком "InfoLITHIUM". На батарейных блоках "InfoLITHIUM" серии L имеется знак (i) InfoLITHIUM.
"InfoLITHIUM" является торговой маркой корпорации Sony Corporation.

Step 1 Preparing the power supply

Connecting to the mains

When you use your camcorder for a long time, we recommend that you power it from the mains using the AC power adaptor.

(1) Open the DC IN jack cover, and connect the AC power adaptor to the DC IN jack on your camcorder with the plug's ▲ mark facing up.
(2) Connect the mains lead to the AC power adaptor.
(3) Connect the mains lead to the mains.

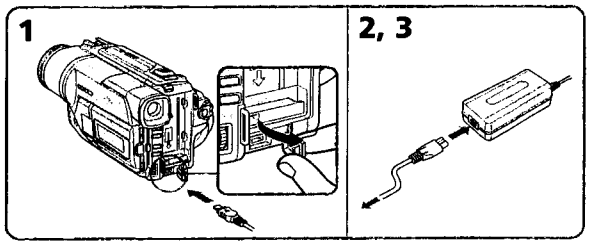

PRECAUTION
The set is not disconnected from the AC power source (the mains) as long as it is connected to the mains, even if the set itself has been turned off.

Notes
- The AC power adaptor can supply power even if the battery pack is attached to your camcorder.
- The DC IN jack has "source priority". This means that the battery pack cannot supply any power if the mains lead is connected to the DC IN jack, even when the mains lead is not plugged into the mains.

Using a car battery
Use Sony DC Adaptor/Charger (not supplied).

Пункт 1 Подготовка источника питания

Подсоединение к сетевой розетке

Если Вы собираетесь использовать видеокамеру длительное время, рекомендуется использовать питание от электрической сети с помощью сетевого адаптера переменного тока.

(1) Откройте крышку гнезда DC IN и подсоедините сетевой адаптер переменного тока к гнезду DC IN на Вашей видеокамеру, так чтобы знак ▲ на штекере был обращен вверх.
(2) Подсоедините провод электропитания к сетевому адаптеру переменного тока.
(3) Подсоедините провод электропитания к сетевой розетке.

ПРЕДОСТЕРЕЖЕНИЕ
Аппарата не отключается от источника переменного тока (электрииеской сети) до тех пор, пока он подсоединен к электрической сети, даже если сам аппарат и выключен.

Примечания
- Питание от сетевого адаптера переменного тока может подаваться даже в случае, если батарейный блок прикреплен к Вашей видеокамере.
- Гнездо DC IN имеет "приоритет источника". Это значит, что питание от батарейного блока не может подаваться, если провод электропитания подсоединен к гнезду DC IN, даже если провод электропитания и не подсоединен к сетевой розетке.

Использование автомобильного аккумулятора
Используйте адаптер/зарядное устройство постоянного тока фирмы Sony (не прилагается).

Step 2 Inserting a cassette

We recommend using Hi8 Hi8/Digital8 video cassettes.

(1) Prepare the power supply. (p. 12)
(2) Open the lid of the cassette compartment, and press EJECT. The cassette compartment opens automatically.
(3) Insert a cassette with its window facing out and the tab on the cassette up.
(4) Close the cassette compartment by pressing the PUSH mark on the cassette compartment. The cassette compartment automatically goes down.
(5) Close the lid of the cassette compartment.

Пункт 2 Установка кассеты

Рекомендуется использовать видеокассеты типа Hi8 Hi8/Digital8.

(1) Приготовьте источник питания (стр. 12).
(2) Откройте крышку кассетного отсека и нажмите кнопку EJECT. Кассетный отсек автоматически откроется.
(3) Вставьте кассету, так чтобы окошку было обращено наружу, а лепесток на кассете вверх.
(4) Закройте кассетный отсек, нажав метку PUSH на отсеке. Кассетный отсек автоматически закроется.
(5) Закройте крышку кассетного отсека.

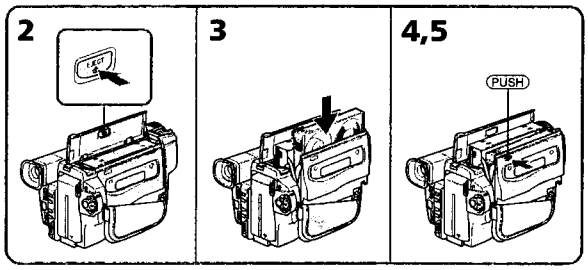

To eject a cassette
Follow the procedure above, and eject the cassette in step **3**.

Для извлечения кассеты
Выполните приведенную выше процедуру и вытолкните кассету в пункте **3**.

Step 2 Inserting a cassette

Notes
- Do not press the cassette compartment down. Doing so may cause malfunction.
- Your camcorder records pictures in the Digital8 system.
- The recording time when you use your camcorder is half of indicated time on Hi8 Hi8 tape. If you select the LP mode in the menu settings, 3/4 of indicated time on Hi8 Hi8 tape.
- If you use standard 8 8 tape, be sure to play back the tape on this camcorder. Mosaic-pattern noise may appear when you play back standard 8 8 tape on other camcorders (including other DCR-TRV120E/TRV125E/TRV320E).
- The cassette compartment may not be closed when you press any part of the lid other than the PUSH mark.
- Do not pick up your camcorder by holding the lid of the cassette compartment.

Пункт 2 Установка кассеты

Примечания
- Не нажимайте вниз кассетный отсек. Это может привести к неисправности.
- Ваша видеокамера выполняет запись изображений в системе Digital8.
- Время записи при использовании Вашей цифровой видеокамеры в два раза меньше времени, указанного на ленте Hi8 Hi8. Если Вы выберите режим LP в установках, то время записи буде равно 3/4 меньше времени, указанного на ленте Hi8 Hi8.
- Если Вы используете стандартную ленту 8 8, то ее рекомендуется воспроизводить на этой же видеокамере. Записанные с помощью Вашей видеокамеры, на Вашей же видеокамере. В случае воспроизведения стандартных лент типа 8 8 на других видеокамерах, могут появиться помехи мозаичного типа (включая другие видеокамеры DCR-TRV120E/TRV125E/TRV320E).
- Кассетный отсек может не закрыться, если Вы нажмете на какое-либо другое место на крышке, а не на метку PUSH.
- Не поднимайте видеокамеру за крышку кассетного отсека.

To prevent accidental erasure
Slide the write-protect tab on the cassette to expose the red mark.

Для предотвращения случайного стирания
Передвиньте лепесток защиты записи на кассете, так чтобы появилась красная метка.

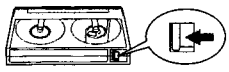

— Recording – Basics —

Recording a picture

Your camcorder automatically focuses for you.

(1) Remove the lens cap by pressing both knobs on its sides and attach the lens cap to the grip strap.
(2) Install the power source and insert a cassette. See "Step 1" and "Step 2" for more information (p. 12 to 20).
(3) Set the POWER switch to CAMERA while pressing the small green button. Your camcorder is set to the standby mode.
(4) Open the LCD panel while pressing OPEN. The viewfinder automatically turns off.
(5) Press START/STOP. Your camcorder starts recording. The "REC" indicator appears. The camera recording lamp located on the front of your camcorder lights up. To stop recording, press START/STOP again.
The recording lamp lights up in the viewfinder when you record with the viewfinder.

— Запись – Основные положения —

Запись изображения

Ваша видеокамера автоматически выполняет фокусировку за Вас.

(1) Снимите крышку объектива, нажав обе кнопки на ее кромке, и прикрепите крышку объектива к ремню для захвата.
(2) Установите источник питания и вставьте кассету. Подробные сведения приведены в "Пункте 1" и "Пункте 2" (стр. 12 – 20).
(3) Нажав маленькую зеленую кнопку, установите переключатель POWER в положение CAMERA. Ваша видеокамера переключится в режим ожидания.
(4) Нажав кнопку OPEN, откройте панель ЖКД. Видоискатель выключится автоматически.
(5) Нажмите кнопку START/STOP. Ваша видеокамера начнет запись. Появится индикатор "REC". Высветится также лампочка записи, расположенная на передней панели видеокамеры. Для остановки записи нажмите кнопку START/STOP еще раз.
При записи с помощью видоискателя, внутри него высветится лампочка записи.

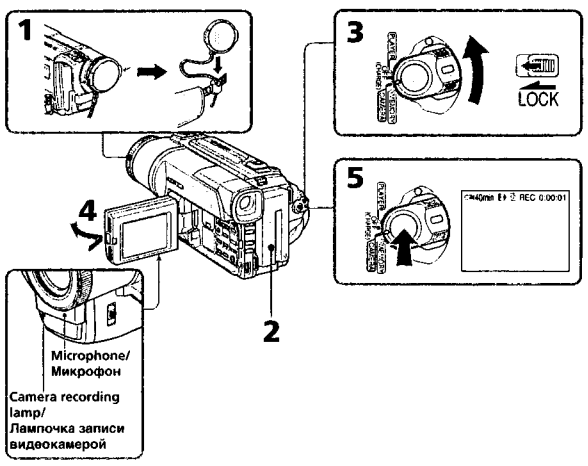

Notes
- Fasten the grip strap firmly.
- Do not touch the built-in microphone during recording.

Note on Recording mode
Your camcorder records and plays back in the SP (standard play) mode and in the LP (long play) mode. Select SP or LP in the menu settings (p. 76). In the LP mode, you can record 1.5 times as long as in the SP mode. When you record a tape in the LP mode on your camcorder, we recommend that you play back the tape on your camcorder.

Note on LOCK (DCR-TRV320E only)
When you slide LOCK to the left, the POWER switch can no longer be set to MEMORY accidentally. The LOCK is released as a default setting.

To enable smooth transition
You can make the transition between the last scene you recorded and the next scene smooth as long as you do not eject the cassette if you turn off your camcorder. When you change the battery pack, set the POWER switch to OFF (CHARGE).

If you leave your camcorder in the standby mode for 3 minutes
Your camcorder automatically turns off. This is to save battery power and to prevent battery and tape wear. To resume the standby mode, set the POWER switch to OFF (CHARGE) once, then turn it to CAMERA again.

Примечания
- Плотно пристегните ремень для захвата видеокамеры.
- Не прикасайтесь к встроенному микрофону во время записи.

Примечание по режиму записи
Ваша видеокамера выполняет запись и воспроизведение в режиме SP (стандартное воспроизведение) и в режиме LP (долгоиграющее воспроизведение). Выберите команду SP или LP в установках меню (стр. 76). В режиме LP Вы можете выполнять запись в 1,5 раза дольше по времени, чем в режиме SP. При выполнении на Вашей видеокамере записи на ленту в режиме LP рекомендуется воспроизводить эту ленту также на Вашей видеокамере.

Примечание по режиму LOCK (только DCR-TRV320E)
Если Вы передвинете переключатель LOCK влево, переключатель POWER уже не может быть случайно установлен в положение MEMORY. Режим LOCK будет устанавливаться по умолчанию.

Для обеспечения плавного перехода
Вы можете выполнять плавный переход между последним записанным эпизодом и следующим эпизодом до тех пор, пока не извлечете кассету при выключенном питании. При замене батарейного блока установите переключатель POWER в положение OFF (CHARGE).

Если Вы оставите Вашу видеокамеру в режиме ожидания на 3 минуты
Видеокамера выключится автоматически. Это предотвращает расход заряда батарейного блока и износ ленты. Для возобновления режима ожидания установите переключатель POWER в положение блока установите сначала переключатель POWER в положение OFF (CHARGE), а затем снова поверните его в положение CAMERA.

Adjusting the LCD screen

To adjust the brightness of the LCD screen, press either of the two buttons on LCD BRIGHT.
The LCD panel moves about 90 degrees to the viewfinder side and about 180 degrees to the lens side.
If you turn the LCD panel over so that it faces the other way, the ⊜ indicator appears on the LCD screen and in the viewfinder (**Mirror mode**).

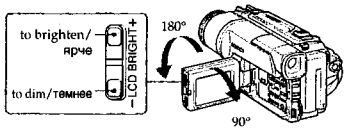

When closing the LCD panel, set it vertically until it clicks, and swing it into the camcorder body.

Note
When using the LCD screen except in the mirror mode, the viewfinder automatically turns off.

When you use the LCD screen outdoors in direct sunlight
The LCD screen may be difficult to see. If this happens, we recommend that you use the viewfinder.

Picture in the mirror mode
The picture on the LCD is a mirror-image. However, the picture will be normal when recorded.

During recording in the mirror mode
You cannot operate the ZERO SET MEMORY on the Remote Commander.

Indicators in the mirror mode
The STBY indicator appears as ▮▮● and REC as ●. Some of other indicators appear mirror-reversed and others are not displayed.

Регулировка экрана ЖКД

Для регулировки яркости экрана ЖКД нажмите одну из кнопок на LCD BRIGHT.
Панель ЖКД может передвигаться примерно на 90 градусов в сторону видоискателя и примерно на 180 градусов в сторону объектива.
Если Вы повернете панель ЖКД так, что она будет направлена в другую сторону, на экране ЖКД появится индикатор ⊜ (**Зеркальный режим**).

При закрывании панели ЖКД установите ее вертикально, пока не раздастся щелчок, а затем присоедините ее к корпусу видеокамеры.

Примечание
При использовании экрана ЖКД видоискатель автоматически выключается, кроме зеркального режима.

Если Вы используете экран ЖКД вне помещения под прямым солнечным светом
Возможно будет трудно разглядеть экран ЖКД. В этом случае рекомендуется использовать видоискатель.

Изображение в зеркальном режиме
Изображение на экране ЖКД будет отображаться зеркально. Однако запись изображения будет нормальной.

Во время записи в зеркальном режиме Вы не можете оперировать кнопкой ZERO SET MEMORY на пульте дистанционного.

Индикаторы в зеркальном режиме
Индикатор STBY появится в виде ▮▮●, а индикатор REC в виде ●. Некоторые другие индикаторы появятся в зеркально отображенном виде, а некоторые из них не будут отображаться совсем.

After recording

(1) Set the POWER switch to OFF (CHARGE).
(2) Close the LCD panel.
(3) Eject the cassette.

Using the zoom feature

Move the power zoom lever a little for a slower zoom. Move it further for a faster zoom.
Using the zoom function sparingly results in better-looking recordings.
"T" side: for telephoto (subject appears closer)
"W" side: for wide-angle (subject appears farther away)

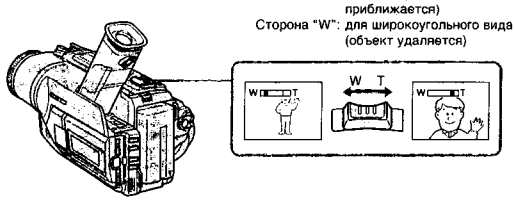

Zoom greater than 25× is performed digitally. To activate digital zoom, select the digital zoom power in D ZOOM in the menu settings. (p. 76)
The picture quality deteriorates as the picture is processed digitally.

The right side of the bar shows the digital zooming zone.
The digital zooming zone appears when you select the digital zoom power in D ZOOM in the menu settings./
Правая сторона полосы на экране показывает зону цифровой трансфокации.
Если Вы выберите приводной цифровой вариообъектив D ZOOM в установках меню, появится зона цифровой трансфокации.

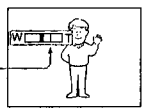

После записи

(1) Установите переключатель POWER в положение OFF (CHARGE).
(2) Закройте панель ЖКД.
(3) Извлеките кассету.

Использование функции наезда видеокамеры

Передвиньте рычаг приводного вариообъектива слегка для относительно медленного наезда видеокамеры.
Передвиньте его сильнее для ускоренного наезда видеокамеры.
Использование функции наезда видеокамеры в небольшом количестве обеспечивает наилучшие результаты.
Сторона "T": для телефото (объект приближается)
Сторона "W": для широкоугольного вида (объект удаляется)

Наезд видеокамеры более 25× выполняется цифровым методом. Для приведения в действие цифрового вариообъектива выберите приводной цифровой вариообъектив D ZOOM в установках меню (стр. 76). Поскольку обработка изображения выполняется цифровым способом, качество изображения несколько ухудшится.

Notes on digital zoom
- Digital zoom starts to function when zoom exceeds 25×.
- The picture quality deteriorates as you go toward the "T" side.

When you shoot close to a subject
If you cannot get a sharp focus, move the power zoom lever to the "W" side until the focus is sharp. You can shoot a subject that is at least about 80 cm (about 2 feet 5/8 inch) away from the lens surface in the telephoto position, or about 1 cm (about 1/2 inch) away in the wide-angle position.

To record pictures with the viewfinder – adjusting the viewfinder

If you record pictures with the LCD panel closed, check the picture with the viewfinder. Adjust the viewfinder lens to your eyesight so that the indicators in the viewfinder come into sharp focus.

Lift up the viewfinder and move the viewfinder lens adjustment lever.

Примечания к наезду видеокамеры цифровым методом
- Цифровой вариообъектив начинает срабатывать в случае, если наезд видеокамеры превышает 25×.
- Качество изображения ухудшается по мере приближения к стороне "T".

При съемке объекта с близкого положения
Если Вы не можете получить четкой фокусировки, передвиньте рычаг приводного вариообъектива сторону "W" до получения четкой фокусировки. Вы можете выполнять съемку объекта в положении телефото, который отстоит по крайней мере на расстоянии 80 см от поверхности объектива или же около 1 см в положении широкоугольного вида.

Для записи изображений с помощью видоискателя – регулировка видоискателя

Если Вы будете записывать изображения при закрытой панели ЖКД, проверьте изображение с помощью видоискателя. Отрегулируйте объектив видоискателя в соответствии со своим зрением, так чтобы индикаторы в видоискателе были четко сфокусированы.

Поднимите видоискатель и подвигайте рычаг регулировки объектива видоискателя.

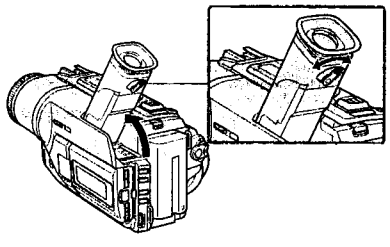

Indicators displayed in the recording mode

The indicators are not recorded on tape.

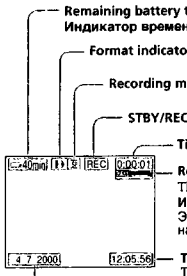

Time code (for tapes recorded in the Digital8 (i) system only)
The time code indicates the recording or playback time, "0:00:00" (hours:minutes: seconds) in CAMERA mode and "0:00:00:00" (hours:minutes:seconds:frames) in PLAYER mode. You cannot rewrite only the time code. When you play back tapes recorded in the Hi8/ standard 8 system, the tape counter appears. You cannot reset the time code or the tape counter.

Индикаторы, отображаемые в режиме записи

Индикаторы не записываются на ленту.

Код времени (только для лент, записанных в цифровой системе Digital8 (i))
Код времени указывает время записи или воспроизведения, "0:00:00" (часы: минуты: секунды) в режиме CAMERA и "0:00:00:00" (часы: минуты: секунды: кадры) в режиме PLAYER. Вы не можете перезаписать только код времени. При воспроизведении лент, записанных в системе Hi8/стандартной системе 8.
Вы не можете переустановить код времени.

Shooting backlit subjects – BACK LIGHT

When you shoot a subject with the light source behind the subject or a subject with a light background, use the backlight function.

Press BACK LIGHT in CAMERA or MEMORY (DCR-TRV320E only) mode.
The ◪ indicator appears on the LCD screen or in the viewfinder.
To cancel, press BACK LIGHT again.

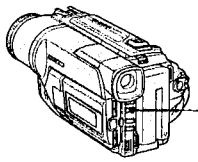

If you press EXPOSURE when shooting backlit subjects
The backlight function will be canceled.

Съемка объектов с задней подсветкой– BACKLIGHT

Если Вы выполняете съемку объекта с источником света позади него или же объекта со светлым фоном, используйте функцию задней подсветки.

Нажмите кнопку BACK LIGHT в режиме CAMERA или MEMORY (только DCR-TRV320E) ожидания.
В видоискателе или на экране ЖКД появится индикатор ◪.
Для отмены нажмите кнопку BACK LIGHT еще раз.

Если вы нажмете кнопку EXPOSURE при выполнении съемки объектов с задней подсветкой
Функция задней подсветки будет отменена.

Shooting in the dark – NightShot/Super NightShot

The NightShot function enables you to shoot a subject in a dark place. For example, you can satisfactorily record the environment of nocturnal animals for observation when you use this function.

While your camcorder is in CAMERA or MEMORY (DCR-TRV320E only) mode, slide NIGHTSHOT to ON.
[50] and "NIGHTSHOT" indicators flash on the LCD screen or in the viewfinder.
To cancel the NightShot function, slide NIGHTSHOT to OFF.

Using SUPER NIGHTSHOT
The Super NightShot mode makes subjects up to 16 times brighter than those recorded in the NightShot mode.

(1) Slide NIGHTSHOT to ON in CAMERA mode. [50] indicator appears on the LCD screen or in the viewfinder.
(2) Press SUPER NIGHTSHOT. S[50] and "SUPER NIGHTSHOT" indicators flash on the LCD screen or in the viewfinder.
To cancel the Super NightShot mode, press SUPER NIGHTSHOT again.

Using the NightShot Light
The picture will be clearer with the NightShot Light on. To enable NightShot Light, set N.S.LIGHT to ON in the menu settings (p. 76).

Съемка в темноте – Ночная съемка/ Ночная суперсъемка

Функция ночной съемки позволяет Вам выполнять съемку объектов в темных местах. Например, Вы сможете с успехом выполнять съемку ночных животных для наблюдения при использовании данной функции.

В то время, когда видеокамера находится в режиме CAMERA или MEMORY (только DCR-TRV320E), передвиньте переключатель NIGHTSHOT в положение ON.
Индикаторы [50] и "NIGHTSHOT" начнут мигать на экране ЖКД или в видоискателе.
Для отмены функции ночной съемки передвиньте переключатель NIGHTSHOT в положении OFF.

Использование режима SUPER NIGHTSHOT
Режим ночной суперсъемки позволяет сделать объекты более чем в 16 раз ярче, чем в случае, если Вы будете выполнять съемку в темноте в режиме ночной съемки.

(1) Передвиньте переключатель NIGHTSHOT в положение ON в режиме CAMERA. На экране ЖКД или в видоискателе появится индикатор [50].
(2) Нажмите кнопку SUPER NIGHTSHOT. На экране ЖКД или в видоискателе начнут мигать индикаторы S[50] и "SUPER NIGHTSHOT".
Для отмены режима ночной суперсъемки нажмите кнопку SUPER NIGHTSHOT еще раз.

Использование подсветки для ночной съемки
Изображение станет ярче, если включить функцию ночной подсветки. Для включения функции ночной подсветки установите переключатель N.S.LIGHT в положение ON в установках меню (стр. 76).

Notes
- Do not use the NightShot function in bright places (ex. outdoors in the daytime). This may cause your camcorder to malfunction.
- When you keep NIGHTSHOT set to ON in normal recording, the picture may be recorded in incorrect or unnatural colours.
- If focusing is difficult with the autofocus mode when using the NightShot function, focus manually.

While using the NightShot function, you can not use the following functions:
– Exposure
– PROGRAM AE

While using the Super NightShot mode, you can not use the following functions:
– Fader
– Digital effect
– Exposure
– PROGRAM AE

Shutter speed in the Super NightShot mode
The shutter speed will be automatically changed depending on the brightness of the background. The motion of the picture will be slow.

NightShot Light
NightShot Light rays are infrared and so are invisible. The maximum shooting distance using the NightShot Light is about 3 m (10 feet).

Примечания
- Не используйте функцию ночной съемки в ярких местах (например, на улице в дневное время). Это может привести к неисправности Вашей видеокамеры.
- При удержании установки NIGHTSHOT в положении ON при нормальной записи изображение может быть записано в неправильных или неестественных цветах.
- Если фокусировка затруднена в автоматическом режиме при использовании функции ночной съемки, выполните фокусировку вручную.

При использовании функции ночной съемки Вы не можете использовать следующие функции:
– Экспозиция
– PROGRAM AE

При использовании функции ночной суперсъемки Вы не можете использовать следующие функции:
– Фейдер
– Цифровой эффект
– Экспозиция
– PROGRAM AE

Скорость затвора в режиме ночной суперсъемки
Скорость затвора будет автоматически изменяться в зависимости от яркости фона. Воспроизведение изображения будет замедленным.

Подсветка для ночной съемки
Лучи подсветки для ночной съемки являются инфракрасными и поэтому невидимыми. Максимальное расстояние для съемки при использовании подсветки для ночной съемки равно примерно 3 м.

Checking the recording – END SEARCH/EDITSEARCH/Rec Review

You can use these buttons to check the recorded picture or shoot so that the transition between the last recorded scene and the next scene you record is smooth.

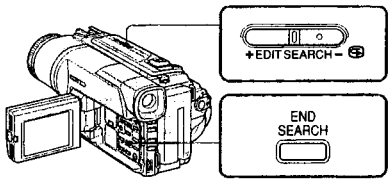

END SEARCH

You can go to the end of the recorded section after you record.

Press END SEARCH in the standby mode.
The last 5 seconds of the recorded section are played back and returns to the standby mode. You can monitor the sound from the speaker or headphones.

EDITSEARCH

You can search for the next recording start point.

Hold down the +/– (⊜) side of EDITSEARCH in the standby mode. The recorded section is played back.
+: to go forward
–: to go backward
Release EDITSEARCH to stop playback. If you press START/STOP, re-recording begins from the point you released EDITSEARCH. You cannot monitor the sound.

Проверка записи – END SEARCH/EDITSEARCH/ Просмотр записи

Вы можете использовать эти кнопки для проверки записанного изображения или съемки, так чтобы переход между последним записанным эпизодом и следующим записываемым эпизодом был плавным.

END SEARCH

Вы можете дойти до конца записанной части ленты после выполнения записи.

Нажмите кнопку END SEARCH в режиме ожидания. Будут воспроизведены последние 5 секунд, после чего видеокамера вернется в режим ожидания. Вы можете контролировать звук через динамик или головные телефоны.

EDITSEARCH

Вы можете выполнять поиск места начала следующей записи.

Держите нажатой сторону +/– (⊜) кнопки EDITSEARCH в режиме ожидания. Будет воспроизведена записанная часть.
+: для продвижения вперед
–: для продвижения назад
Отпустите кнопку EDITSEARCH для остановки воспроизведения. Если Вы нажмете кнопку START/STOP, начнется перезапись с того места, где Вы отпустили кнопку EDITSEARCH. Вы не можете контролировать звук.

Checking the recording – END SEARCH/EDITSEARCH/Rec Review

Rec Review

You can check the section which you have stopped most recently.

Press the – (⊜) side of EDITSEARCH momentarily in the standby mode.
The section you have stopped most recently will be played back for a few seconds, and then your camcorder will return to the standby mode. You can monitor the sound from the speaker or headphones.

Notes
- END SEARCH, EDITSEARCH and Rec Review work only for tapes recorded in the Digital8 system.
- If you start recording after using the end search function, occasionally, the transition between the last scene you recorded and the next scene may not be smooth.
- Once you eject the cassette after you have recorded on the tape, the end search function does not work.

When there is a blank portion between pictures on a tape
The end search function may not work.

Проверка записи – END SEARCH/EDITSEARCH/ Просмотр записи

Просмотр записи

Вы можете проверить последнюю записанную часть.

Нажмите кратковременно сторону – (⊜) кнопки EDITSEARCH в режиме ожидания. Будут воспроизведены последние несколько секунд записанной части. Вы можете контролировать звук через акустическую систему или головные телефоны.

Примечания
- Функции END SEARCH, EDITSEARCH и просмотра записи работают только для лент, записанных в цифровой системе Digital8.
- Если Вы случайно начали запись после использования функции поиска конца записи, то переход между последним записанным эпизодом и следующим записываемым эпизодом может не быть плавным.
- Если Вы вытолкните кассету после того, как будет выполнена запись на ленте, функция поиска конца записи не будет работать.

Если на ленте между изображениями имеется незаписанный участок
Функция поиска может не работать.

— Playback – Basics —

Playing back a tape

You can monitor the playback picture on the LCD screen. If you close the LCD panel, you can monitor the playback picture in the viewfinder. You can control playback using the Remote Commander supplied with your camcorder.
(1) Install the power source and insert the recorded tape.
(2) Set the POWER switch to PLAYER while pressing the small green button. The video control buttons light up.
(3) Open the LCD panel while pressing OPEN.
(4) Press ◄◄ to rewind the tape.
(5) Press ► to start playback.
(6) To adjust the volume, press either of the two buttons on VOLUME. The speaker on your camcorder is silent when the LCD panel is closed.

— Воспроизведение – Основные положения —

Воспроизведение ленты

Вы можете контролировать воспроизводимое изображение на экране ЖКД. Если Вы закроете панель ЖКД, Вы можете контролировать воспроизводимое изображение в видоискателе. Вы можете контролировать воспроизведение с помощью пульта дистанционного управления, прилагаемого к Вашей видеокамере.
(1) Установите источник питания и вставьте записанную ленту.
(2) Нажав маленькую зеленую кнопку, установите переключатель POWER в положение PLAYER. Появится индикация кнопок управления.
(3) Нажав кнопку OPEN, откройте панель ЖКД.
(4) Нажмите кнопку ◄◄ для ускоренной перемотки ленты назад.
(5) Нажмите кнопку ► для включения воспроизведения.
(6) Для регулировки громкости нажимайте одну из двух кнопок VOLUME. Если панель ЖКД на Вашей видеокамере закрыта, динамик не будет работать.

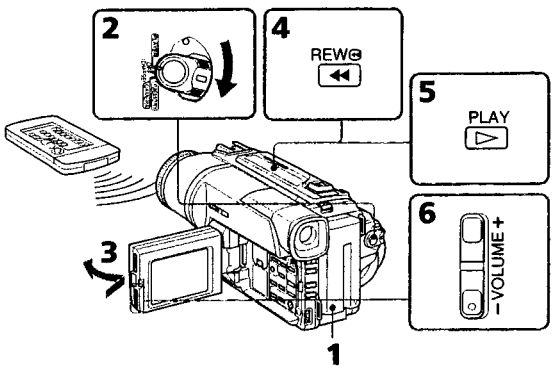

To stop playback
Press ■.

Для остановки воспроизведения
Нажмите кнопку ■.

Playing back a tape

When monitoring on the LCD screen
You can turn the LCD panel over and move it back to the camcorder body with the LCD screen facing out.

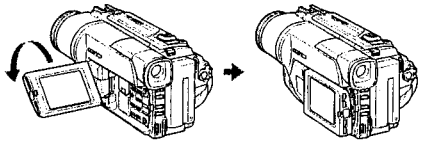

To display the screen indicators – Display function

Press DISPLAY on your camcorder or the Remote Commander supplied with your camcorder.
The indicators appear on the LCD screen. To make the indicators disappear, press DISPLAY again.

Воспроизведение ленты

Во время контроля на экране ЖКД
Вы можете повернуть панель управления и придвинуть ее обратно на место к корпусу видеокамеры, так что экран ЖКД будет обращен наружу.

Для отображения экранных индикаторов – Функция индикации

Нажмите кнопку DISPLAY на Вашей видеокамере или на пульте дистанционного управления, который прилагается к Вашей видеокамере.
На экране ЖКД появятся индикаторы. Для того, чтобы индикаторы исчезли, нажмите еще раз кнопку DISPLAY.

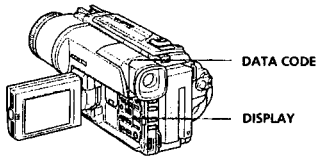

Playing back a tape

Using the data code function

Your camcorder automatically records not only images on the tape but also the recording data (date/time or various settings when recorded) **(Data code)**.

Press DATA CODE on your camcorder or the Remote Commander in the playback mode.

The display changes as follows:
date/time → various settings (SteadyShot, exposure AUTO/MANUAL, white balance, gain, shutter speed, aperture value) → no indicator

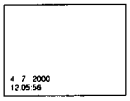

Not to display recording date
Set DATA CODE to DATE in the menu settings (p. 76).
The display changes as follows:
date/time → no indicator

Note on the data code function
The data code function works only for tapes recorded in the Digital8 system.

Recording data
Recording data is your camcorder's information when you have recorded. In the recording mode, the recording data will not be displayed.

When you use data code function, bars (-- -- ---- and --:--:--) appear if:
- A blank section of the tape is being played back.
- The tape is unreadable due to tape damage or noise.
- The tape was recorded by a camcorder without the date and time set.

Воспроизведение ленты

Использование функции кода даты

Ваша видеокамера автоматически записывает не только изображения на ленту, но также и данные записи (дату/время или разные установки при записи). **(Код даты)**.

Нажмите кнопку DATE CODE на Вашей видеокамере или пульте дистанционного управления в режиме воспроизведения.

Индикация будет изменяться следующим образом:
дата/время → разные установки (устойчивая съемка, экспозиция AUTO/MANUAL, баланс белого, усиление, скорость затвора, величина диафрагмы) → без индикации

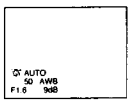

Для того, чтобы не отображались данные записи
Установите команду DATE CODE в положение DATE в установках меню (стр. 76).
Индикация будет изменяться следующим образом:
дата/время → без индикации

Примечание по функции кода данных
Функция кода данных работает только для лент, записанных в цифровой системе Digital8.

Записанные данные
Записанные данные несут информацию о записи, выполненной Вашей видеокамерой. В режиме записи данные отображаться не будут.

Если Вы используете функцию кода данных, то появятся полосы (-- -- ---- и --:--:--), если:
- Воспроизводится незаписанный участок на ленте.
- Лента является не читаемой из-за повреждения или помех.
- Запись на ленту была выполнена видеокамерой без установки даты и времени.

Playing back a tape

Various playback modes

To operate video control buttons, set the POWER switch to PLAYER.

To view a still picture (playback pause)
Press ❚❚ during playback. To resume playback, press ❚❚ or ►.

To advance the tape
Press ►► in the stop mode. To resume normal playback, press ►.

To rewind the tape
Press ◄◄ in the stop mode. To resume normal playback, press ►.

To change the playback direction
Press < on the Remote Commander during playback to reverse the playback direction. To resume normal playback, press ►.

To locate a scene monitoring the picture (picture search)
Keep pressing ◄◄ or ►► during playback. To resume normal playback, release the button.

To monitor the high-speed picture while advancing or rewinding the tape (skip scan)
Keep pressing ◄◄ while rewinding or ►► while advancing the tape. To resume rewinding or advancing, release the button.

To view the picture at slow speed (slow playback)
Press ❚► on the Remote Commander during playback. For slow playback in the reverse direction, press <, then press ❚► on the Remote Commander. To resume normal playback, press ►.

Воспроизведение ленты

Переменные режимы воспроизведения

Для выполнения управления кнопками установите переключатель POWER в положение PLAYER.

Для просмотра неподвижного изображения (пауза воспроизведения)
Нажмите во время воспроизведения кнопку ❚❚. Для возобновления обычного воспроизведения нажмите кнопку ❚❚ или кнопку ►.

Для ускоренной перемотки ленты вперед
Нажмите в режиме остановки кнопку ►►. Для возобновления обычного воспроизведения нажмите кнопку ►.

Для ускоренной перемотки ленты назад
Нажмите в режиме остановки кнопку ◄◄. Для возобновления обычного воспроизведения нажмите кнопку ►.

Для изменения направления воспроизведения
Нажмите кнопку < на пульте дистанционного управления во время воспроизведения для изменения направления воспроизведения. Для возобновления обычного воспроизведения, отпустите кнопку ►.

Для отыскания эпизода во время контроля изображения (поиск изображения)
Держите нажатой кнопку ◄◄ или ►► во время воспроизведения. Для восстановления обычного воспроизведения отпустите кнопку.

Для контроля изображения на высокой скорости во время ускоренной перемотки ленты вперед или назад (поиск методом прогона)
Держите нажатой кнопку ◄◄ во время ускоренной перемотки ленты назад или кнопку ►► во время ускоренной перемотки ленты вперед. Для возобновления обычной перемотки ленты вперед или назад отпустите кнопку.

Для просмотра воспроизведения изображения на замедленной скорости (замедленное воспроизведение)
Нажмите во время воспроизведения кнопку ❚► на пульте дистанционного управления. Для замедленного воспроизведения в обратном направлении нажмите кнопку <, а затем нажмите кнопку ❚► на пульте дистанционного управления. Для возобновления обычного воспроизведения нажмите кнопку ►.

Playing back a tape

To view the picture at double speed

Press ×2 on the Remote Commander during playback. For double speed playback in the reverse direction, press <, then press ×2 on the Remote Commander. To resume normal playback, press ►.

To view the picture frame-by-frame

Press II► on the Remote Commander in the playback pause mode. For frame-by-frame playback in the reverse direction, press ◄II. To resume normal playback, press ►.

To search the last scene recorded (END SEARCH)

Press END SEARCH in the stop mode. The last 5 seconds of the recorded section plays back and stops.

In the various playback modes
- Noise may appear when your camcorder plays back tapes recorded in the Hi8/standard 8 system.
- Sound is muted.
- The previous recording may appear as a mosaic image when playing back in the Digital8 system.

Notes on the playback pause mode
- When the playback pause mode lasts for 3 minutes, your camcorder automatically enters the stop mode. To resume playback, press ►.
- The previous recording may appear.

Slow playback for tapes recorded in the Digital8 system
The slow playback can be performed smoothly on your camcorder; however, this function does not work for an output signal from the DV OUT jack.

When you play back a tape in reverse
Horizontal noise may appear at the center or top and bottom of the screen. This is not a malfunction.

Воспроизведение ленты

Для просмотра воспроизведения изображения на удвоенной скорости

Нажмите кнопку ×2 на пульте дистанционного управления во время воспроизведения. Для воспроизведения на удвоенной скорости в обратном направлении нажмите кнопку <, а затем кнопку ×2 на пульте дистанционного управления. Для возобновления обычного воспроизведения нажмите кнопку ►.

Для покадрового просмотра воспроизведения изображения

Нажмите кнопку II► на пульте дистанционного управления в режиме паузы воспроизведения. Для покадрового воспроизведения в обратном направлении нажмите кнопку ◄II. Для возобновления обычного воспроизведения нажмите кнопку ►.

Для поиска последнего записанного эпизода (END SEARCH)

Нажмите кнопку END SEARCH в режиме остановки. Будут воспроизведены последние 5 секунд записанного участка на ленте, после чего воспроизведение остановится.

В переменных режимах воспроизведения
- При воспроизведении на видеокамере лент Hi8/8 могут появиться помехи
- Звук будет приглушен.
- При воспроизведении в цифровой системе Digital8 изображение предыдущих записей может стать мозаичным.

Если режим паузы воспроизведения продлится 3 минуты
- Ваша видеокамера автоматически войдет в режим остановки. Для возобновления воспроизведения нажмите кнопку ►.
- Может появиться предыдущая запись.

Замедленное воспроизведение для лент, записанных в цифровой системе Digital8
Замедленное воспроизведение может выполняться на Вашей видеокамере без помех; однако эта функция не работает через выходной сигнал из гнезда DV OUT.

При воспроизведении ленты в обратном направлении
На экране могут появиться горизонтальные помехи по центру или же вверху и внизу экрана. Это не является неисправностью.

Viewing the recording on TV

Connect your camcorder to your TV or VCR with the A/V connecting cable supplied with your camcorder to watch the playback picture on the TV screen. You can operate the playback control buttons in the same way as when you monitor playback pictures on the LCD screen. When monitoring the playback picture on the TV screen, we recommend that you power your camcorder from the mains using the AC power adaptor (p. 13). Refer to the operating instructions of your TV or VCR.

Open the jack cover. Connect your camcorder to the TV using the A/V connecting cable. Then, set the TV/VCR selector on the TV to VCR.

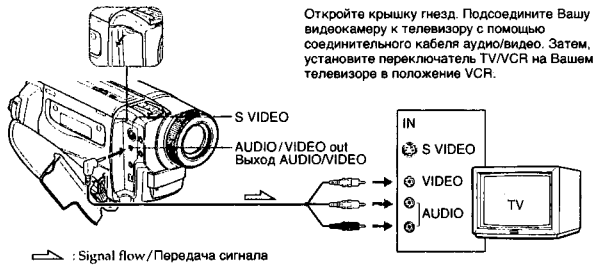

: Signal flow/Передача сигнала

If your TV is already connected to a VCR

Connect your camcorder to the LINE IN input on the VCR by using the A/V connecting cable supplied with your camcorder. Set the input selector on the VCR to LINE.

If your TV or VCR is a monaural type

Connect the yellow plug of the A/V connecting cable to the video input jack and the white or the red plug to the audio input jack on the VCR or the TV. If you connect the white plug, the sound is L (left) signal. If you connect the red plug, the sound is R (right) signal.

Просмотр записи на экране телевизора

Подсоедините Вашу видеокамеру к Вашему телевизору или KBM с помощью соединительного кабеля аудио/видео, который прилагается к Вашей видеокамере для просмотра воспроизводимого изображения на экране телевизора. Вы можете оперировать кнопками управления воспроизведением таким же способом, как при управлении воспроизводимым изображением на экране ЖКД. При управлении воспроизводимым изображением на экране телевизора рекомендуется подключить питание к Вашей видеокамере от сетевой розетки с помощью сетевого адаптера переменного тока (стр. 13). См. инструкцию по эксплуатации Вашего телевизора или KBM.

Откройте крышку гнезд. Подсоедините Вашу видеокамеру к телевизору с помощью соединительного кабеля аудио/видео. Затем, установите переключатель TV/VCR на Вашем телевизоре в положение VCR.

Если Ваш телевизор уже подсоединен к KBM

Подсоедините Вашу видеокамеру к входному гнезду LINE IN на KBM с помощью соединительного кабеля аудио/видео, который прилагается к Вашей видеокамере. Установите селектор входного сигнала на KBM в положение LINE.

Если Ваш телевизор или KBM монофонического типа

Подсоедините желтый штекер соединительного кабеля аудио/видео к входному гнезду видеосигнала и белый или красный штекер к входному гнезду аудиосигнала на KBM или телевизоре. Если Вы подсоедините белый штекер, то будет звук L (левый) канал.
Если Вы подсоедините красный штекер, то будет звук R (правый) канал.

If your TV/VCR has a 21-pin connector (EUROCONNECTOR)

Use the 21-pin adaptor supplied with your camcorder.

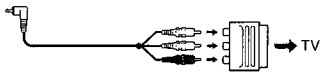

If your TV or VCR has an S video jack
Connect using an S video cable (not supplied) to obtain high-quality pictures. With this connection, you do not need to connect the yellow (video) plug of the A/V connecting cable. Connect the S video cable (not supplied) to the S video jacks on both your camcorder and the TV or the VCR.

Если в Вашем телевизоре/КВМ имеется 21-штырьковый разъем (EUROCONNECTOR)

Используйте 21-штырьковый адаптер, прилагаемый к Вашей видеокамере.

Если в Вашем телевизоре или КВМ имеется гнездо S видео
Выполните соединение с помощью кабеля S видео (не прилагается) для получения высококачественного изображения. При данном соединении Вам не нужно подсоединять желтый штекер (видео) соединительного кабеля аудио/видео. Подсоедините кабель S видео (не прилагается) к гнездам S видео на Вашей видеокамере и Вашем телевизоре или КВМ.

Using the AV cordless IR receiver

Once you connect the AV cordless IR receiver (not supplied) to your TV or VCR, you can easily view the picture on your TV. For details, refer to the operating instructions of the AV cordless IR receiver.

Использование беспроводного ИК аудиовидеоприемника

После подсоединения беспроводного ИК аудиовидеоприемника к Вашему телевизору (не прилагается) Вы можете легко наблюдать изображение на экране Вашего телевизора. Подробные сведения содержатся в инструкции по эксплуатации беспроводного ИК аудиовидеоприемника.

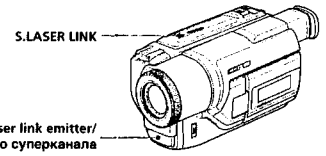

(1) After connecting your TV and AV cordless IR receiver, set the POWER switch on the AV cordless IR receiver to ON.
(2) Turn the TV on and set the TV/VCR selector on the TV to VCR.
(3) Press S.LASER LINK. The lamp of S.LASER LINK lights up.
(4) Press ► on your camcorder to start playback.
(5) Point the super laser link emitter at the AV cordless IR receiver. Adjust the position of your camcorder and the AV cordless IR receiver to obtain clear playback pictures.

(1) После подсоединения к Вашему телевизору беспроводного ИК аудиовидеоприемника установите переключатель POWER на беспроводном ИК аудиовидеоприемнике в положение ON.
(2) Включите телевизор и установите селектор TVC/VCR на телевизоре в положение VCR.
(3) Нажмите кнопку S.LASER LINK. Высветится лампочка S.LASER LINK.
(4) Нажмите кнопку ► на Вашей видеокамере для начала включения воспроизведения.
(5) Направьте излучатель лазерного суперканала на беспроводный ИК аудиоприемник. Отрегулируйте положение Вашей видеокамеры и беспроводного ИК аудиовидеоприемника для получения четкого воспроизводимого изображения.

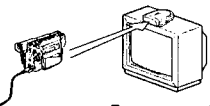

To cancel the super laser link function
Press S.LASER LINK. The lamp on the S.LASER LINK button goes out.

If you turn the power off
Super laser link function turns off automatically.
Note
When super laser link is activated (the S.LASER LINK button is lit), your camcorder consumes power. Press S.LASER LINK to turn off the super laser link function when it is not needed.

is a trademark of Sony Corporation

Для отмены функции лазерного суперканала передачи сигналов
Нажмите кнопку S.LASER LINK. Лампочка на кнопке S.LASER LINK погаснет.

Если Вы выключите питание
Лазерный суперканал передачи сигналов выключится автоматически.
Примечание
При включенном лазерном суперканале передачи сигналов (при этом высвечивается кнопка S.LASER LINK) Ваша видеокамера потребляет питание. Нажмите кнопку S.LASER LINK для выключения функции лазерного канала передачи сигналов, если она не требуется.

является фирменным знаком Sony Corporation

Recording a still image on a tape – Tape Photo recording

You can record a still image like a photograph. This mode is useful when you want to record a picture such as a photograph or when you print a picture using a video printer (not supplied).
You can record about 510 images in the SP mode and about 765 images in the LP mode on a tape which can record for 60 minutes in the SP mode. Besides the operation described here, your camcorder can record still images on the "Memory Stick"s (p. 91) (DCR-TRV320E only).
(1) In the standby mode, keep pressing PHOTO lightly until a still image appears. The CAPTURE indicator appears. Recording does not start yet.
To change the still image, release PHOTO, select a still image again, and then press and hold PHOTO lightly.
(2) Press PHOTO deeper.
The still image on the LCD screen or in the viewfinder is recorded for about seven seconds. The sound during those seven seconds is also recorded.
The still image is displayed on the LCD screen or in the viewfinder untill recording is completed.

Запись неподвижного изображения на ленту – фотосъемка на ленту

Вы можете записывать неподвижное изображение подобно фотографии. Данный режим полезен, если Вы хотите записывать изображение в виде фотоснимка или же при выполнении отпечатков с помощью видеопринтера (не прилагается).
Вы можете записать около 510 изображений в режиме SP и около 765 изображений в режиме LP ленте, которая позволяет выполнять запись в течение 60 минут в режиме SP. Кроме описанной здесь операции, Ваша видеокамера может выполнить запись неподвижных изображений на "Memory Stick" (стр. 91) (только DCR-TRV320E).
(1) В режиме ожидания держите слегка нажатой кнопку PHOTO до тех пор, пока не появится неподвижное изображение. Появится индикатор CAPTURE. Запись пока еще не началась. Для изменения неподвижного изображения отпустите кнопку PHOTO, выберите неподвижное изображение снова, а затем нажмите и держите слегка нажатой кнопку PHOTO.
(2) Нажмите кнопку PHOTO сильнее.
Неподвижное изображение в видоискателе или на экране ЖКД будет записываться около семи секунд. В течение этих семи секунд будет записываться и звук.
Неподвижное изображение будет отображаться на экране ЖКД или в видоискателе тех пор, пока запись не будет завершена.

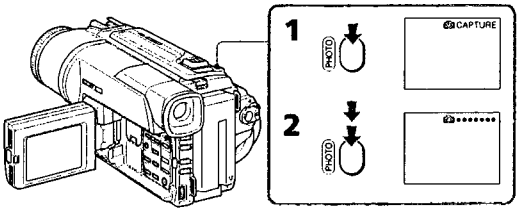

Notes
- During the tape photo recording, you cannot change the mode or setting.
- The PHOTO button does not work:
  - while the digital effect function is set or in use.
  - while the fader function is in use.
- When recording a still image, do not shake your camcorder. Mosaic-pattern noise may appear on the image.

To use the tape photo recording function using the Remote Commander
Press PHOTO in the Remote Commander. Your camcorder records an image on the LCD screen or in the viewfinder immediately.

When you use the tape photo recording function during normal CAMERA recording
You cannot check an image on the LCD screen or in the viewfinder by pressing PHOTO lightly. Press PHOTO deeper. The still image is then recorded for about seven seconds, and your camcorder returns to the standby mode. During the seven seconds to record, you cannot shoot another still image.

Примечания
- Во время фотосъемки на ленту Вы не можете изменять режим или установку.
- Кнопка PHOTO не работает:
  - если установлена или используется функция цифрового эффекта.
  - если используется функция фейдера.
- При записи неподвижного изображения не трясите Вашу видеокамеру. Иначе на изображении могут появиться помехи мозаичного типа.

Для использования функции фотосъемки на ленту с помощью пульта дистанционного управления
Нажмите кнопку PHOTO на пульте дистанционного управления. Ваша видеокамера тотчас же начнет запись изображения на экране ЖКД или в видоискателе.

При использовании функции фотосъемки на ленту во время обычной записи CAMERA
Вы не можете проверить изображение на экране ЖКД или в видоискателе, слегка нажав кнопку PHOTO. Нажмите кнопку PHOTO сильнее. Неподвижное изображение будет записываться около семи секунд, а затем видеокамера вернется в режим ожидания. В течение этих семи секунд записи Вы не можете выполнять съемку другого неподвижного изображения.

Recording a still image on a tape – Tape Photo recording

Printing the still image

You can print a still image by using the video printer (not supplied). Connect the video printer using the A/V connecting cable supplied with your camcorder.
Connect the A/V connecting cable to the AUDIO/VIDEO out jack and connect the yellow plug of the cable to the video input of the video printer. Refer to the operating instructions of the video printer as well.

Запись неподвижного изображения на ленту – фотосъемка на ленту

Печатание неподвижного изображения

Вы можете выполнить печатание неподвижного изображения с помощью видеопринтера (не прилагается). Подсоедините видеопринтер с помощью соединительного кабеля аудио/видео, который прилагается к Вашей видеокамере. Подсоедините соединительный кабель аудио/видео к выходному гнезду AUDIO/VIDEO и подсоедините желтый штекер кабеля к входному гнезду видеосигнала на видеопринтере. Воспользуйтесь также инструкцией по эксплуатации видеопринтера.

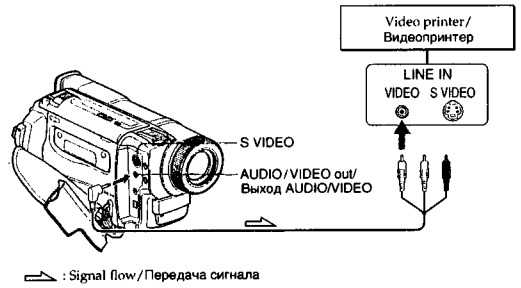

If the video printer is equipped with S video input
Use the S video connecting cable (not supplied). Connect it to the S VIDEO jack and the S video input of the video printer.

Если в видеопринтере имеется входное гнездо S видео
Используйте соединительный кабель кабель S видео (не прилагается). Подсоедините его к гнезду S VIDEO и ко входному гнезду S видео на видеопринтере.

Using the wide mode

You can record a 16:9 wide picture to watch on the 16:9 wide-screen TV (16:9WIDE).
Black bands appear on the LCD screen or in the viewfinder (DCR-TRV320E only) during recording in 16:9WIDE mode **[a]**. The picture during playing back in the viewfinder (DCR-TRV120E/TRV125E), on a normal TV **[b]** or a wide-screen TV **[c]** are compressed in the widthwise direction. If you set the screen mode of the wide-screen TV to the full mode, you can watch pictures of normal images **[d]**.

Использование широкоэкранного режима

Вы можете записывать широкоформатное изображение 16:9 для просмотра на широкоэкранном телевизоре формата 16:9 (16:9WIDE).
Во время записи в режиме 16:9WIDE на экране ЖКД или в видоискателе (только DCR-TRV320E) появятся черные полосы **[a]**. Изображение во время воспроизведения в видоискателе (DCR-TRV120E/TRV125E) на обычном телевизоре **[b]** или на широкоэкранном телевизоре **[c]** будет сжато по ширине. Если Вы установите режим экрана широкоэкранного телевизора в полноэкранный режим, Вы можете наблюдать обычные изображения без искажений **[d]**.

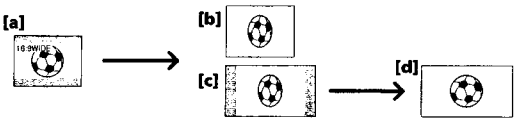

In the standby mode, set 16:9WIDE to ON in the menu settings (p. 76).

В режиме ожидания установите команду 16:9WIDE в положение ON в установках меню (стр. 76).

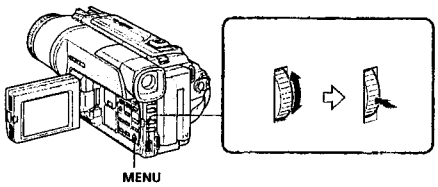

To cancel the wide mode
Set 16:9WIDE to OFF in the menu settings.

In the wide mode, you cannot select the following functions:
– Old movie
– Bounce

During recording
You cannot select or cancel the wide mode. When you cancel the wide mode, set your camcorder to the standby mode and then set 16:9WIDE to OFF in the menu setting.

Для отмены широкоэкранного режима
Установите команду 16:9WIDE в положение OFF в установках меню.

В широкоэкранном режиме не можете выбирать следующие функции:
– Старинное кино
– Перескакивания

Во время записи
Вы не можете выбрать или отменить широкоэкранный режим. Если Вы отмените широкоэкранный режим, установите Вашу видеокамеру в режим ожидания, а затем установите команду 16:9 WIDE в положение OFF в установках меню.

Using the fader function

You can fade the picture in or out to give your recording a professional appearance.

Использование функции фейдера

Вы можете выполнять плавное введение и выведение изображения, чтобы придать Вашей съемке профессиональный вид.

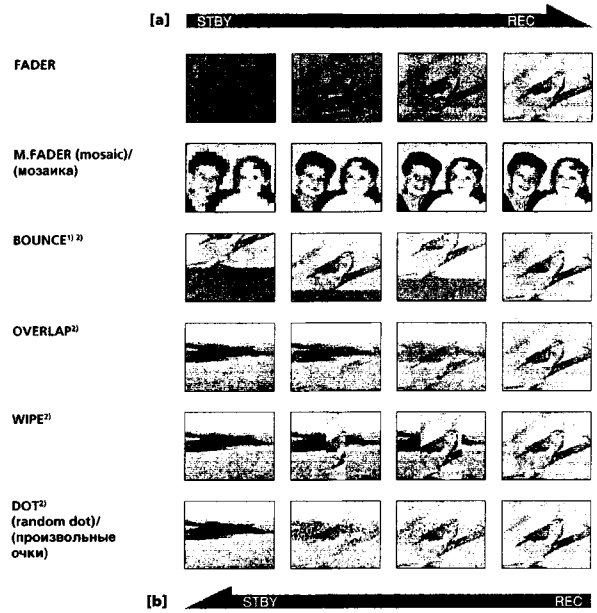

MONOTONE
When fading in, the picture gradually changes from black-and-white to colour.
When fading out the picture gradually changes from colour to black-and-white.

1) You can use this function only when D ZOOM is set to OFF in the menu settings.

2) Fade in only

MONOTONE
При введении изображение будет постепенно изменяться от черно-белого до цветного.
При выведении изображение будет постепенно изменяться от цветного до черно-белого.

1) Вы можете использовать эту функцию только если команда D ZOOM установлена в положение OFF в установках меню.

2) Только введение изображения

Using the fader function

(1) When fading in [a]
In the standby mode, press FADER until the desired fader indicator flashes.
When fading out [b]
In the recording mode, press FADER until the desired fader indicator flashes.
The indicator changes as follows:
FADER → M.FADER → BOUNCE → MONOTONE → OVERLAP → WIPE → DOT
The last selected fader mode is indicated first of all.
(2) Press START/STOP. The fader indicator stops flashing.
After the fade in/out is carried out, your camcorder automatically returns to the normal mode.

Использование функции фейдера

(1) При введении изображения [a]
В режиме ожидания, нажимайте кнопку FADER до тех пор, пока не начнет мигать нужный индикатор фейдера.
При выведении изображения [b]
В режиме записи, нажимайте кнопку FADER до тех пор, пока не начнет мигать нужный индикатор фейдера.
Индикатор будет изменяться следующим образом:
FADER → M.FADER → BOUNCE → MONOTONE → OVERLAP → WIPE → DOT
Последний из выбранных режимов фейдера отображается первым.
(2) Нажмите кнопку START/STOP. Индикатор фейдера перестанет мигать.
После того, как выполнено введение/выведение изображения, ваша видеокамера автоматически вернется в обычный режим.

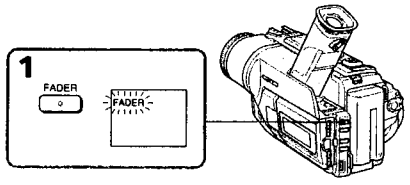

To cancel the fader function
Before pressing START/STOP, press FADER until the indicator disappears.

Для отмены функции фейдера
Перед тем, как нажать кнопку START/STOP, нажимайте кнопку FADER до тех пор, пока не исчезнет индикатор.

Using the Fader function

Notes

- The overlap, wipe and dot functions work only for tapes recorded in the Digital8 (8) system.
- You cannot use the following functions while using the fader function. Also, you cannot use the fader function while using the following functions:
  - Digital effect
  - Low lux mode of PROGRAM AE (Overlap, wipe or dot function only)
  - Super NightShot
  - Tape photo recording

Before operating the overlap, wipe or dot function

Your camcorder stores the image on the tape. As the image is being stored, the indicator flashes quickly, and the image you are shooting disappears from the LCD or viewfinder screen. Depending on the tape condition, the image may not be recorded clearly.

While using the bounce function, you cannot use the following functions:

- Focus
- Zoom
- Picture effect

Note on the bounce function

The BOUNCE indicator does not appear in the following mode or functions:

- D ZOOM is activated in the menu settings
- 16:9 WIDE
- Picture effect
- PROGRAM AE

Использование функции фейдера

Примечание

- Функция наложения изображения работает только лент, записанных в цифровой системе Digital8 (8).
- Вы не можете использовать следующие функции во время использования функции фейдера. Также, Вы не можете использовать функцию фейдера во время использования следующих функций:
  - Цифровой эффект
  - Режим низкой освещенности PROGRAM AE (только функция наложения, вытеснения шторкой или точечного изображения)
  - Ночная суперсъемка
  - Фотосъемка ра ленту

Перед тем, как включить функцию наложения, вытеснения шторкой или точечного изображения

Ваша видеокамера хранит изображение на ленте. Во время сохранения изображения индикатор мигает быстро, а изображение, которое Вы снимаете, исчезнет с экрана ЖКД или экрана видоискателя. В зависимости от состояния ленты, изображение может быть записано нечетко.

Во время использования функции перескакивания Вы не можете использовать следующие функции:

- Фокусировка
- Трансфокация
- Эффект изображения

Примечание по функции перескакивания

Индикатор BOUNCE не появляется в следующих режимах или при использовании следующих функций:

- Команда D ZOOM приведена в действие в установках меню
- 16:19WIDE
- Эффект изображения
- PROGRAM AE

Using special effects – Picture effect

You can digitally process images to obtain special effects like those in films or on the TV.

NEG. ART [a] : The colour and brightness of the image is reversed.
SEPIA : The image is sepia.
B&W : The image is monochrome (black-and-white).
SOLARIZE [b] : The light intensity is clearer, and the image looks like an illustration.
SLIM [c] : The image expands vertically.
STRETCH [d] : The image expands horizontally.
PASTEL [e] : The contrast of the image is emphasized, and the image looks like an animated cartoon.
MOSAIC [f] : The image is mosaic.

специальных эффектов – Эффект изображения

Вы можете выполнять обработку изображения цифровым методом для получения специальных эффектов, как в кинофильмах или на экранах телевизоров.

NEG. ART [a] : Цвет и яркость изображения будут негативными.
SEPIA : Изображение будет в цвете сепии.
B&W : Изображение будет монохроматическим (черно-белым).
SOLARIZE [b] : Яркость света будет усиленной, а изображение будет выглядеть как иллюстрация.
SLIM [c] : Изображение растянется по вертикали.
STRETCH [d] : Изображение растянется по горизонтали.
PASTEL [e] : Подчеркивается контрастность изображения, которому придается мультипликационный вид.
MOSAIC [f] : Изображение будет мозаическим.

[a] [b] [c] [d] [e] [f]

Using special effects – Picture effect

(1) Press PICTURE EFFECT in CAMERA mode. The picture effect indicator appears.
(2) Turn the SEL/PUSH EXEC dial to select the desired picture effect mode.
The indicator changes as follows:
NEG.ART ↔ SEPIA ↔ B&W ↔ SOLARIZE ↔ SLIM ↔ STRETCH ↔ PASTEL ↔ MOSAIC

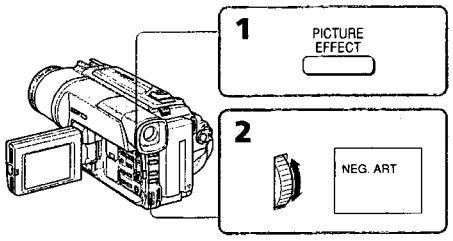

To turn the picture effect function off

Press PICTURE EFFECT.

While using the picture effect function

You cannot select OLD MOVIE with DIGITAL EFFECT.

When you turn the power off

The picture effect will be automatically canceled.

Использование специальных эффектов – Эффект изображения

(1) Нажмите кнопку PICTURE EFFECT в режиме CAMERA.
Появится индикатор эффекта изображения.
(2) Поверните диск SEL/PUSH EXEC для выбора режима нужного эффекта изображения.
Индикатор будет изменяться следующим образом:
NEG.ART ↔ SEPIA ↔ B&W ↔ SOLARIZE ↔ SLIM ↔ STRETCH ↔ PASTEL ↔ MOSAIC

Для выключения функции эффекта изображения

Нажмите кнопку PICTURE EFFECT.

При использовании функции эффекта изображения

Вы не можете выбрать режим OLD MOVIE кино с помощью функции DIGITAL EFFECT.

Если Вы выключите питание

Ваша видеокамера автоматически вернется в обычный режим.

Using special effects – Digital effect

You can add special effects to recorded images using the various digital functions. The sound is recorded normally.

STILL
You can record a still image so that it is superimposed on a moving image.

FLASH (FLASH MOTION)
You can record still images successively at constant intervals.

LUMI. (LUMINANCEKEY)
You can swap a brighter area in a still image with a moving image.

TRAIL
You can record the image so that an incidental image like a trail is left.

SLOW SHTR (SLOW SHUTTER)
You can slow down the shutter speed. The slow shutter mode is good for recording dark images more brightly. However, the picture may be less clear.

OLD MOVIE
You can add an old movie type atmosphere to images. Your camcorder automatically sets the wide mode to ON, image effect to SEPIA, and the appropriate shutter speed.

Использование специальных эффектов – Цифровой эффект

Вы можете добавлять специальные эффекты к записываемому изображению с помощью разных цифровых функций. Записываемый звук будет обычным.

STILL
Вы можете записывать неподвижное изображение, которое можно налагать на подвижное изображение.

FLASH (FLASH MOTION)
Вы можете записывать неподвижные изображения в последовательности через определенные интервалы.

LUMI. (LUMINANCEKEY)
Вы можете изменять яркие места на неподвижном изображении на подвижные изображения.

TRAIL
Вы можете записывать изображение с эффектом запаздывания.

SLOW SHTR (SLOW SHUTTER)
Вы можете замедлить скорость затвора. Режим медленного затвора является подходящим для записи темных изображений в более ярком свете. Однако, изображение может получиться менее четким.

OLD MOVIE
Вы можете привносить атмосферу старинного кино в изображения. Ваша видеокамера будет автоматически устанавливать широкоэкранный режим в положение ON, эффект изображения в положение SEPIA, и выставлять соответствующую скорость затвора.

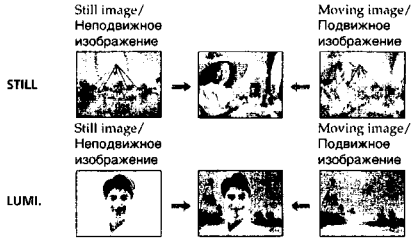

Using special effects – Digital effect

(1) While your camcorder is in CAMERA mode, press DIGITAL EFFECT. The digital effect indicator appears.
(2) Turn the SEL/PUSH EXEC dial to select the desired digital effect mode.
The indicator changes as follows:
STILL ⟷ FLASH ⟷ LUMI. ⟷ TRAIL ⟷ SLOW SHTR ⟷ OLD MOVIE
(3) Press the SEL/PUSH EXEC dial. The indicator lights up and the bars appear. In the STILL and LUMI. modes, the still image is stored in memory.
(4) Turn the SEL/PUSH EXEC dial to adjust the effect as follows:

STILL – The rate of the still image you want to superimpose on the moving picture
FLASH – The interval of flash motion
LUMI. – The colour scheme of the area in the still image which is to be swapped with a moving picture
TRAIL – The vanishing time of the incidental image
SLOW SHTR – Shutter speed. The larger the shutter speed number, the slower the shutter speed.
OLD MOVIE – No adjustment necessary

The more bars there are on screen, the stronger the digital effect. The bars appear in the following modes: STILL, FLASH, LUMI. and TRAIL.

Использование специальных эффектов – Цифровой эффект

(1) В то время, когда Ваша видеокамера находится в режиме CAMERA, нажмите кнопку DIGITAL EFFECT. Появится индикатор цифрового эффекта.
(2) Поверните диск SEL/PUSH EXEC для выбора режима нужного цифрового эффекта.
Индикатор будет изменяться следующим образом:
STILL ⟷ FLASH ⟷ LUMI. ⟷ TRAIL ⟷ SLOW SHTR ⟷ OLD MOVIE
(3) Нажмите диск SEL/PUSH EXEC. Высветится индикатор и появятся полосы. В режимах STILL и LUMI. неподвижное изображение будет сохранено в памяти.
(4) Поверните диск SEL/PUSH EXEC для регулировки эффекта:

STILL – Интенсивность неподвижного изображения, которое Вы хотите наложить на подвижное изображение
FLASH – Интервал прерывистого движения
LUMI. – Цветовая гамма участка на неподвижном изображении, который будет заменен на подвижное изображение
TRAIL – Время исчезания побочного изображения
SLOW SHTR – Скорость затвора. Чем больше величина скорости затвора, тем медленнее скорость затвора
OLD MOVIE – Не требуется никаких регулировок

Чем больше полос на экране, тем сильнее цифровой эффект. Полосы появляются в следующих режимах: STILL, FLASH, LUMI. и TRAIL.

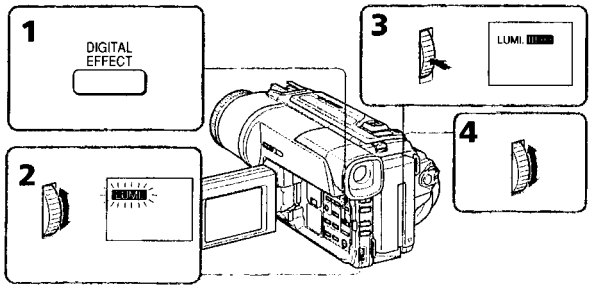

Using special effects – Digital effect

To cancel the digital effect
Press DIGITAL EFFECT.

Notes
- The following functions do not work during digital effect:
  - Fader
  - Low lux mode of PROGRAM AE
  - Tape photo recording
  - Super NightShot
- The following functions do not work in the slow shutter mode:
  - Exposure
  - PROGRAM AE
- The following functions do not work in the old movie mode:
  - Exposure
  - 16:9 WIDE
  - Picture effect
  - PROGRAM AE

When you turn the power off
The digital effect will be automatically canceled.

When recording in the slow shutter mode
Auto focus may not be effective. Focus manually using a tripod.

Shutter speed

Shutter speed number	Shutter speed
SLOW SHTR 1	1/25
SLOW SHTR 2	1/12
SLOW SHTR 3	1/6
SLOW SHTR 4	1/3

Использование специальных эффектов – Цифровой эффект

Для отмены цифрового эффекта
Нажмите кнопку DIGITAL EFFECT.

Примечания
- Следующие функции не работают при использовании цифрового эффекта:
  - Фейдер
  - Режим низкой освещенности PROGRAM AE
  - Фотосъемка на ленту
  - Ночная суперсъемка
- Следующие функции не работают в режиме медленного затвора:
  - Экспозиция
  - PROGRAM AE
- Следующие функции не работают в режиме старинного кино:
  - Экспозиция
  - 16:9WIDE
  - Эффект изображения
  - PROGRAM AE

При выключении питания
Цифровой эффект будет автоматически отменен.

При записи в режиме медленного затвора
Автоматическая фокусировка может быть не эффективной. Выполните фокусировку вручную, используя треногу.

Скорость затвора

Величина скорости затвора	Скорость затвора
SLOW SHTR1	1/25
SLOW SHTR2	1/12
SLOW SHTR3	1/6
SLOW SHTR4	1/3

Using the PROGRAM AE function

You can select PROGRAM AE (Auto Exposure) mode to suit your specific shooting requirements.

Spotlight mode
This mode prevents people's faces, for example, from appearing excessively white when shooting subjects lit by strong light in the theatre.

Soft portrait mode
This mode brings out the subject while creating a soft background for subjects such as people or flowers.

Sports lesson mode
This mode minimizes shake on fast-moving subjects such as in tennis or golf.

Beach & ski mode
This mode prevents people's faces from appearing dark in strong light or reflected light, such as at a beach in midsummer or on a ski slope.

Sunset & moon mode
This mode allows you to maintain atmosphere when you are recording sunsets, general night views, fireworks displays and neon signs.

Landscape mode
This mode is for when you are recording distant subjects such as mountains and prevents your camcorder from focusing on glass or metal mesh in windows when you are recording a subject behind glass or a screen.

Low lux mode
This mode makes subjects brighter in insufficient light.

Использование функции PROGRAM AE

Вы можете выбрать режим PROGRAM AE (автоматическая съемка) в соответствии со специфическими требованиями к съемке.

Режим прожекторного освещения
Данный режим предотвращает, к примеру, лица людей от появления в чрезмерно белом свете при выполнении съемки людей, освещенных сильным светом на свадебных церемониях или в театре.

Мягкий портретный режим
Этот режим позволяет выделить объект на фоне мягкого фона, и подходит для съемки, например, людей или цветов.

Режим спортивных состязаний
Этот режим позволяет минимизировать дрожание при съемке быстро движущихся предметов, например, при игре в теннис или гольф.

Пляжный и лыжный режим
Этот режим предотвращает появление темных лиц людей в зоне сильного света или отраженного света, например, на пляже в разгар лета или на снежном склоне.

Режим захода солнца и луны
Этот режим позволяет в точности отражать обстановку при съемке заходов солнца, общих ночных видов, фейерверков и неоновых реклам.

Ландшафтный режим
Этот режим позволяет выполнять съемку отдаленных объектов, таких как горы, например, и предотвращает фокусировку видеокамеры на стекло или металлическую решетку на окнах, когда Вы выполняете запись объектов позади стекла или решетки.

Режим низкой освещенности
Этот режим делает объекты ярче при недостаточном освещении.

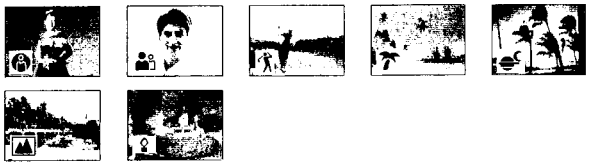

Using the PROGRAM AE function

(1) Press PROGRAM AE in CAMERA or MEMORY (DCR-TRV320E only) mode. The indicator appears.
(2) Turn the SEL/PUSH EXEC dial to select the desired mode.
The indicator changes as follows:

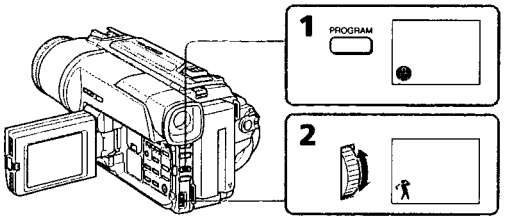

To turn the PROGRAM AE function off
Press PROGRAM AE.

Notes
- In the spotlight, sports lesson and beach & ski modes, you cannot take close-ups. This is because your camcorder is set to focus only on subjects in the middle to far distance.
- In the sunset & moon and landscape modes, your camcorder is set to focus only on distant subjects.
- The following functions do not work in the PROGRAM AE mode:
  - Slow shutter
  - Old movie
  - Bounce
- The following functions do not work in the low lux mode:
  - Digital effect
  - Overlap
  - Wipe
  - Dot
  - Exposure
- While setting the NIGHTSHOT to ON, the PROGRAM AE function does not work. (The indicator flashes.)
- While shooting in MEMORY (DCR-TRV320E only) mode, the low lux mode does not work. (The indicator flashes).

If you are recording under a discharge tube such as a fluorescent lamp, sodium lamp or mercury lamp
Flickering or changes in colour may occur in the following modes. If this happens, turn the PROGRAM AE function off.
- Soft portrait mode
- Sports lesson mode

Использование функции PROGRAM AE

(1) Нажмите кнопку PROGRAM AE в режиме CAMERA или MEMORY (Только DCR-TRV320E). Появится индикатор.
(2) Поверните диск SEL/PUSH EXEC для выбора нужного режима.
Индикатор будет изменяться следующим образом:

Для выключения функции PROGRAM AE
Нажмите кнопку PROGRAM AE.

Примечания
- В режимах прожекторного освещения, спортивных состязаний, а также в пляжном и лыжном режиме Вы можете выполнять съемку крупным планом. Это объясняется тем, что Ваша видеокамера настроена для фокусировки только на объекты, находящиеся на среднем и дальнем расстояниях.
- В режиме захода солнца и луны, а также в ландшафтном режиме Ваша видеокамера настроена на фокусировку только на дальние объекты.
- Следующие функции не работают в режиме PROGRAM AE:
  - Медленный затвор
  - Старинное кино
  - Пересканирование
- Следующие функции не работают в режиме низкой освещенности:
  - Цифровой эффект
  - Наложение изображения
  - Ночная съемка
  - Точечное изображение
  - Экспозиция
- Во время установки команды NIGHTSHOT в положение ON, функция PROGRAM AE не работает. (Индикатор будет мигать).
- Во время съемки в режиме MEMORY (Только DCR-TRV320E), режим низкой освещенности не работает. (Индикатор будет мигать).

Если Вы выполняете запись при использовании газоразрядной лампы, натриевой лампы или ртутной лампы
В следующих режимах может возникнуть мерцание или неустойчивые процессы. Если это произойдет, выключите функцию PROGRAM AE.
- Мягкий портретный режим
- Режим спортивных состязаний

Adjusting the exposure manually

You can manually adjust and set the exposure. Adjust the exposure manually in the following cases:
- The subject is backlit
- Bright subject and dark background
- To record dark pictures (e.g. night scenes) faithfully

(1) In CAMERA or MEMORY (DCR-TRV320E only) mode, press EXPOSURE.
The exposure indicator appears on the LCD screen or in the viewfinder.
(2) Turn the SEL/PUSH EXEC dial to adjust the brightness.

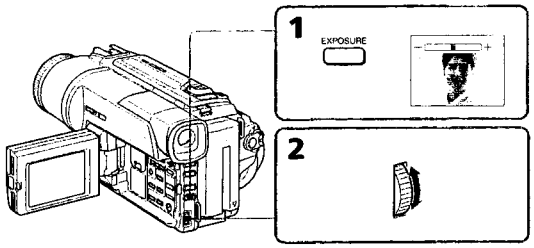

To return to the automatic exposure mode
Press EXPOSURE.

Notes
- When you adjust the exposure manually, the following function and modes do not work in CAMERA or MEMORY (DCR-TRV320E only) mode:
  - Backlight
  - Old movie
  - Slow shutter
- When you adjust the exposure manually, the backlight function does not work in MEMORY (DCR-TRV320E only) mode.

Your camcorder automatically returns to the automatic mode:
- if you change the PROGRAM AE mode
- if you slide NIGHTSHOT to ON

Регулировка экспозиции вручную

Вы можете отрегулировать и установить экспозицию вручную.
Отрегулируйте экспозицию вручную в следующих случаях:
- Объект на фоне задней подсветки
- Яркий объект на темном фоне
- Для записи темных изображений (например, ночных сцен) с большой достоверностью

(1) В режиме CAMERA или MEMORY (Только DCR-TRV320E), нажмите кнопку EXPOSURE.
На экране ЖКД или в видоискателе появится индикатор экспозиции.
(2) Поверните диск SEL/PUSH EXEC для регулировки яркости.

Для возврата в режим автоматической экспозиции
Нажмите кнопку EXPOSURE.

Примечания
- При выполнении регулировки экспозиции вручную, следующие функции и режимы не работают в режиме CAMERA или MEMORY (Только DCR-TRV320E).
  - Задняя подсветка
  - Старинное кино
  - Медленный затвор
- При выполнении регулировки экспозиции вручную, функция задней подсветки не работает в режиме MEMORY (Только DCR-TRV320E).

Ваша видеокамера автоматически вернется в режим автоматической экспозиции:
- если Вы измените режим PROGRAM AE
- если Вы передвинете переключатель NIGHTSHOT в положение ON

Focusing manually

You can gain better results by manually adjusting the focus in the following cases:
- The autofocus mode is not effective when shooting
  - subjects through glass coated with water droplets
  - horizontal stripes
  - subjects with little contrast with backgrounds such as walls and sky
- When you want to change the focus from a subject in the foreground to a subject in the background
- Shooting a stationary subject when using a tripod

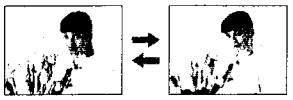

(1) Set FOCUS to MANUAL in CAMERA or MEMORY (DCR-TRV320E only) mode. The ☞ indicator appears on the LCD screen or in the viewfinder.
(2) Turn the focus ring to sharpen focus.

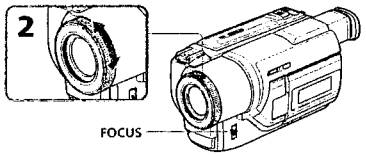

To return to the autofocus mode
Set FOCUS to AUTO.

To record distant subjects
When you press FOCUS down to INFINITY. The lens focuses on infinity and ▲ indicator appears. When you release FOCUS, your camcorder returns to the manual focus mode. Use this mode when your camcorder focuses on near objects even though you are trying to shoot a distant object.

Фокусировка вручную

Вы можете получить лучшие результаты путем регулировки вручную в следующих случаях:
- Режим автоматической фокусировки является неэффективным при выполнении съемки
  - объектов через покрытое каплями стекло
  - горизонтальных полос
  - объектов с малой контрастностью на таком фоне, как стена или небо
- Если Вы хотите выполнить изменение фокусировки с объекта на переднем плане на объект на заднем плане
- При выполнении съемки стационарных объектов с использованием треноги

(1) Установите переключатель FOCUS в положение MANUAL в режиме CAMERA или MEMORY (Только DCR-TRV320E). На экране ЖКД или в видоискателе появится индикатор ☞.
(2) Поверните кольцо фокусировки для получения четкой фокусировки.

Для возвращения в режим фокусировки
Установите переключатель FOCUS в положение AUTO.

Для съемки удаленных объектов
Если Вы нажмете вниз кнопку FOCUS в положение INFINITY. Объектив выполнит фокусировку на бесконечность, и появится индикатор ▲. Если Вы отпустите кнопку FOCUS, Ваша видеокамера вернется в режим ручной фокусировки. Используйте этот режим, если Ваша видеокамера выполняет фокусировку на ближние объекты, даже если Вы пытаетесь выполнить съемку отдаленного объекта.

Focusing manually

To focus precisely
Adjust the zoom by first focusing at the "T" (telephoto) position and then shooting at the "W" (wide-angle) position. This makes focusing easier.

When you shoot close to the subject
Focus at the end of the "W" (wide-angle) position.

☞ changes to the following indicators:
▲ when recording a distant subject.
▲ when the subject is too close to focus on.

Фокусировка вручную

Для точной фокусировки
Отрегулируйте объектив, сначала выполнив фокусировку в положении "T" (телефото), а затем выполнив съемку в положении "W" (широкого угла охвата). Это упростит фокусировку.

При выполнении съемки вблизи объекта
Выполните фокусировку в конце положения "W" (широкого угла охвата).

Индикация ☞ изменится на следующие индикаторы:
▲ при записи удаленного объекта.
▲ если объект находится слишком близко, чтобы выполнить фокусировку на него.

Superimposing a title

You can select one of eight preset titles and two custom titles (p. 61). You can also select the language, colour, size and position of titles.

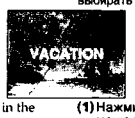

(1) Press TITLE to display the title menu in the standby mode.
(2) Turn the SEL/PUSH EXEC dial to select 🗀, then press the dial.
(3) Turn the SEL/PUSH EXEC dial to select the desired title, then press the dial. The titles are displayed in the language you selected.
(4) Change the colour, size, or position, if necessary.
  ① Turn the SEL/PUSH EXEC dial to select the colour, size, or position, then press the dial. The item appears.
  ② Turn the SEL/PUSH EXEC dial to select the desired item, then press the dial.
  ③ Repeat steps ① and ② until the title is laid out as desired.
(5) Press the SEL/PUSH EXEC dial again to complete the setting.
(6) Press START/STOP to start recording.
(7) When you want to stop recording the title, press TITLE.

Наложение титра

Вы можете выбрать один из восьми предварительно установленных титров и двух собственных титров (стр. 61). Вы можете также выбирать язык, цвет, размер и положение титров.

(1) Нажмите кнопку TITLE для отображения меню титров в режиме ожидания.
(2) Поверните диск SEL/PUSH EXEC для выбора установки 🗀, а затем нажмите диск.
(3) Поверните диск SEL/PUSH EXEC для выбора нужного титра, а затем нажмите диск. Титры будут отображаться на выбранном Вами языке.
(4) Измените цвет, размер или положение титра, если нужно.
  ① Поверните диск SEL/PUSH EXEC для выбора цвета, размера или положения титра, а затем нажмите диск.
  ② Поверните диск SEL/PUSH EXEC для выбора нужного пункта, а затем нажмите диск.
  ③ Повторяйте пункты ① и ② до тех пор, пока титр не будет расположен так, как нужно.
(5) Нажмите диск SEL/PUSH EXEC для завершения установки.
(6) Нажмите кнопку START/STOP для начала записи.
(7) Если Вы захотите остановить запись титра, нажмите кнопку TITLE.

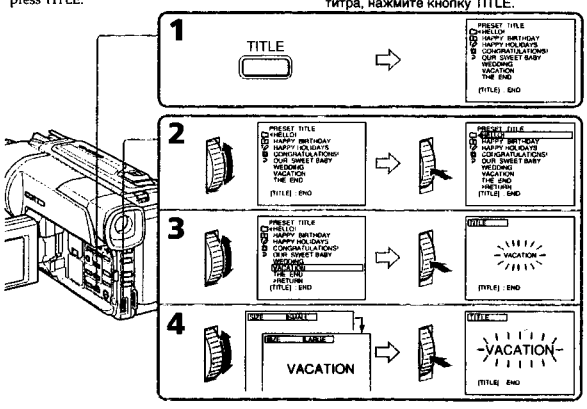

Superimposing a title

To superimpose the title while you are recording

Press TITLE while you are recording, and carry out steps 2 to 5. When you press the SEL/PUSH EXEC dial at step 5, the title is recorded.

To select the language of a preset title

If you want to change the language, select before step 2. Then select the desired language and return to step 2.

If you display the menu or title menu while superimposing a title

The title is not recorded while the menu or title menu is displayed.

To use the custom title

If you want to use the custom title, select in step 2.
If you have not made any custom title, "– – – – ..." appears on the display.

Title setting

- The title colour changes as follows :
  WHITE ⟷ YELLOW ⟷ VIOLET ⟷ RED ⟷ CYAN ⟷ GREEN ⟷ BLUE
- The title size changes as follows :
  SMALL ⟷ LARGE
  You cannot input more than 12 characters in LARGE size.
- The title position changes as follows :
  1⟷ 2⟷ 3⟷ 4⟷ 5⟷ 6⟷ 7⟷ 8⟷ 9
  The larger the position number, the lower the title is positioned.
  When you select the title size "LARGE", you cannot choose position 9.

When you are selecting and setting the title

You cannot record the title displayed on the screen.

When you superimpose a title while you are recording

The beep does not sound.

While you are playing back

You can superimpose a title. However, the title is not recorded on tape.
You can record a title when you dub the tape connecting your camcorder to the VCR with the A/V connecting cable. If you use the i.LINK cable instead of the A/V connecting cable, you cannot record the title.

Наложение титра

Для наложения титра во время записи

Нажмите кнопку TITLE во время записи и выполните действия пунктов 2-5. Если Вы нажмете диск SEL/PUSH EXEC в пункте 5, титр будет записан.

Для выбора языка предварительно установленного титра

Если Вы хотите изменить язык, выберите индикацию перед пунктом 2. Затем выберите нужный язык и вернитесь к пункту 2.

В случае отображения меню или меню титров во время наложения титра

Титр не будет записываться во время отображения меню или меню титров

Для использования собственного титра

Если Вы хотите использовать собственный титр, выберите установку в пункте 2. Если Вы не сделали никакого собственного титра, на дисплее появится индикация "– – – – ...".

Установка титра

- Цвет титра изменяется следующим образом:
  WHITE (белый) ⟷ YELLOW (желтый) ⟷ VIOLET (фиолетовый) ⟷ RED (красный) ⟷ CYAN (голубой) ⟷ GREEN (зеленый) ⟷ BLUE (синий)
- Размер титра изменяется следующим образом:
  SMALL (маленький) ⟷ LARGE (большой)
  Вы не можете ввести более 12 символов для размера титра LARGE.
- Позиция титра изменяется следующим образом:
  1⟷ 2⟷ 3⟷ 4⟷ 5⟷ 6⟷ 7⟷ 8⟷ 9
  Чем выше номер позиции титра, тем ниже расположен титр.
  Если Вы выберите размер титра "LARGE", Вы не сможете выбрать положение 9.

При выборе и установке титра

Вы не можете записать титр, отображаемый на экране.

При наложении титра во время записи

Зуммерный сигнал не будет звучать.

Во время воспроизведения

Вы можете наложить титр. Однако титр не будет записан на ленту.
Вы можете записать титр при перезаписи ленты, подсоединив Вашу видеокамеру к КВМ с помощью соединительного аудио-/видеошнура. Если Вы используете шнур i.LINK вместо соединительного аудио-/видеошнура, Вы не сможете записать титр.

Making your own titles

You can make up to two titles and store them in your camcorder. Each title can have up to 20 characters.

(1) Press TITLE in the standby or PLAYER mode.
(2) Turn the SEL/PUSH EXEC dial to select , then press the dial.
(3) Turn the SEL/PUSH EXEC dial to select the first line (CUSTOM1) or second line (CUSTOM2), then press the dial.
(4) Turn the SEL/PUSH EXEC dial to select the column of the desired character, then press the dial.
(5) Turn the SEL/PUSH EXEC dial to select the desired character, then press the dial.
(6) Repeat steps 4 and 5 until you have selected all characters and completed the title.
(7) To finish making your own titles, turn the SEL/PUSH EXEC dial to select [SET], then press the dial. The title is stored in memory.
(8) Press TITLE to make the title menu disappear.

Создание Ваших собственных титров

Вы можете составить до двух титров и сохранить их в памяти Вашей видеокамеры. Каждый титр может содержать до 20 символов.

(1) Нажмите кнопку TITLE в режиме ожидания или режиме PLAYER.
(2) Поверните диск SEL/PUSH EXEC для выбора установки , а затем нажмите диск.
(3) Поверните диск SEL/PUSH EXEC для выбора первой строки (CUSTOM1) или второй строки (CUSTOM2), а затем нажмите диск.
(4) Поверните диск SEL/PUSH EXEC для выбора колонки с нужным символом, а затем нажмите диск.
(5) Поверните диск SEL/PUSH EXEC для выбора нужного символа, а затем нажмите диск.
(6) Повторяйте пункты 4 и 5 до тех пор, пока Вы не выберите все символы и полностью не составите титр.
(7) Для завершения составления своих собственных титров поверните диск SEL/PUSH EXEC для выбора клманды [SET], а затем нажмите диск. Титр будет сохранен в памяти.
(8) Нажмите кнопку TITLE, чтобы исчезло меню титров.

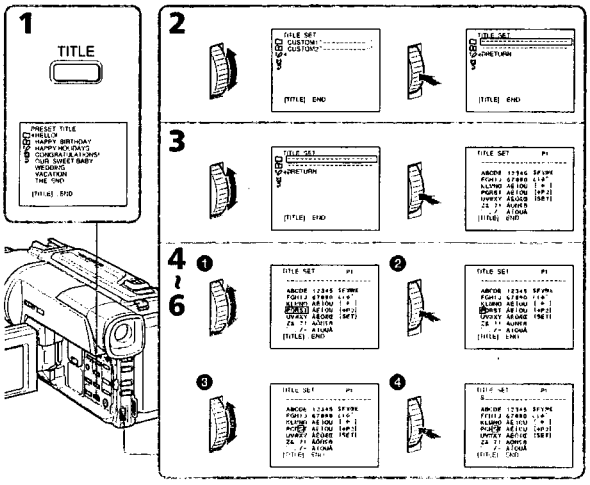

Making your own titles

To change a title you have stored

In step 3, select CUSTOM1 or CUSTOM2, depending on which title you want to change, then press the SEL/PUSH EXEC dial. Turn the SEL/PUSH EXEC dial to select [←], then press the dial to delete the title. The last character is erased. Enter the new title as desired.

If you take 3 minutes or longer to enter characters in the standby mode while a cassette is in your camcorder

The power automatically goes off. The characters you have entered remain stored in memory. Set the POWER to OFF (CHARGE) once, and turn it to CAMERA again, then proceed from step 1. We recommend setting the POWER switch to PLAYER or removing the cassette so that your camcorder does not automatically turn off while you are entering title characters.

If you select [→P2]

The menu for selecting alphabet and Russian characters appear. Select [→P1] to return to the previous screen.

To erase a character

Select [←]. The last character is erased.

To enter a space

Select [Z& ?!], then select the blank part.

Создание Ваших собственных титров

Для изменения сохраненного в памяти титра

В пункте 3 выберите установку CUSTOM1 или CUSTOM2, в зависимости от титра, который Вы хотите изменить, а затем нажмите диск SEL/PUSH EXEC. Поверните диск SEL/PUSH EXEC для выбора установки [←], а затем нажмите диск для удаления титра. Последний символ будет стерт. Введите новый нужный титр.

Если при вводе символов пройдет 3 минут или более в режиме ожидания при вставленной кассете в Вашу видеокамеру

Питание выключится автоматически. Символы, которые Вы ввели, сохранятся в памяти видеокамеры. Установите сначала переключатель POWER в положение OFF (CHARGE), а затем снова в положение CAMERA, а затем начните с пункта 1. Рекомендуется установить переключатель POWER в положение PLAYER или вынуть кассету, чтобы Ваша видеокамера автоматически не выключалась во время ввода символов титра.

Если Вы выбрали установку [→P2]

Появится меню для выбора алфавита и русских символов. Для возврата к прежнему экрану выберите установку [→P1].

Для удаления символа

Выберите установку [←]. Последний символ будет стерт.

Для ввода интервала

Выберите знак [Z& ?!], а затем выберите пустую ячейку.

Inserting a scene

You can insert a scene in the middle of a recorded tape by setting the start and end points. The previously recorded frames between these start and end points will be erased. Use the Remote Commander for this operation.

(1) While your camcorder is in the standby mode, keep pressing EDITSEARCH, and release the button at the insert end point [b].
(2) Press ZERO SET MEMORY. The ZERO SET MEMORY indicator flashes and the counter resets to zero.
(3) Keep pressing the – side of EDITSEARCH and release the button at the insert start point [a].
(4) Press START/STOP to start recording. The scene is inserted. Recording stops automatically near the counter zero point. Your camcorder returns to the standby mode.

Вставка эпизода

Вы можете вставить эпизод в середине записанной ленты путем установки точек начала и окончания. Предыдущие записанные кадры между этими точками начала и окончания будут стерты. Вы можете выполнить это, используя пульт дистанционного управления.

(1) В режиме ожидания видеокамеры, держите нажатой кнопку EDITSEARH и отпустите кнопку в точке окончания эпизода [b].
(2) Нажмите кнопку ZERO SET MEMORY. Начнет мигать индикатор ZERO SET MEMORY, а счетчик ленты будет установлен в нулевое положение.
(3) Держите нажатой сторону – кнопки EDITSEARH и отпустите кнопку в точке начала эпизода [a].
(4) Нажмите кнопку START/STOP для начала записи. Эпизод вставлен. Запись остановится автоматически в нулевой точке счетчика. Ваша видеокамера вернется в режим ожидания.

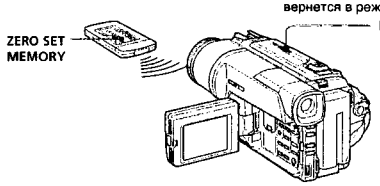

Notes

- The zero set memory function works only for tapes recorded in the Digital8 system.
- The picture and the sound may be distorted at the end of the inserted section when it is played back.

If a tape has a blank portion in the recorded portions

The zero set memory function may not work correctly.

Примечания

- Функция памяти нуля не работает для лент, записанных в цифровой системе Digital8.
- Изображение и звук могут быть искажены в конце вставленного эпизода при воспроизведении.

Если на ленте имеется незаписанный участок

Функция памяти нуля может не работать надлежащим образом.

Playing back a tape with picture effects

During playback, you can process a scene using the picture effect functions: NEG.ART, SEPIA, B&W and SOLARIZE.

During playback, press PICTURE EFFECT and turn the SEL/PUSH EXEC dial until the desired picture effect indicator (NEG.ART, SEPIA, B&W or SOLARIZE) appears.
For details of each picture effect function, see page 48.

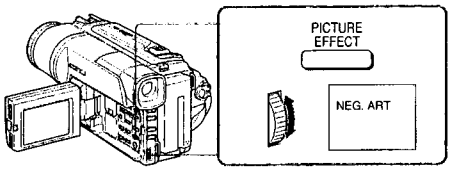

To cancel the picture effect function
Press PICTURE EFFECT.

Notes
- The picture effect function works only for tapes recorded in the Digital8 system.
- You cannot process externally input scenes using the picture effect function.
- You cannot record pictures that you have processed using the picture effect function with this camcorder. To record pictures that you have processed using the picture effect function, record the pictures on the VCR using your camcorder as a player.

Pictures processed by the picture effect function
Pictures processed by the picture effect function are not output through the DV OUT jack.

When you set the POWER switch to OFF (CHARGE) or stop playing back
The picture effect function is automatically canceled.

Воспроизведение ленты с эффектами изображения

Во время воспроизведения, Вы можете видоизменять изображение с помощью функций: NEG.ART, SEPIA, B&W и SOLARIZE.

Во время воспроизведения, нажмите кнопку PICTURE EFFECT и поворачивайте диск SEL/PUSH EXEC до тех пор, пока не начнет мигать индикатор нужного цифрового (NEG.ART, SEPIA, B&W и SOLARIZE).
Подробные сведения по каждой функции цифровых эффектов приведены на стр. 48.

Для отмены функции цифровых эффектов
Нажмите кнопку PICTURE EFFECT.

Примечания
- Функция эффектов изображения работает только для лент, записанных в цифровой системе Digital8.
- Вы не можете видоизменять изображения от КВМ или телевизора с помощью функции эффектов изображения.
- Вы не можете записывать обработанные изображения с помощью функции эффектов изображения на данной видеокамере. Для записи изображения с использованием эффектов изображения, запишите изображения на КВМ, используя Вашу видеокамеру в качестве плейера.

Изображение с эффектами изображения
Сигнал изображения с эффектами изображения не передается через выходное гнездо DV OUT.

Если Вы установили переключатель POWER в положение OFF (CHARGE) или остановили воспроизведение
Функция эффектов изображения будет автоматически отменена.

Playing back a tape with digital effects

During playback, you can process a scene using the digital effect functions: STILL, FLASH, LUMI. and TRAIL.
(1) During playback, press DIGITAL EFFECT and turn the SEL/PUSH EXEC dial until the desired digital effect indicator (STILL, FLASH, LUMI. or TRAIL) flashes.
(2) Press the SEL/PUSH EXEC dial.
The digital effect indicator lights up and the bars appear. In the STILL or LUMI. mode, the picture where you press the SEL/PUSH EXEC dial is stored in memory as a still picture.
(3) Turn the SEL/PUSH EXEC dial to adjust the effect.
For details of each digital effect function, see page 50.

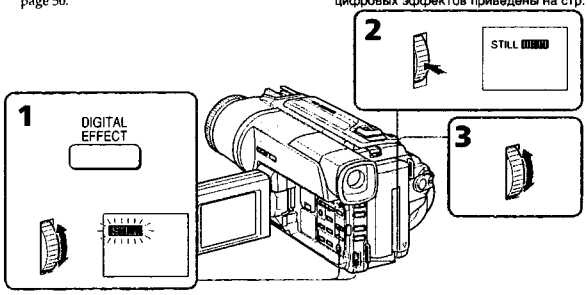

To cancel the digital effect function
Press DIGITAL EFFECT.

Notes
- The digital effect function works only for tapes recorded in the Digital8 system.
- You cannot process externally input scenes using the digital effect function.
- You cannot record pictures that you have processed using the digital effect function with this camcorder. To record pictures that you have processed using the digital effect function, record the pictures on the VCR using your camcorder as a player.

Pictures processed by the digital effect function
Pictures processed by the digital effect function are not output through the DV OUT jack.

When you set the POWER switch to OFF (CHARGE) or stop playing back
The digital effect function is automatically canceled.

Воспроизведение ленты с цифровыми эффектами

Во время воспроизведения, Вы можете видоизменять изображение с помощью функций: STILL, FLASH, LUMI. и TRAIL.
(1) Во время воспроизведения, нажмите кнопку DIGITAL EFFECT и поворачивайте диск SEL/PUSH EXEC до тех пор, пока не начнет мигать индикатор нужного цифрового эффекта (STILL, FLASH, LUMI. или TRAIL).
(2) Нажмите диск SEL/PUSH EXEC.
Высветится индикатор цифрового эффекта и появятся полосы. В режиме STILL или LUMI. Изображение, на котором Вы нажмете кнопку диск SEL/PUSH EXEC, будет занесено в память как неподвижное изображение.
(3) Поверните диск SEL/PUSH EXEC для регулировки эффекта изображения.
Подробные сведения по каждой функции цифровых эффектов приведены на стр. 50.

Для отмены функции цифровых эффектов
Нажмите кнопку DIGITAL EFFECT.

Примечания
- Функция цифровых эффектов работает только для лент, записанных в цифровой системе Digital8.
- Вы не можете видоизменять изображения от КВМ или телевизора с помощью функции цифровых эффектов.
- Вы не можете записывать обработанные изображения с помощью функции цифровых эффектов на данной видеокамере. Для записи изображения с цифровыми эффектами, запишите изображения на КВМ, используя Вашу видеокамеру в качестве плейера.

Изображение с цифровыми эффектами
Сигнал изображения с цифровыми эффектами не передается через выходное гнездо DV OUT.

Если Вы установили переключатель POWER в положение OFF (CHARGE) или остановили воспроизведение
Функция цифровых эффектов будет автоматически отменена.

Enlarging recorded images – PB ZOOM

You can enlarge moving and still images recorded on tapes.
Besides the operation described here, your camcorder can enlarge still images recorded on "Memory Stick"s (DCR-TRV320E only).
(1) Press PB ZOOM on your camcorder while you are playing back. The image is enlarged, and ↑↓ appears on the LCD screen or in the viewfinder.
(2) Turn SEL/PUSH EXEC dial to move the enlarged image, then press the dial.
↑ : The image moves downwards
↓ : The image moves upwards
← → becomes available.
(3) Turn SEL/PUSH EXEC dial to move the enlarged image, then press the dial.
← : The image moves rightward (Turn the dial downwards.)
→ : The image moves leftward (Turn the dial upwards.)

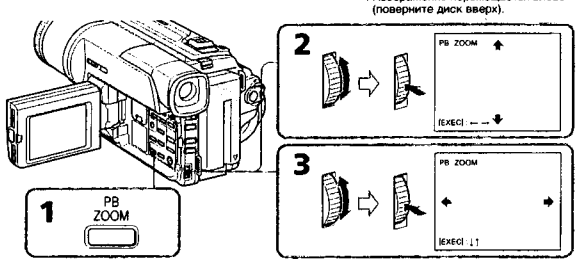

To cancel PB ZOOM function
Press PB ZOOM.

Note
- PB ZOOM works only for tapes recorded in the Digital 8 system.
- You cannot process externally input scenes using PB ZOOM function.
- You cannot record pictures that you have processed using PB ZOOM function with this camcorder. To record pictures that you have processed using PB ZOOM function, record the pictures on the VCR using your camcorder as a player.

Pictures processed by PB ZOOM function
Pictures processed by PB ZOOM function are not output through the DV OUT jack.

When you set POWER switch to OFF (CHARGE) or stop playing back
PB ZOOM function is automatically canceled.

Увеличение записанных изображений – PB ZOOM

Вы можете увеличивать движущиеся и неподвижные изображения, записанные на ленты.
Помимо операций, описанных в данном руководстве, Ваша видеокамера позволяет увеличивать неподвижные изображения, записанные на "Memory Stick" (Только DCR-TRV320E).
(1) Нажмите кнопку PB ZOOM на Вашей видеокамере во время воспроизведения. Изображение увеличится, а на экране ЖКД или в видоискателе появится индикация ↑↓.
(2) Поверните диск SEL/PUSH EXEC для перемещения увеличенного изображения, а затем нажмите диск.
↑ : Изображения перемещается вниз
↓ : Изображение перемещается вверх
← → появится на дисплее.
(3) Поверните диск SEL/PUSH EXEC для перемещения увеличенного изображения, а затем нажмите диск.
← : Изображение перемещается вправо (поверните диск вниз).
→ : Изображение перемещается влево (поверните диск вверх).

Для отмены функции PB ZOOM
Нажмите кнопку PB ZOOM.

Примечание
- Функция PB ZOOM работает только для лент, записанных в системе Digital 8.
- Вы не можете обрабатывать введенные с внешней аппаратуры изображения с помощью функции PB ZOOM.
- Вы не можете записывать изображения, обработанные с помощью функции PB ZOOM, на данной видеокамере. Для записи изображений, обработанных с помощью функции PB ZOOM, запишите изображения на КВМ с помощью видеокамеры, используя ее в качестве плейера.

Изображения, обработанные с помощью функции PB ZOOM
Изображения, обработанные с помощью функции PB ZOOM, не передаются через гнездо DV OUT.

Если Вы установите переключатель POWER в положение OFF (CHARGE) или остановите воспроизведение
Функция PB ZOOM будет автоматически отмемена.

Quickly locating a scene using the zero set memory function

Your camcorder goes forward or backward to automatically stop at a desired scene having a counter value of "0:00:00".
Use the Remote Commander for this operation. Use this function, for example, to view a desired scene later on during playback.
(1) In the playback mode, press DISPLAY.
(2) Press ZERO SET MEMORY at the point you want to locate later. The counter shows "0:00:00" and the ZERO SET MEMORY indicator flashes.
(3) Press ■ when you want to stop playback.
(4) Press ◄◄ to rewind the tape to the counter's zero point. The tape stops automatically when the counter reaches approximately zero. The ZERO SET MEMORY indicator disappears and the time code appears.
(5) Press ►. Playback starts from the counter's zero point.

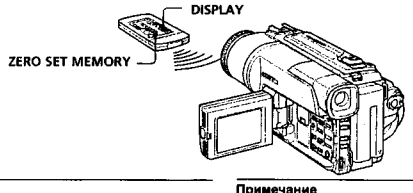

Notes
- The zero set memory function works only for tapes recorded in the Digital8 system.
- When you press ZERO SET MEMORY before rewinding the tape, the zero set memory function will be canceled.
- There may be a discrepancy of several seconds from the time code.
- The zero set memory function may not work when there is a blank portion between pictures on a tape.

ZERO SET MEMORY functions also in the standby mode
When you insert a scene in the middle of a recorded tape, press ZERO SET MEMORY at the point you want to end the insertion. Rewind the tape to the insert start point, and start recording. Recording stops automatically at the tape counter zero point. Your camcorder returns to the standby mode.

Быстрое отыскание эпизода с помощью функции памяти нулевой отметки

Ваша видеокамера выполняет продвижение вперед или назад с автоматической остановкой в нужном эпизоде, где показание счетчика равно "0:00:00".
Вы можете выполнять это с помощью пульта дистанционного управления.
Используйте эту функцию, например, для просмотра нужного эпизода позже во время воспроизведения.
(1) В режиме воспроизведения нажмите кнопку DISPLAY.
(2) Нажмите кнопку ZERO SET MEMORY в месте, которое Вы захотите найти позже. Показание счетчика станет равным "0:00:00", и начнет мигать индикатор ZERO SET MEMORY.
(3) Нажмите кнопку ■, если Вы захотите нажать остановить воспроизведение.
(4) Нажмите кнопку ◄◄ для ускоренной перемотки ленты назад к нулевой точке счетчика. Лента остановится автоматически, если счетчик достигнет нулевой отметки. Индикатор ZERO SET MEMORY исчезнет, и появится код времени.
(5) Нажмите кнопку ►. Воспроизведение начнется с нулевой отметки счетчика.

Примечание
- Функция памяти нулевой отметки работает только для лент, записанных в цифровой системе Digital8.
- Если Вы нажмете кнопку ZERO SET MEMORY до начала обратной перемотки ленты, то функция памяти нулевой отметки будет отменена.
- Может быть расхождение в несколько секунд между кодом времени и действительным временем.
- Функция памяти нулевой отметки может не работать в случае, если имеется незаписанный участок между изображениями на ленте.

Функция ZERO SET MEMORY также работает в режиме ожидания
Если Вы хотите вставить эпизод в середине записанной ленты, нажмите кнопку ZERO SET MEMORY в том месте, где вы хотите закончить вставку. Перемотайте ленту к месту начала вставки и начните запись. Запись автоматически остановится в месте нулевой отметки счетчика ленты. Ваша видеокамера вернется в режим ожидания.

Searching a recording by date – Date search

You can automatically search for the point where the recording date changes and start playback from that point **(Date search)**. Use the Remote Commander for this operation.
Use this function to check where recording dates change or to edit the tape at each recording date.

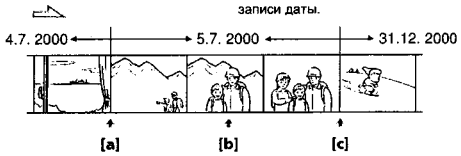

(1) Set the POWER switch to PLAYER.
(2) Press SEARCH MODE on the Remote Commander repeatedly, until the date search indicator appears.
The indicator changes as follows:
DATE SEARCH → PHOTO SEARCH → PHOTO SCAN
(3) When the current position is **[b]**, press ⏮ to search towards **[a]** or press ⏭ to search towards **[c]**. Your camcorder automatically starts playback at the point where the date changes.
Each time you press ⏮ or ⏭, the camcorder searches for the previous or next date.

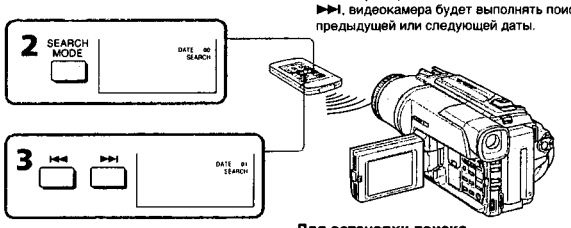

To stop searching
Press ■.

Поиск записи по дате – Поиск даты

Вы можете выполнять автоматически поиск места, где изменяется дата записи и начинать воспроизведение с этого места **(поиск даты)**. Используйте пульт дистанционного управления для таких операций.
Используйте эту функцию для проверки, где изменяются даты записи, или же для выполнения монтажа ленты в каждом месте записи даты.

(1) Установите переключатель POWER в положение PLAYER.
(2) Нажимайте повторно кнопку SEARCH MODE на пульте дистанционного управления до тех пор, пока не появится индикатор поиска даты.
Индикатор будет изменяться следующим образом: DATE SEARCH → PHOTO SEARCH → PHOTO SCAN
(3) Если текущее положение соответствует варианту **[b]**, нажмите кнопку ⏮ для выполнения поиска в направлении **[a]** или нажмите кнопку ⏭ для выполнения поиска в направлении **[c]**. Ваша видеокамера автоматически начнет воспроизведение в месте, где изменяется дата.
Всякий раз при нажатии кнопки ⏮ или ⏭, видеокамера будет выполнять поиск предыдущей или следующей даты.

Для остановки поиска
Нажмите кнопку ■.

Searching a recording by date – Date search

Notes
- The date search works only for tapes recorded in the Digital8 system.
- If one day's recording is less than two minutes, your camcorder may not accurately find the point where the recording date changes.

If a tape has a blank portion in the recorded portions
The date search function may not work correctly.

Поиск записи по дате – Поиск даты

Примечания
- Режим поиска даты функционирует только для лент, записанных в цифровой системе Digital8.
- Если в какой-либо из дней Ваша запись продолжалась менее двух минут, Ваша видеокамера может точно не найти место, где изменяется дата записи.

Если на записанной ленте имеются незаписанные участки
Функция поиска даты будет работать неправильно.

Searching for a photo – Photo search/Photo scan

You can search for the still image recorded on tape **(photo search)**.
You can also search for still images one after another and display each picture for five seconds automatically **(photo scan)**. Use the Remote Commander for these operations.

Searching for a photo

(1) Set the POWER switch to PLAYER.
(2) Press SEARCH MODE on the Remote Commander repeatedly, until the photo search indicator appears.
The indicator changes as follows:
DATE SEARCH → PHOTO SEARCH → PHOTO SCAN
(3) Press ⏮ or ⏭ to select the photo for playback. Each time you press ⏮ or ⏭, the camcorder searches for the previous or next photo. Your camcorder automatically starts playback from the photo.

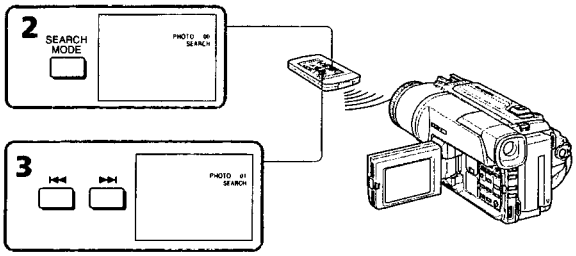

To stop searching
Press ■.

Поиск фото – Фотопоиск/ Фотосканирование

Вы можете выполнять поиск неподвижного изображения, записанного на ленту **(фотопоиск)**.
Вы также можете выполнять поиск неподвижных изображений одно за другим и отображать каждое изображение пять секнд автоматически **(фотосканирование)**.
Используйте пульт дистанционного управления для этих операций.

Поиск фото

(1) Установите переключатель POWER в положение PLAYER.
(2) Нажимайте повторно на пульте дистанционного управления кнопку SEARCH MODE до тех пор, пока не появится индикатор фотопоиска.
Индикатор будет изменяться следующим образом: DATE SEARCH → PHOTO SEARCH → PHOTO SCAN
(3) Нажмите кнопку ⏮ или ⏭, чтобы выбрать фото для воспроизведения.
Всякий раз при нажатии ⏮ или ⏭ видеокамера начинает поиск предыдущего или следующего эпизода.
Ваша видеокамера автоматически начнет воспроизведение с этого фото.

Для остановки поиска
Нажмите кнопку ■.

Searching for a photo – Photo search/Photo scan

Scanning photo

(1) Set the POWER switch to PLAYER.
(2) Press SEARCH MODE on the Remote Commander repeatedly, until the photo scan indicator appears.
The indicator changes as follows:
DATE SEARCH → PHOTO SEARCH → PHOTO SCAN
(3) Press ⏮ or ⏭.
Each photo is played back for about 5 seconds automatically.

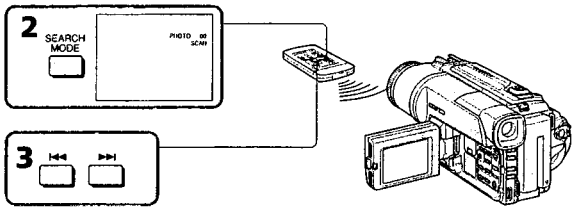

To stop scanning
Press ■.

Note
The photo search and photo scan work only for tapes recorded in the Digital8 system.

If a tape has a blank portion in the recorded portions
The photo search and photo scan functions may not work correctly.

Поиск фото – Фотопоиск/ Фотосканирование

Сканирование фото

(1) Установите переключатель POWER в положение PLAYER.
(2) Нажимайте повторно на пульте дистанционного управления кнопку SEARCH MODE до тех пор, пока не появится индикатор фотосканирования.
Индикатор будет изменяться следующим образом: DATE SEARCH → PHOTO SEARCH → PHOTO SCAN
(3) Нажмите кнопку ⏮ или ⏭.
Каждое фото будет автоматически отображаться примерно 5 секунд.

Для остановки сканирования
Нажмите кнопку ■.

Примечание
Фотопоиск и фотосканирование функционируют только для лент, записанных в цифровой системе Digital8.

Если на записанной ленте имеются незаписанные участки
Функция фотопоиска и фотосканирования может работать неправильно.

Dubbing a tape

Using the A/V connecting cable

Connect your camcorder to the VCR using the A/V connecting cable supplied with your camcorder.

(1) Insert a blank tape (or a tape you want to record over) into the VCR, and insert the recorded tape into your camcorder.
(2) Set the input selector on the VCR to LINE. Refer to the operating instructions of your VCR for more information.
(3) Set the POWER switch to PLAYER.
(4) Play back the recorded tape on your camcorder.
(5) Start recording on the VCR. Refer to the operating instructions of your VCR for more information.

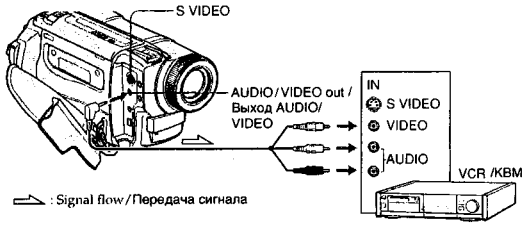

When you have finished dubbing a tape

Press ■ on both your camcorder and the VCR.

Перезапись ленты

Использование соединительного кабеля аудио/видео

Подсоедините Вашу видеокамеру к КВМ с помощью соединительного кабеля аудио/видео, который прилагается к Вашей видеокамере.

(1) Вставьте незаписанную ленту (или ленту, на которую Вы хотите выполнить запись) в КВМ и вставьте записанную ленту в Вашу видеокамеру.
(2) Установите селектор входного на КВМ в положение LINE. Более подробные сведения Вы сможете найти в инструкции по эксплуатации Вашего КВМ.
(3) Установите переключатель POWER в положение PLAYER.
(4) Начните воспроизведение записанной ленты на Вашей видеокамере.
(5) Начните запись на Вашем КВМ. Более подробные сведения Вы сможете найти в инструкции по эксплуатации Вашего КВМ.

Если Вы закончили перезапись ленты

Нажмите кнопку ■ как на видеокамере, так и на КВМ.

Dubbing a tape

If you have displayed the screen indicators on the TV

Make the indicators disappear by pressing SEARCH MODE on the Remote Commander, DISPLAY or DATA CODE so that they will not be superimposed on the edited tape.

You can edit on VCRs that support the following systems:

8 mm, Hi8, Hi8, VHS, VHS, S-VHS, S-VHS, VHSC, S-VHSC, Betamax, mini DV, DV or Digital8

If your VCR is a monaural type

Connect the yellow plug of the A/V connecting cable to the video input jack and the white or the red plug to the audio input jack on the VCR or the TV. When the white plug is connected, the left channel audio is output, and the red plug is connected, the right channel audio is output.

Connect using an S video cable (not supplied) to obtain high-quality pictures

With this connection, you do not need to connect the yellow (video) plug of the A/V connecting cable.
Connect an S video cable (not supplied) to the S video jacks of both your camcorder and the VCR.

Перезапись ленты

При отображении экранных индикаторов на экране телевизора

Добейтесь того, чтобы индикаторы исчезли, нажимая кнопку SEARCH MODE на пульте дистанционного управления, кнопку DISPLAY или DATA CODE, так чтобы они не были наложены на монтажную ленту.

Вы можете выполнять монтаж на КВМ, которые поддерживают следующие системы:

8 мм, Hi8, Hi8, VHS, VHS, S-VHS, S-VHS, VHSC, S-VHSC, Betamax, mini DV, DV или Digital8

Если Ваш КВМ монофонического типа

Подсоедините желтый штекер соединительно кабеля аудио/видео к входному видеогнезду, а белый или красный штекер к входному аудиогнезду на КВМ или телевизоре. Если подсоединен белый штекер, то выходным сигналом будет звук левого канала, а если подсоединен красный штекер, то выходным сигналом будет звук правого канала.

Выполните подсоединение с помощью кабеля S видео (не прилагается) для получения высококачественных изображений

При таком подсоединении Вам не нужно подсоединять желтый (видео) штекер соединительного кабеля аудио/видео. Подсоедините кабель S видео (не прилагается) к гнездам S видео на Вашей видеокамере и КВМ.

Dubbing a tape

Using the i.LINK cable

Simply connect the i.LINK cable (DV connecting cable) (not supplied) to i DV OUT and to DV IN/OUT of the DV products. With digital-to-digital connection, video and audio signals are transmitted in digital form for high-quality editing. You cannot dub the screen indicators.

(1) Insert a blank tape (or a tape you want to record over) into the VCR, and insert the recorded tape into your camcorder.
(2) Set the input selector on the VCR to DV IN if it is available. Refer to the operating instructions of your VCR for more infomation.
(3) Set the POWER switch to PLAYER.
(4) Play back the recorded tape on your camcorder.
(5) Start recording on the VCR. Refer to the operating instructions of your VCR for more infomation.

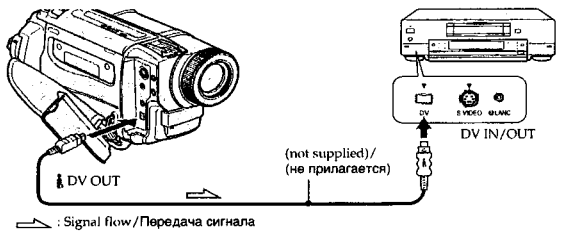

When you have finished dubbing a tape

Press ■ on both your camcorder and the VCR.

Перезапись ленты

Использование кабеля i.LINK

Просто подсоедините кабель i.LINK (соединительный кабель цифрового видеосигнала DV) (не прилагается) к гнезду i DV OUT и гнезду DV IN/OUT цифровых видеоизделий. При цифро-цифровом соединении видео- и аудиосигналы передаются в цифровой форме для последующего высококачественного монтажа. Вы не можете выполнить перезапись экранных индикаторов.

(1) Вставьте незаписанную ленту (или ленту, на которую хотите выполнить запись) в КВМ и вставьте записанную ленту в Вашу видеокамеру.
(2) Смотрите инструкцию по эсплуатации Вашего КВМ для получения дальнейшей информации.
(3) Установите переключатель POWER в положение PLAYER.
(4) Начните воспроизведение записанной ленты на Вашей видеокамере.
(5) Начните запись на КВМ. Смотрите инструкцию по эсплуатации Вашего КВМ для получения дальнейшей информации.

Если Вы закончили перезапись ленты

Нажмите кнопку ■ как на Вашей видеокамере, так и на КВМ.

Dubbing a tape

Note on tapes that are not recorded in the Digital8 system

The picture may fluctuate. This is not a malfunction.

During playback of tapes recorded in the Hi8/standard 8 system

Digital signals are output as the image signals from the i DV OUT jack.

You can connect one VCR only using the i.LINK cable (DV connecting cable).

During digital editing

You cannot use PICTURE EFFECT or DIGITAL EFFECT button functions.

If you record playback pause picture via the i DV OUT jack

The recorded picture becomes rough. Also, when you play back the recorded pictures on other video equipment, the picture may jitter.

i.LINK and i are trademarks.

This "i.LINK" mark indicates that this product is in agreement with IEEE 1394-1995 specifications and their revisions.

Перезапись ленты

Примечание относительно лент, которые были записаны не в цифровой системе Digital8

Возможно подрагивание изображения. Это не является неисправностью.

Во время воспроизведения ленты, записанной в системе Hi8/стандартной системе 8

Цифровые сигналы выводятся в качестве сигналов изображения через выходное гнездо i DV OUT.

Вы можете подсоединить один только КВМ с помощью кабеля i.LINK (соединительного кабеля DV)

Во время цифрового монтажа

Вы не можете использовать функции кнопок PICTURE EFFECT или DIGITAL EFFECT.

При записи на паузе воспроизводимого изображения через гнездо i DV OUT

Записанное изображение будет искаженным. Также, при воспроизведении записанных изображений на другой аппаратуре, изображение может подрагивать.

i.LINK и i являются фирменными знаками

Знак "i.LINK" указывает на то, что данное изделие соответствует техническим условиям IEEE 1394-1995 и их дополнениям.

Changing the menu settings

To change the mode settings in the menu settings, select the menu items with the SEL/PUSH EXEC dial. The default settings can be partially changed. First, select the icon, then the menu item and then the mode.

(1) In CAMERA, PLAYER or MEMORY (DCR-TRV320E only) mode, press MENU.
(2) Turn the SEL/PUSH EXEC dial to select the desired icon, then press the dial to set.
(3) Turn the SEL/PUSH EXEC dial to select the desired item, then press the dial to set.
(4) Turn the SEL/PUSH EXEC dial to select the desired mode, and press the dial to set.
(5) If you want to change other items, select ↩ RETURN and press the dial, then repeat steps from 2 to 4.

For details, see "Selecting the mode setting of each item" (p. 77).

Изменение установок меню

Для изменения установок режима в установках меню выберите пункты меню с помощью диска SEL/PUSH EXEC. Установки по умолчанию можно частично изменить. Сначала выберите пиктограмму, затем пункт меню, а затем режим.

(1) В режиме CAMERA, PLAYER или MEMORY (только DCR-TRV320E) нажмите кнопку MENU.
(2) Поверните диск SEL/PUSH EXEC для выбора нужной пиктограммы, а затем нажмите диск для выполнения установки.
(3) Поверните диск SEL/PUSH EXEC для выбора нужной пиктограммы, а затем нажмите диск для выполнения установки.
(4) Поверните диск SEL/PUSH EXEC для выбора нужной пиктограммы, а затем нажмите диск для выполнения установки.
(5) Если Вы хотите изменить другие пункты, выберите команду ↩ RETURN, а затем нажмите диск, после чего повторите действия пунктов 2–4.

Подробные сведения приведены в разделе "Выбор установок режима по каждому пункту" (стр. 83).

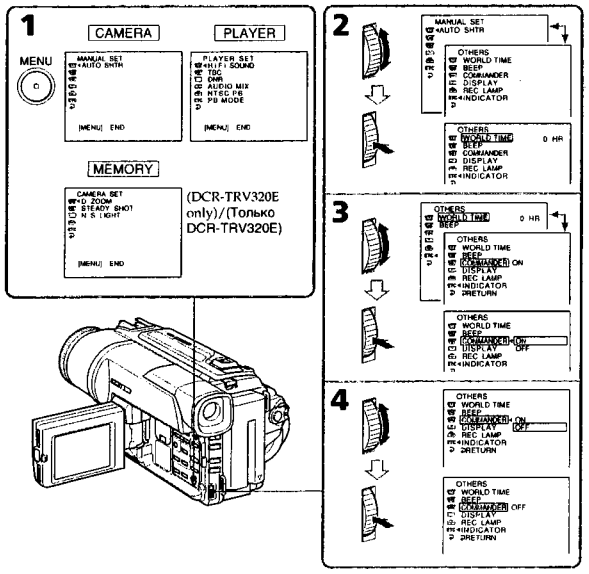

Changing the menu settings

To make the menu display disappear
Press MENU.

Menu items are displayed as the following icons:

- MANUAL SET
- CAMERA SET
- PLAYER SET
- LCD/VF SET (DCR-TRV320E only)/ LCD SET (DCR-TRV120E/TRV125E)
- MEMORY SET (DCR-TRV320E only)
- TAPE SET
- SETUP MENU
- OTHERS

Изменение установок меню

Для того, чтобы исчезла индикация меню
Нажмите кнопку MENU.

Пункты меню отображаются в виде приведенных ниже пиктограмм:

- MANUAL SET
- CAMERA SET
- PLAYER SET
- LCD/VF SET (только DCR-TRV320E)/ LCD SET (DCR-TRV120E/TRV125E)
- MEMORY SET (только DCR-TRV320E)
- TAPE SET
- SETUP MENU
- OTHERS

English

Selecting the mode setting of each item

● is the default setting.

Menu items differ according to the position of the POWER switch.
The LCD screen and the viewfinder show only the items you can operate at the moment.

Icon/item	Mode	Meaning	POWER switch
AUTO SHTR	● ON	To automatically activate the electronic shutter when shooting in bright conditions	CAMERA
	OFF	To not automatically activate the electronic shutter even when shooting in bright conditions	
D ZOOM	● OFF	To deactivate digital zoom. Up to 25× zoom is carried out.	CAMERA MEMORY
	50×	To activate digital zoom. More than 25× to 50× zoom is performed digitally. (p. 24)	
	100×*	To activate digital zoom. More than 25× to 100× zoom is performed digitally. (p. 24)	
16:9WIDE	● OFF	—	CAMERA
	ON	To record a 16:9 wide picture (p. 45)	
STEADYSHOT	● ON	To compensate for camera-shake	CAMERA MEMORY
	OFF	To cancel the SteadyShot function. Natural pictures are produced when shooting a stationary object with a tripod.	
N.S. LIGHT	● ON	To use the NightShot Light function (p. 28)	CAMERA MEMORY
	OFF	To cancel the NightShot Light function	

* 125× (DCR-TRV125E only)

Notes on the SteadyShot function
• The SteadyShot function will not correct excessive camera-shake.
• Attachment of a conversion lens (not supplied) may influence the SteadyShot function.

If you cancel the SteadyShot function
The SteadyShot off indicator "✋" appears. Your camcorder prevents excessive compensation for camera-shake.

Changing the menu settings

Icon/item	Mode	Meaning	POWER switch
HiFi SOUND	● STEREO	To play back a stereo tape or dual sound track tape with main and sub sound	PLAYER
	1	To play back dual sound track tape with main sound	
	2	To play back a dual sound track tape with sub sound	
TBC*	● ON	To correct jitter	PLAYER
	OFF	To not correct jitter. Set TBC to OFF when playing back a tape on which you have dubbed over and recorded the signal of a TV game or similar machine.	
TBC stands for "Time Base Corrector".			
DNR*	● ON	To reduce picture noise	PLAYER
	OFF	To reduce a conspicuous afterimage when the picture has a lot of movement	
DNR stands for "Digital Noise Reduction".			
AUDIO MIX		To adjust the balance between the stereo 1 and stereo 2 (ST1 ▲ ST2)	PLAYER
NTSC PB	● ON PAL TV	To playback a tape recorded on your camcorder on a PAL system TV	PLAYER
	NTSC 4.43	To playback a tape recorded in the NTSC colour system on a TV with the NTSC 4.43 mode	
PB MODE	● AUTO	To automatically select the system (Hi8/standard 8 or Digital8) that was used to record on the tape, and play back the tape	PLAYER
	Hi8/8	To play back a tape that was recorded in the Hi8/ standard 8 system when your camcorder does not automatically distinguish the recording system	

* When you play back tapes recorded in the Hi8/standard 8 system only.

Notes on AUDIO MIX
• When playing back a tape recorded in the 16-bit mode, you cannot adjust the balance.
• You can adjust the balance only for tapes recorded in the Digital8 system.

Note on NTSC PB
When you play back a tape on a Multi System TV, select the best mode while viewing the picture on the TV.

Note on PB MODE
The mode will return to the default setting when:
– you remove the battery pack or power source.
– you turn the POWER switch.

Changing the menu settings

Icon/item	Mode	Meaning	POWER switch
LCD B. L.	● BRT NORMAL	To set the brightness on the LCD screen normal	PLAYER CAMERA MEMORY
	BRIGHT	To brighten the LCD screen	
LCD COLOUR		To adjust the colour on the LCD screen (To lighten ◀▶ To darken)	PLAYER CAMERA MEMORY
VF B.L.*	● BRT NORMAL	To set the brightness in the viewfinder normal	PLAYER CAMERA MEMORY
	BRIGHT	To brighten the viewfinder	
CONTINUOUS*	● OFF	Not to record continuously	MEMORY
	MULTI SCRN	To record 9 images continuously (p. 97)	
QUALITY*	● FINE	To record still images in the fine image quality mode, using the "Memory Stick"	PLAYER MEMORY
	STANDARD	To record still images in the standard image quality mode, using the "Memory Stick"	
FLD./FRAME*	● FIELD	To record moving subjects	MEMORY
	FRAME	To record stopping subjects in high quality	
PRINT MARK*	● OFF	Not to write print marks on still pictures	PLAYER MEMORY
	ON	To write a print mark on the recorded still images you want to print out later	
PROTECT*	● OFF	Not to protect still images	PLAYER MEMORY
	ON	To protect selected still iamges against accidental erasure (p. 116)	
SLIDE SHOW*		To play back images in a continuous loop (p. 114)	MEMORY
DELETE ALL*		To delete all the images (p. 119)	PLAYER MEMORY
FORMAT*	● RETURN	To cancel formatting.	PLAYER MEMORY
	FORMAT	To format an inserted "Memory Stick." 1. Select FORMAT with the SEL/PUSH EXEC dial, then press the dial. 2. Turn the SEL/PUSH EXEC dial to select FORMAT, then press the dial. 3. After "EXECUTE" appears, press the SEL/PUSH EXEC dial. "FORMATTING" appears during formatting. "COMPLETE" appears when formatting is finished.	
PHOTO SAVE*		To duplicate still images (p. 107)	PLAYER

* DCR-TRV320E only

Notes on LCD B.L. and VF.B.L.
• When you select "BRIGHT", battery life is reduced by about 10 percent during recording.
• When you use power sources other than the battery pack, "BRIGHT" is automatically selected.

Notes on formatting
• Supplied or optional "Memory Stick"s have been formatted at factory. Formatting with this camcorder is not required.
• Do not turn the POWER switch or press any button while the display shows "FORMATTING."
• You cannot format the "Memory Stick" if the write-protect tab on the "Memory Stick" is set to LOCK.
• Format again if the message "⊠" appears.

Formatting erases all information on the "Memory Stick"
Check the contents of the "Memory Stick" before formatting:
• Formatting erases sample images on the "Memory Stick"
• Formatting erases the protected image data on the "Memory Stick."

Changing the menu settings

Icon/item	Mode	Meaning	POWER switch
REC MODE	● SP	To record in the SP (Standard Play) mode	PLAYER CAMERA
	LP	To increase the recording time to 1.5 times the SP mode	
AUDIO MODE	● 12BIT	To record or play back in the 12-bit mode (two stereo sounds)	PLAYER* CAMERA
	16BIT	To record or play back in the 16-bit mode (the one stereo sound with high quality)	
REMAIN	● AUTO	To display the remaining tape bar: • for about 8 seconds after your camcorder is turned on and calculates the remaining amount of tape • for about 8 seconds after a cassette is inserted and your camcorder calculates the remaining amount of tape • for about 8 seconds after ► is pressed in PLAYER mode • for about 8 seconds after DISPLAY is pressed to display the screen indicators • for the period of tape rewinding, forwarding or picture search in the PLAYER mode	PLAYER CAMERA
	ON	To always display the remaining tape bar	
DATA CODE	● DATE/CAM	To display date, time and recording data during playback	PLAYER
	DATE	To display date and time during playback	

Note on REC MODE
When you record on the standard 8 tape, your camcorder records in the SP mode even you select the LP mode in the menu settings. In this case, the indicator "8 mm TAPE → SP REC, Hi8 TAPE → LP/SP REC" appears on the LCD screen or in the viewfinder. Use the Hi8 tapes for the LP mode.

Notes on the LP mode
- When you record a tape in the LP mode on your camcorder, we recommend playing the tape on your camcorder. When you play back the tape on other camcorders or VCRs, noise may occur in images or sound.
- When you record in the SP and LP modes on one tape or you record some scenes in the LP mode, the playback image may be distorted or the time code may not be written properly between scenes.

Note on AUDIO MODE
When playing back a tape recorded in the 16-bit mode, you cannot adjust the balance in AUDIO MIX.

***To dub a tape to another VCR**
You cannot select AUDIO MODE for tapes recorded in the Digital8 system. You, however, can select AUDIO MODE when you dub tapes recorded in the Hi8/standard 8 system to another VCR using the i.LINK cable.

Changing the menu settings

Icon/item	Mode	Meaning	POWER switch
CLOCK SET		To reset the date or time (p. 89)	CAMERA MEMORY
LTR SIZE	● NORMAL	To display selected menu items in normal size	PLAYER CAMERA MEMORY
	2×	To display selected menu items at twice the normal size	
DEMO MODE	● ON	To make the demonstration appear	CAMERA
	OFF	To cancel the demonstration mode	

Notes on DEMO MODE
- You cannot select DEMO MODE when a cassette is inserted in your camcorder.
- DEMO MODE is set to STBY (Standby) at the factory and the demonstration starts about 10 minutes after you have set the POWER switch to CAMERA without a cassette inserted. To cancel the demonstration, insert a cassette, set the POWER switch to other than CAMERA, or set DEMO MODE to OFF.
- When NIGHTSHOT is set to ON, the "NIGHTSHOT" indicator appears on the LCD screen or in the viewfinder and you cannot select DEMO MODE in the menu settings.

Changing the menu settings

Icon/item	Mode	Meaning	POWER switch
WORLD TIME		To set the clock to the local time. Turn the SEL/PUSH EXEC dial to set a time difference. The clock changes by the time difference you set here. If you set the time difference to 0, the clock returns to the originally set time.	CAMERA MEMORY
BEEP	● MELODY	To output the melody when you start/stop recording or when an unusual condition occurs on your camcorder	PLAYER CAMERA MEMORY
	NORMAL	To output the beep instead of the melody	
	OFF	To cancel the melody and beep sound	
COMMANDER	● ON	To activate the Remote Commander supplied with your camcorder	PLAYER CAMERA MEMORY
	OFF	To deactivate the Remote Commander to avoid remote control misoperation caused by other VCR's remote control	
DISPLAY	● LCD	To show the display on the LCD screen and in the viewfinder	PLAYER CAMERA MEMORY
	V-OUT/LCD	To show the display on the TV screen, LCD screen and in the viewfinder	
REC LAMP	● ON	To light up the camera recording lamp at the front of your camcorder	CAMERA MEMORY
	OFF	To turn the camera recording lamp off so that the subject is not aware of the recording	
INDICATOR	● BL OFF	To turn off the backlight on display window	PLAYER CAMERA MEMORY
	BL ON	To turn on the backlight	

Note
If you press DISPLAY with DISPLAY set to V-OUT/LCD in the menu settings, the picture from a TV or VCR will not appear on the LCD screen even when your camcorder is connected to outputs on the TV or VCR. (Except when your camcorder is connected with the i.LINK cable.)

In more than 5 minutes after removing the power source
The AUDIO MIX, COMMANDER and HiFi SOUND items are returned to their default settings. The other menu items are held in memory even when the battery is removed, as long as the lithium battery is installed.

Notes on INDICATOR
- When you select BL ON, battery life is reduced by about 10 percent during recording.
- When you use power sources other than the battery pack, BL ON is automatically selected.

Resetting the date and time

The default clock setting is set to London time for United Kingdom and to Paris time for the other European countries Time.
The date and time are held in memory by the lithium battery. If you replace the lithium battery with the battery pack or other power source connected, you need not reset the date and time. You must reset the date and time when the lithium battery becomes dead with no power source installed.
First, set the year, then the month, the day, the hour and then the minute.

(1) While the camcorder is in the standby mode, press MENU to display the menu settings.
(2) Turn the SEL/PUSH EXEC dial to select , then press the dial.
(3) Turn the SEL/PUSH EXEC dial to select CLOCK SET, then press the dial.
(4) Turn the SEL/PUSH EXEC dial to adjust the desired year, then press the dial.
(5) Set the month, day and hour by turning the SEL/PUSH EXEC dial and pressing the dial.
(6) Set the minute by turning the SEL/PUSH EXEC dial and pressing the dial by the time signal. The clock starts to move.
(7) Press MENU to make the menu settings disappear.

Переустановка даты и времени

Установка часов по умолчанию соответствует времени Лондона для моделей Соединенного Королевства и времени Парижа для других европейских моделей.
Дата и время сохраняются в памяти с помощью литиевой батарейки. Если Вы от литиевой батарейки переключитесь на батарейный блок или другой подсоединенный источник питания, Вам нужно будет переустановить дату и время. Вам нужно также переустановить дату и время, когда литиевая батарейка разрядится и в это время не будет вставлен источник питания.
Сначала установите год, затем месяц, день, час и минуту.

(1) В режиме ожидания видеокамеры нажмите кнопку MENU для отображения установок меню.
(2) Поверните диск SEL/PUSH EXEC для выбора индикации , а затем нажмите диск.
(3) Поверните диск SEL/PUSH EXEC для выбора команды CLOCK SET, а затем нажмите диск.
(4) Поверните диск SEL/PUSH EXEC для выбора нужного года, а затем нажмите диск.
(5) Установите месяц, день и час путем вращения диска SEL/PUSH EXEC и нажимания диска.
(6) Установите минуту путем вращения диска SEL/PUSH EXEC и нажимания диска в момент передачи сигнала точного времени. Часы начнут функционировать.
(7) Нажмите кнопку MENU для того, чтобы исчезли установки меню.

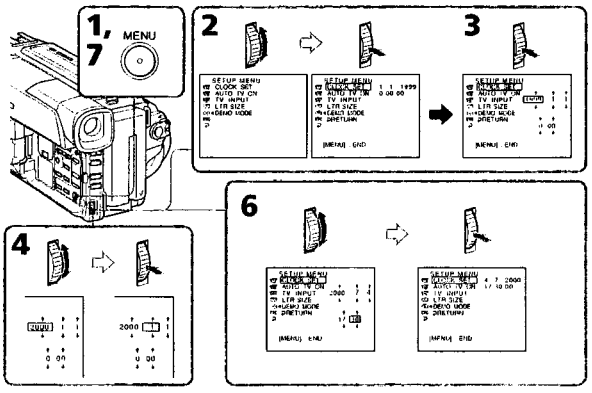

Resetting the date and time

The year changes as follows:

1999 ⟷ 2000 ⟵ ····· ⟶ 2029

If you do not set the date and time
"– –:– –:– –" is recorded on the tape and the "Memory Stick" (DCR-TRV320E only).

Note on the time indicator
The internal clock of your camcorder operates on a 24-hour cycle.

Переустановка даты и времени

Год изменяется следующим образом:

1999 ⟷ 2000 ⟵ ····· ⟶ 2029

Если Вы не установили дату и время
На ленту и "Memory Stick" будет записываться индикация "– –:– –:– –" (Только DCR-TRV320E).

Примечание по индикатору времени
Встроенные часы Вашей видеокамеры работают в 24-часовом режиме.

Digital8 (8) system, recording and playback

What is the "Digital8 (8) system"?
This video system has been developed to enable digital recording to Hi8 (Hi8)/Digital8 (8) video cassette .

Usable cassette tapes
We recommend using Hi8 (Hi8)/Digital8 (8) video cassette.*
The recording time when you use your Digital8 (8) system camcorder on Hi8 (Hi8)/standard 8 (8) tape is half the recording time when using the conventional Hi8 (Hi8)/standard 8 (8) system camcorder. (120 minutes of recording time becomes 60 minutes in the SP mode.)
* If you use standard 8 (8) tape, be sure to play back the tape on this camcorder. Mosaic pattern noise may appear when you play back standard 8 (8) tape on other VCRs (including other DCR-TRV120E/TRV125E/TRV320E).

Note
Tapes recorded in the Digital8 (8) system cannot be played back on Hi8 (Hi8)/standard 8 (8) (analog) system machine.

(8) is a trademark.
(Hi8) is a trademark.
(8) is a trademark.

Playback system

The Digital8 (8) system or Hi8 (Hi8)/standard 8 (8) system is automatically detected before the tape is played back.
During playback of tapes recorded in the Hi8 (Hi8)/standard 8 (8) system, digital signals are output as the image signals from the DV OUT jack.

Display during automatic detection of system
The Digital8 (8) system or Hi8 (Hi8)/standard 8 (8) system is automatically detected, and the playback system is automatically switched to. During switching of systems, the screen turns blue, and the following displays appear. A hissing noise also sometimes can be heard.

(8) → (Hi8)/(8): During switching from Digital8 (8) to Hi8 (Hi8)/standard 8 (8)
(Hi8)/(8) → (8): During switching from Hi8 (Hi8)/standard 8 (8) to Digital8 (8)

Цифровая система Digital8 (8), запись и воспроизведение

Что такое "Цифровая система Digital8 (8)"?
Эта видеосистема была разработана для обеспечения цифровой записи на видеокассеты Hi8 (Hi8)/Digital8 (8).

Используемые кассеты
Рекомендуется использовать видеокассеты Hi8 (Hi8)/Digital8 (8).*
Время записи при использовании Вашей видеокамеры системы Digital8 (8) на ленте Hi8 (Hi8)/стандартной ленте 8 (8) в два раз меньше, чем при использовании обычной видеокамеры Hi8 (Hi8)/видеокамеры стандартной системы 8 (8). (120 минут времени записи станут равными 60 минутам в режиме SP).
* При использовании стандартной ленты 8 (8), ее следует воспроизводить на этой же видеокамере. При воспроизведении стандартной ленты 8 (8) на других КВМ (включая другие аппараты DCR-TRV120E/TRV125E/TRV320E) могут появится помехи типа мозаики.

Примечание
Ленты, записанные в цифровой системе Digital8 (8), не могут быть воспроизведены на аппаратуре системы Hi8 (Hi8)/стандартной системы 8 (8) (аналоговой).

(8) является фирменным знаком.
(Hi8) является фирменным знаком.
(8) является фирменным знаком.

Система воспроизведения

Цифровая система Digital8 (8) или Hi8 (Hi8)/стандартная система 8 (8) автоматически детектируется перед воспроизведением ленты. Во время воспроизведения лент, записанных в системе Hi8 (Hi8)/стандартной системы 8 (8), цифровые сигналы выводятся в качестве сигналов изображения через выходное гнездо DV OUT.

Индикация во время автоматического детектирования системы
СЦифровая система Digital8 (8) или Hi8 (Hi8)/стандартная система 8 (8) автоматически детектируется, а система воспроизведения автоматически включается. Во время выключения систем, экран становится голубым и появляются следующие индикации. Может быть также слышен свистящий шум.

(8) → (Hi8)/(8): Во время переключения с системы Digital8 (8) на систему Hi8 (Hi8)/стандартную систему 8 (8)
(Hi8)/(8) → (8): Во время переключения с системы Hi8 (Hi8)/стандартной системы 8 (8) на цифровую систему Digital8 (8)

Digital8 (8) system, recording and playback

When you play back

Playing back an NTSC-recorded tape
You can play back tapes recorded in the NTSC video system on the LCD screen, if the tape is recorded in the SP mode.

When you playback a dual sound track tape

When you use tapes recorded in the Digital8 (8) system
When you play back a Digital8 (8) system tape which is dubbed from a dual sound track tape recorded in the DV system, set HiFi SOUND to the desired mode in the menu settings (p. 76).

Sound from speaker

HiFi Sound Mode	Playing back a stereo tape	Playing back a dual sound track tape
STEREO	Stereo	Main sound and sub sound
1	Lch	Main sound
2	Rch	Sub sound

When you use a tape recorded in the Hi8/standard 8 system
When you play back a dual sound track tape recorded in an AFM HiFi stereo system, set HiFi SOUND to the desired mode in the menu settings (p. 76).

Sound from speaker

HiFi Sound Mode	Playing back a stereo tape	Playing back a dual sound track tape
STEREO	Stereo	Main sound and sub sound
1	Monaural	Main sound
2	Unnatural Sound	Sub sound

You cannot record dual sound programmes on your camcorder.

Цифровая система Digital8 (8), запись и воспроизведение

При воспроизведении

Воспроизведение лент, записанных в системе NTSC
Вы можете воспроизводить ленты, записанные в видеосистеме NTSC, на экране ЖКД, если лента записана в режиме SP.

При воспроизведении ленты с двойной звуковой дорожкой

При использовании лент, записанных в цифровой системе Digital8 (8)
При воспроизведении ленты в цифровой системе Digital8 (8), на которую выполнена перезапись ленты с двойной звуковой дорожкой, записанной в цифровой видеосистеме DV, установите команду HiFi SOUND в нужный режим в установках меню (стр. 76).

Звук от динамика

Режим звучания HiFi	Воспроизведение стереофонической ленты	Воспроизведение ленты с двойной звуковой дорожкой
STEREO	Стереофонический звук	Основной звук и вспомогательный звук
1	Левый канал	Основной звук
2	Правый канал	Вспомогательный звук

При использовании лент, записанных в системе Hi8/стандартной системе 8
При воспроизведении ленты с двойной звуковой дорожкой, записанной в стереофонической системе AFM HiFi, установите команду HiFi SOUND в нужный режим в установках меню (стр. 76).

Звук от динамика

Режим звучания HiFi	Воспроизведение стереофонической ленты	Воспроизведение ленты с двойной звуковой дорожкой
STEREO	Стереофонический звук	Основной звук и вспомогательный звук
1	Монофонический звук	Основной звук
2	Необычный звук	Вспомогательный звук

Вы не можете записывать программы с двойным звучанием на Вашей видеокамере.

Changing the lithium battery in your camcorder

When replacing the lithium battery, keep the battery pack or other power source attached. Otherwise, you will need to reset the date, time and other items in the menu settings hold in memory by the lithium battery.

Insert the battery with the positive (+) side facing out. When the battery becomes weak or dead, the indicator flashes on the LCD screen or in the viewfinder for about 5 seconds when you set the POWER switch to CAMERA. In this case, **replace the battery with a Sony CR2025 lithium battery. Use of any other battery may present a risk of fire or explosion.** Discard used batteries according to the manufacturer's instructions.

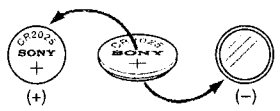

WARNING
The battery may explode if mistreated. Do not recharge, disassemble, nor dispose of it in fire.

Lithium battery
- Keep the lithium battery out of the reach of children.
- Should the battery be swallowed, immediately consult a doctor.
- Wipe the battery with a dry cloth to ensure good contact.

Lithium battery installed at the factory
This battery may not last 1 year.

Замена литиевой батарейки в Вашей видеокамере

При замене литиевой батарейки батарейный блок или другой источник питания должен быть прикреплен к видеокамере. В противном случае Вам понадобится переустанавливать дату, время и другие пункты в установках меню, хранимых в памяти видеокамеры с помощью литиевой батарейки.

Вставьте батарейку так, чтобы положительный (+) полюс был обращен наружу. Если батарейка станет слабой или разрядится, индикатор будет мигать на экране ЖКД или в видоискателе около 5 секунд, если переключатель POWER установлен в положение CAMERA. В этом случае, **замените батарейку на литиевую батарейку Sony CR2025. Использование другой батарейки может привести к пожару или взрыву.** Ликвидируйте использованные батарейки в соответствии с инструкциями предприятия-изготовителя.

ВНИМАНИЕ
Если с батарейкой неправильно обращаться, она может взорваться. Не перезаряжайте, не разбирайте и не бросайте в огонь батарейку.

Литиевая батарейка
- Храните литиевую батарейку в месте, не доступном для детей.
- В случае, если кто-либо случайно проглотит батарейку, следует немедленно обратиться к врачу.
- Протрите батарейку сухой тканью для обеспечения хорошего контакта.

Литиевая батарейка, установленная на заводе
Этой батарейки может не хватить на 1 год.

Changing the lithium battery in your camcorder

Changing the lithium battery

(1) Open the LCD panel and open the lid of the lithium battery compartment.
(2) Push the lithium battery up once and pull it out from the holder.
(3) Install a Sony CR2025 lithium battery with the positive (+) side facing out.
(4) Close the lid.

Замена литиевой батарейки в Вашей видеокамере

Замена литиевой батарейки

(1) Откройте панель ЖКД и откройте крышку отсека для литиевой батарейки.
(2) Нажмите литиевую батарейку вверх один раз и выньте ее из держателя.
(3) Установите литиевую батарейку Sony CR2025 так, чтобы положительный (+) полюс был обращен наружу.
(4) Закройте крышку.

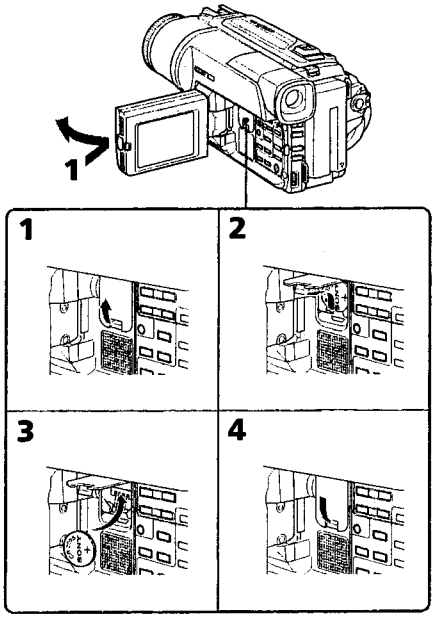

English

Troubleshooting

If you run into any problem using your camcorder, use the following table to troubleshoot the problem. If the problem persists, disconnect the power source and contact your Sony dealer or local authorized Sony service facility. If "C:□□:□□" appears on the LCD screen or in the viewfinder, the self-diagnosis display function has worked. See page 132.

In the recording mode

Symptom	Cause and/or Corrective Actions
START/STOP does not operate.	• The POWER switch is set to OFF (CHARGE) or PLAYER. → Set it to CAMERA. (p. 21) • The tape has run out. → Rewind the tape or insert a new one. (p. 19, 33) • The write-protect tab is set to expose the red mark. → Use a new tape or slide the tab. (p. 20) • The tape is stuck to the drum (moisture condensation). → Remove the cassette and leave your camcorder for at least 1 hour to acclimatize. (p. 144)
The power goes off.	• While being operated in the CAMERA mode, your camcorder has been in the standby mode for more than 3 minutes. → Set the POWER switch to OFF (CHARGE) and then to CAMERA again. (p. 21)
The image on the viewfinder screen is not clear.	• The viewfinder lens is not adjusted. → Adjust the viewfinder lens. (p. 25)
The SteadyShot function does not work.	• STEADYSHOT is set to OFF in the menu settings. → Set it to ON. (p. 76)
The autofocusing function does not work.	• FOCUS is set to MANUAL. → Set it to AUTO. (p. 57) • Shooting conditions are not suitable for autofocus. → Set FOCUS to MANUAL to focus manually. (p. 57)
The fader function does not work.	• The digital effect function is working. → Cancel it. (p. 52)
The picture does not appear in the viewfinder.	• The LCD panel is open. → Close the LCD panel. (p. 23)
You cannot record in the LP mode.	• The tape is the standard 8 tape. → Use Hi8 Hi8/Digital8 tapes.

Additional Information Дополнительная информация

(Continued on the following page)

Troubleshooting

Symptom	Cause and/or Corrective Actions
A vertical band appears when you shoot a subject such as lights or a candle flame against a dark background.	• The contrast between the subject and background is too high. This is not a malfunction.
A vertical band appears when you shoot a very bright subject.	• This is not a malfunction.
Some tiny white spots appear on the LCD screen or in the viewfinder.	• Slow shutter, low lux or Super NightShot mode is activated. This is not a malfunction.
An unknown picture is displayed on the LCD screen or in the viewfinder.	• If 10 minutes elapse after you set the POWER switch to CAMERA or DEMO MODE is set to ON in the menu settings without a cassette inserted, your camcorder automatically starts the demonstration. → Insert a cassette and the demonstration stops. You can also cancel DEMO MODE. (p. 81)
The picture is recorded in incorrect or unnatural colours.	• NIGHTSHOT is set to ON. → Set it to OFF. (p. 28)
Picture appears too bright, and the subject does not appear on the LCD screen or in the viewfinder.	• NIGHTSHOT is set to ON in a bright place. → Set it to OFF, or use the NightShot function in a dark place. (p. 28)
A horizontal black band appears when shooting a TV screen or computer screen.	• Set STEADYSHOT to OFF in the menu settings (p. 76)

In the playback mode

Symptom	Cause and/or Corrective Actions
The tape does not move when a video control button is pressed.	• The POWER switch is set to CAMERA, OFF (CHARGE) or MEMORY (DCR-TRV320E only). → Set it to PLAYER. (p. 33)
The playback button does not work.	• The tape has run out. → Rewind the tape. (p. 33)
There are horizontal lines on the picture or the playback picture is not clear or does not appear.	• The video head may be dirty. → Clean the heads using the Sony V8-25CLD cleaning cassette (not supplied). (p. 145)
No sound or only a low sound is heard when playing back a tape.	• The stereo tape is played back with HiFi SOUND set to 2 in the menu settings. → Set it to STEREO. (p. 76) • The volume is turned to minimum. → Open the LCD panel and press VOLUME +. (p. 33) • AUDIO MIX is set to ST2 side in the menu settings. → Adjust AUDIO MIX. (p. 76)
The date search does not work correctly.	• The tape has a blank portion in the recorded portion (p. 68)
The picture which is recorded in the Digital8 system is not played back.	• PB MODE is set to Hi8/8 in the menu settings. → Set it to AUTO. (p. 76)
The tape which is recorded in the Hi8/ standard 8 system is not played back correctly.	• Set PB MODE to Hi8/8 in the menu settings. (p. 76)

Troubleshooting

In the recording and playback modes

Symptom	Cause and/or Corrective Actions
The power does not turn on.	• The battery pack is not installed, or is dead or nearly dead. → Install a charged battery pack. (p. 12, 13) • The AC power adaptor is not connected to the mains. → Connect the AC power adaptor to the mains. (p. 18)
The end search function does not work.	• The tape was ejected after recording. • You have not recorded on the new cassette yet.
The end search function does not work correctly.	• The tape has a blank portion in the beginning or middle.
The battery pack is quickly discharged.	• The operating temperature is too low. • The battery pack is not fully charged. → Charge the battery pack fully again. (p. 13) • The battery pack is completely dead, and cannot be recharged. → Replace with a new battery pack. (p. 12)
The battery remaining indicator does not indicate the correct time.	• You have used the battery pack in an extremely hot or cold environment for a long time. • The battery pack is completely dead, and cannot be recharged. → Replace with a new battery pack. (p. 12) • The battery is dead. → Use a charged battery pack. (p. 12, 13)
The power goes off although the battery remaining indicator indicates that the battery pack has enough power to operate.	• Charge the battery pack fully again so that the indication on the battery remaining indicator is correct.
The cassette cannot be removed from the holder.	• The power source is disconnected. → Connect it firmly. (p. 13, 18) • The battery is dead. → Use a charged battery pack. (p. 12, 13)
The ⓓ and ⏏ indicators flash and no functions except for cassette ejection work.	• Moisture condensation has occurred. → Remove the cassette and leave your camcorder for at least 1 hour to acclimatize. (p. 144)

Additional Information Дополнительная информация

(Continued on the following page)

When operating using the "Memory Stick" – DCR-TRV320E only

Symptom	Cause and/or Corrective Actions
The "Memory Stick" does not function.	• The POWER switch is set to CAMERA or OFF (CHARGE). → Set it to MEMORY. (p. 94) • "Memory Stick" is not inserted. → Insert a "Memory Stick". (p. 93)
Recording does not function.	• The "Memory Stick" has already been recorded to its full capacity. → Erase unnecessary images and record again. (p. 118, 96) • Unformatted "Memory Stick" is inserted. → Format the "Memory Stick". (p. 79) • The write-protect tab on the "Memory Stick" is set to LOCK. → Release the lock. (p. 91)
The image cannot be deleted.	• The image is protected. → Cancel image protection. (p. 116) • The write-protect tab on the "Memory Stick" is set to LOCK. → Release the lock. (p. 91)
You cannot format the "Memory Stick".	• The write-protect tab on the "Memory Stick" is set to LOCK. → Release the lock. (p. 91)
Deleting all the images cannot be carried out.	• The write-protect tab on the "Memory Stick" is set to LOCK. → Release the lock. (p. 91)
You cannot protect the image.	• The write-protect tab on the "Memory Stick" is set to LOCK. → Release the lock. (p. 91) • The image to protect is not played back. → Press MEMORY PLAY to play back the image. (p. 109)
You cannot write a print mark on the still image.	• The write-protect tab on the "Memory Stick" is set to LOCK. → Release the lock. (p. 91) • The image to write a print mark is not played back. → Press MEMORY PLAY to play back the image. (p. 109)
The photo save function does not work.	• The write-protect tab on the "Memory Stick" is set to LOCK. → Release the lock. (p. 91)

Others

Symptom	Cause and/or Corrective Actions
The Remote Commander supplied with your camcorder does not work.	• COMMANDER is set to OFF in the menu settings. → Set it to ON. (p. 76) • Something is blocking the infrared rays. → Remove the obstacle. • The batteries are inserted in the battery holder with the + – polarities incorrectly matching the + – marks. → Insert the batteries with the correct polarity. (p. 158) • The batteries are dead. → Insert new ones. (p. 158)
The melody or beep sounds for 5 seconds.	• Moisture condensation has occurred. → Remove the cassette and leave your camcorder for at least 1 hour to acclimatize. (p. 144) • Some troubles has occurred in your camcorder. → Remove the cassette and insert it again, then operate your camcorder.
While charging the battery pack, no indicator appears or the indicator flashes in the display window.	• The AC power adaptor is disconnected. → Connect it firmly. (p. 18) • Something is wrong with the battery pack. → Contact your Sony dealer or local authorized Sony service facility.

English

Self-diagnosis display

Your camcorder has a self-diagnosis display function. This function displays the current condition of your camcorder as a 5-digit code (a combination of a letter and figures) on the LCD screen, in the viewfinder or in the display window. If a 5-digit code is displayed, check the following code chart. The last two digits (indicated by □□) will differ depending on the state of your camcorder.

LCD screen, viewfinder or display window

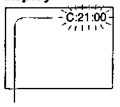

Self-diagnosis display
- C:□□:□□
  You can service your camcorder yourself.
- E:□□:□□
  Contact your Sony dealer or local authorized Sony facility.

Five-digit display	Cause and/or Corrective Actions
C:04:□□	• You are using a battery pack that is not an "InfoLITHIUM" battery pack. → Use an "InfoLITHIUM" battery pack. (p. 17)
C:21:□□	• Moisture condensation has occurred. → Remove the cassette and leave your camcorder for at least 1 hour to acclimatize. (p. 144)
C:22:□□	• The video heads are dirty. → Clean the heads using the Sony V8-25CLD cleaning cassette (not supplied). (p. 145)
C:31:□□ C:32:□□	• A malfunction other than the above that you can service has occurred. → Remove the cassette and insert it again, then operate your camcorder. → Disconnect the mains lead of the AC power adaptor or remove the battery pack. After reconnecting the power source, operate your camcorder.
E:61:□□ E:62:□□	• A malfunction that you cannot service has occurred. → Contact your Sony dealer or local authorized Sony service facility and inform them of the 5-digit code. (example: E:61:10)

If you are unable to rectify the problem even if you try corrective actions a few times, contact your Sony dealer or local authorized Sony service facility.

English

Warning indicators and messages

If indicators and messages appear on the LCD screen, in the viewfinder or in the display window, check the following:
See the page in parentheses "( )" for more information.

Warning indicators

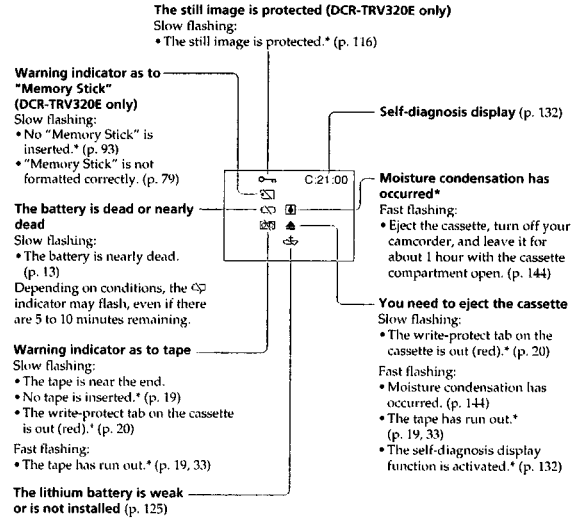

* You hear the melody or beep sound.

Warning indicators and messages

Warning messages

• CLOCK SET	Reset the date and time. (p. 89)
• FOR "InfoLITHIUM" BATTERY ONLY	Use an "InfoLITHIUM" battery pack. (p. 17)
• 8 mm TAPE → SP REC Hi8 TAPE → LP/SP REC	Use Hi8 Hi8/Digital 8 tapes when you record in the LP mode.** (p. 80)
• ⏏ TAPE END	The tape has run out.**
• NO TAPE	Insert a cassette tape.** (p. 19)
• CLEANING CASSETTE*	The video heads are dirty. (p. 145)
• FULL	The "Memory Stick" is full.** (DCR-TRV320E only) (p. 98)
•	The write-protect tab on the "Memory Stick" is set to LOCK.** (DCR-TRV320E only) (p. 91)
• NO FILE	No still image is recorded on the "Memory Stick".** (DCR-TRV320E only) (p. 110)
• NO MEMORY STICK	No "Memory Stick" is inserted. (DCR-TRV320E only) (p. 93)

* The ⊗ indicator and "CLEANING CASSETTE" message appear one after another on the LCD screen or in the viewfinder.

** You hear the melody or beep sound.

Using your camcorder abroad

Using your camcorder abroad

You can use your camcorder in any country or area with the AC power adaptor supplied with your camcorder within 100 V to 240 V AC, 50/60 Hz.

Your camcorder is a PAL system based camcorder. If you want to view the playback picture on a TV, it must be a PAL system based TV with VIDEO/AUDIO input jack.
The following shows TV colour systems used overseas.

PAL system
Australia, Austria, Belgium, China, Czech Republic, Denmark, Finland, Germany, Great Britain, Holland, Hong Kong, Italy, Kuwait, Malaysia, New Zealand, Norway, Portugal, Singapore, Slovak Republic, Spain, Sweden, Switzerland, Thailand, etc.

PAL-M system
Brazil

PAL-N system
Argentina, Paraguay, Uruguay

NTSC system
Bahama Islands, Bolivia, Canada, Central America, Chile, Colombia, Ecuador, Jamaica, Japan, Korea, Mexico, Peru, Surinam, Taiwan, the Philippines, the U.S.A., Venezuela, etc.

SECAM system
Bulgaria, France, Guyana, Hungary, Iran, Iraq, Monaco, Poland, Russia, Ukraine, etc.

Simple setting of clock by time difference

You can easily set the clock to the local time by setting a time difference. Select WORLD TIME in the menu settings. See page 76 for more information.

Использование Вашей видеокамеры за границей

Использование Вашей видеокамеры за границей

Вы можете использовать Вашу видеокамеру в любой стране или области с помощью сетевого адаптера переменного тока, прилагаемого к Вашей видеокамере, который можно использовать в пределах от 100 В до 240 В переменного тока с частотой 50/60 Гц.

Ваша видеокамера основана на системе PAL. Если Вы хотите просмотреть воспроизводимое изображение на телевизоре, то это должен быть телевизор, основанный на системе PAL, с входными гнездами VIDEO/AUDIO.
Ниже приведены системы цветного телевидения, используемые за рубежом.

Система PAL
Австралия, Австрия, Бельгия, Великобритания, Германия, Голландия, Гонконг, Дания, Испания, Италия, Китай, Кувейт, Малайзия, Новая Зеландия, Норвегия, Португалия, Сингапур, Словацкая Республика, Таиланд, Финляндия, Чешская Республика, Швейцария, Швеция и т.д.

Система PAL-M
Бразилия

Система PAL-N
Аргентина, Парагвай, Уругвай

Система NTSC
Багамские острова, Боливия, Венесуэла, Канада, Колумбия, Корея, Мексика, Перу, Суринам, США, Тайвань, Филиппины, Центральная Америка, Чили, Эквадор, Ямайка, Япония и т.д.

Система SECAM
Болгария, Венгрия, Гвиана, Ирак, Иран, Монако, Польша, Россия, Украина, Франция и т.д.

Простая установка разницы во времени на часах

Вы можете легко установить часы на местное время путем установки разницы во времени. Выберите команду WORLD TIME в установках меню. Подробные сведения приведены на стр. 76.

Maintenance information and precautions

Moisture condensation

If your camcorder is brought directly from a cold place to a warm place, moisture may condense inside your camcorder, on the surface of the tape, or on the lens. In this condition, the tape may stick to the head drum and be damaged or your camcorder may not operate correctly. If there is moisture inside your camcorder, the beep sounds and the indicator flashes. When the ⏏ indicator flashes at the same time, the cassette is inserted in your camcorder. If moisture condenses on the lens, the indicator will not appear.

If moisture condensation occurred
None of the functions except cassette ejection will work. Eject the cassette, turn off your camcorder, and leave it for about 1 hour with the cassette compartment open. Your camcorder can be used again if the indicator does not appear when the power is turned on again.

Note on moisture condensation
Moisture may condense when you bring your camcorder from a cold place into a warm place (or vice versa) or when you use your camcorder in a hot place as follows:
- You bring your camcorder from a ski slope into a place warmed up by a heating device
- You bring your camcorder from an air-conditioned car or room into a hot place outside
- You use your camcorder after a squall or a shower
- You use your camcorder in a high temperature and humidity place

How to prevent moisture condensation
When you bring your camcorder from a cold place into a warm place, put your camcorder in a plastic bag and tightly seal it. Remove the bag when the air temperature inside the plastic bag has reached the surrounding temperature (after about 1 hour).

Информация по уходу за аппаратом и меры предосторожности

Конденсация влаги

Если видеокамера принесена прямо из холодного места в теплое, то внутри видеокамеры, на поверхности ленты или на объективе может произойти конденсация влаги. В таком состоянии лента может прилипнуть к барабану головки и будет повреждена или же видеокамера не сможет работать надлежащим образом. Если внутри видеокамеры произошла конденсация влаги, то прозвучит зуммерный сигнал, а на экране ЖКД будет мигать индикатор . Если в то же самое время будет мигать индикатор ⏏, это значит, что в видеокамеру вставлена кассета. Если влага сконденсировалась на объективе, индикатор появляться не будет.

Если произошла конденсация влаги
Ни одна из функций, кроме выталкивания кассеты, не будут работать. Извлеките кассету, выключите видеокамеру и оставьте ее приблизительно на 1 час с открытым кассетным. Если при повторном включении питания индикатор не появится на дисплее, Вы можете снова пользоваться видеокамерой.

Примечания по конденсации влаги
Влага может образоваться, если Вы принесете Вашу видеокамеру из холодного места в теплое (или наоборот) или когда Вы используете Вашу видеокамеру в жарком месте в следующих случаях:
- Вы принесли Вашу видеокамеру с лыжного склона в помещение, где функционирует обогреватель
- Вы принесли Вашу видеокамеру из автомобиля или из комнаты с воздушным кондиционированием в жаркое место на улице
- Вы используете видеокамеру после грозы или дождя
- Вы используете Вашу видеокамеру в очень жарком и влажном месте.

Как предотвратить конденсацию влаги
Если видеокамера принесена из холодного места в теплое, то положите видеокамеру в полиэтиленовый пакет и плотно заклейте его. Выньте видеокамеру из полиэтиленового пакета, когда температура воздуха внутри пакета достигнет температуры окружающего воздуха (приблизительно через 1 час).

Maintenance information and precautions

Maintenance information

Cleaning the LCD screen
If fingerprints or dust make the LCD screen dirty, we recommend using a LCD Cleaning Kit (not supplied) to clean the LCD screen.

Cleaning the video head
To ensure normal recording and clear pictures, clean the video heads.

When you playback/record in the Digital8 system
The video head may be dirty when:
- mosaic-pattern noise appears on the playback picture.
- playback pictures do not move.
- playback pictures are hardly visible.
- playback pictures do not appear.
- the ⊗ indicator and "CLEANING CASSETTE" message appear one after another on the LCD screen or in the viewfinder.

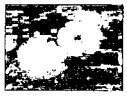

or/или

When you play back in the Hi8/Standard 8 (analog) system
The video head may be dirty when:
- playback pictures contain noise.
- playback pictures are hardly visible.
- playback pictures do not appear.

or/или

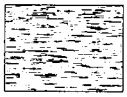

If the above problems occur, clean the video heads with the Sony V8-25CLD cleaning cassette (not supplied). Check the picture and if the above problems persists repeat cleaning.

Информация по уходу за аппаратом и меры предосторожности

Информация по уходу за аппаратом

Чистка экрана ЖКД
Если на экране ЖКД появятся отпечатки или пыль, рекомендуется воспользоваться очистительным набором для ЖКД (не прилагается) для чистки ЖКД.

Чистка видеоголовок
Для обеспечения нормальной записи и четкого изображения следует периодически чистить видеоголовки.

При воспроизведении/записи в цифровой системе Dgital8
Видеоголовки возможно загрязнены, если:
- На воспроизводимом изображении появляются помехи типа мозаики.
- Воспроизводимое изображение не двигается.
- Воспроизводимое изображение с трудом различимо.
- Воспроизводимое изображение не появляется на экране.
- На экране ЖКД или в видоискателе появляются один за другим индикатор ⊗ и сообщение "CLEANINING CASSETTE".

При воспроизведении в системе (аналоговой) Hi8/стандартной системе 8
Видеоголовки возможно загрязнены, если:
- Воспроизводимое изображение содержит помехи.
- Воспроизводимое изображение с трудом различимо.
- Воспроизводимое изображение не появляется на экране.

В случае возникновения указанных выше проблем, почистите видеоголовки с помощью очистительной кассеты Sony V8-25CLD (не прилагается). Проверьте изображение и, если описанные выше проблемы не устранились, повторите чистку.

Removing dust from inside the viewfinder (DCR-TRV120E/TRV125E)

(1) ❶Remove the screw with a screwdriver (not supplied). ❷Then, while holding the RELEASE knob up, ❸turn the eyecup in a counterclockwise direction and pull it out.
(2) Clean the surface with a commercially available blower for a still camera.
(3) Turn the eyecup in a clockwise direction, then replace the screw.

Caution
Do not remove any other screws. You may remove only the screw to remove the eyecup.

Удаление пыли изнутри видоискателя (DCR-TRV120E/TRV125E)

(1) ❶Отвинтите винт с помощью отвертки (не прилагается). ❷Затем, держа нажатой кнопку RELEASE, ❸поверните окуляр против часовой стрелки и потяните его.
(2) Почистите поверхность с помощью воздуходувки для фотоаппаратов, которая приобретается отдельно.
(3) Поверните окуляр по часовой стрелке, а затем завинтите винт обратно на место.

Внимание
Не отвинчивайте другие винты. Вы можете отвинчивать только винт для снятия окуляра.

Precautions

Camcorder operation

- Operate your camcorder on 7.2 V (battery pack) or 8.4 V (AC power adaptor).
- For DC or AC operation, use the accessories recommended in this operating instructions.
- If any solid object or liquid get inside the casing, unplug your camcorder and have it checked by a Sony dealer before operating it any further.
- Avoid rough handling or mechanical shock. Be particularly careful of the lens.
- Keep the POWER switch set to OFF (CHARGE) when you are not using your camcorder.
- Do not wrap your camcorder with a towel, for example, and operate it. Doing so might cause heat to build up inside.
- Keep your camcorder away from strong magnetic fields or mechanical vibration. Noise may appear on the image.
- Do not touch the LCD screen with your fingers or a sharp-pointed object.
- If your camcorder is used in a cold place, a residual image may appear on the LCD screen or in the viewfinder. This is not a malfunction.
- While using your camcorder, the back of the LCD screen may heat up. This is not a malfunction.

On handling tapes

Do not insert anything into the small holes on the rear of the cassette. These holes are used to sense the type and thickness of the tape and if the recording tab is in or out.

Camcorder care

- Remove the tape, and periodically turn on the power, operate the CAMERA and PLAYER sections and play back a tape for about 3 minutes when your camcorder is not to be used for a long time.
- Clean the lens with a soft brush to remove dust. If there are fingerprints on the lens, remove them with a soft cloth.
- Clean the camcorder body with a dry soft cloth, or a soft cloth lightly moistened with a mild detergent solution. Do not use any type of solvent which may damage the finish.
- Do not let sand get into your camcorder. When you use your camcorder on a sandy beach or in a dusty place, protect it from the sand or dust. Sand or dust may cause your camcorder to malfunction, and sometimes this malfunction cannot be repaired.

Меры предосторожности

Эксплуатация видеокамеры

- Эксплуатируйте видеокамеру от 7,2 В (батарейный блок) или 8,4 В (сетевой адаптер переменного тока)
- Что касается эксплуатации видеокамеры от постоянного и переменного тока, используйте принадлежности, рекомендуемые в данной инструкции по эксплуатации.
- Если какой-нибудь твердый предмет или жидкость попали внутрь корпуса, выключите видеокамеру и проверьте ее у дилера Sony перед дальнейшей ее эксплуатацией.
- Избегайте грубого обращения с видеокамерой или механических ударов. Будьте особенно осторожны с объективом.
- Если видеокамера не используется, установите выключатель POWER в положении OFF (CHARGE).
- Не заворачивайте Вашу видеокамеру, например, в полотенце, и не эксплуатируйте ее в таком состоянии. В противном случае может произойти повышение температуры внутри видеокамеры.
- Держите Вашу видеокамеру подальше от сильных магнитных полей или механической вибрации. На экране ЖКД или в видоискателе могут появиться помехи.
- Не прикасайтесь к экрану ЖКД своими пальцами или острыми предметами.
- При эксплуатации Вашей видеокамеры в холодном месте, на экране ЖКД или в видоискателе может появляться остаточное изображение. Это не является неисправностью.
- При эксплуатации Вашей видеокамеры, задняя сторона экрана ЖКД может нагреваться. Это не является неисправностью.

Обращение с лентами

Не вставляйте ничего в маленькие отверстия на задней стороне кассеты. Эти отверстия используются для определения типа и толщины ленты, а также для определения наличия или отсутствия лепестка защиты записи на ленте.

Уход за видеокамерой

- Периодически вынимайте кассету и включайте питание, оперируйте устройствами CAMERA и PLAYER и воспроизводите ленту порядка 3-х минут, если Ваша видеокамера не будет использоваться длительное время.
- Чистите объектив с помощью мягкой кисточки для удаления пыли. Если имеются отпечатки пальцев на объективе, удалите их с помощью мягкой ткани.
- Чистите корпус видеокамеры с помощью сухой мягкой ткани или мягкой ткани, слегка смоченной раствором умеренного моющего средства. Не используйте каких-либо типов растворителей, которые могут повредить отделку.
- Не допускайте попадания песка в видеокамеру. Если Вы используете видеокамеру на песчаном пляже или в каком-либо пыльном месте, предохраните аппарат от песка или пыли. Песок или пыль могут привести к неисправности аппарата, которая иногда может быть неисправимой.

Connection to your PC

When inputting the image recorded by Hi8/standard8 (analog) system into your PC, dub the image into a Digital8 or DV tape first, and then input it into your PC.

When inputting the image recorded by Hi8/standard 8 system into Sony VAIO

The Program Capture function of DVgate motion doesn't work. To use this function, dub the image into a Digital8 or DV tape first, and then input it into your Sony VAIO.

AC power adaptor

- Unplug the unit from the mains when you are not using the unit for a long time. To disconnect the mains lead, pull it out by the plug. Never pull the mains lead itself.
- Do not operate the unit with a damaged cord or if the unit has been dropped or damaged.
- Do not bend the mains lead forcibly, or place a heavy object on it. This will damage the cord and may cause fire or electrical shock.
- Prevent metallic objects from coming into contact with the metal parts of the connecting section. If this happens, a short may occur and the unit may be damaged.
- Always keep metal contacts clean.
- Do not disassemble the unit.
- Do not apply mechanical shock or drop the unit.
- While the unit is in use, particularly during charging, keep it away from AM receivers and video equipment. AM receivers and video equipment disturb AM reception and video operation.
- The unit becomes warm during use. This is not a malfunction.
- Do not place the unit in locations that are:
  - Extremely hot or cold
  - Dusty or dirty
  - Very humid
  - Vibrating

Подключение к Вашему персональному компьютеру

При вводе изображения, записанного в системе (аналоговой) Hi8/стандартной системе 8, в Ваш персональный компьютер, сначала сделайте копию изображения на цифровую ленту Digital8 или DV, а затем введите его в персональный компьютер.

При вводе изображения, записанного в системе Hi8/стандартной системе 8, в программу Sony VAIO

Функция захвата изображения DVgate motion не работает. Для использования этой функции сначала скопируйте изображение на цифровую ленту Digital8 или DV, а затем введите его в Вашу программу Sony VAIO.

Сетевой адаптер переменного тока

- Отсоедините аппарат от электрической сети, если он не используется длительное время. Для отсоединения сетевого шнура потяните его за разъем. Никогда не тяните за сам шнур.
- Не эксплуатируйте аппарат с поврежденным шнуром или же в случае, если аппарат упал или был поврежден.
- Не сгибайте сетевой провод силой и не ставьте на него тяжелые предметы. Это повредит провод и может привести к пожару или поражению электрическим током.
- Будьте осторожны, чтобы никакие металлические предметы не соприкасались с металлическими контактами соединительной пластины. Если это случится, то может произойти короткое замыкание, и аппарат может быть поврежден.
- Следите за тем, чтобы металлические контакты были чистыми.
- Не разбирайте аппарат.
- Не подвергайте аппарат механической вибрации и не роняйте его.
- При использовании аппарата, особенно во время зарядки, держите его подальше от приемников АМ-радиовещания и видеоаппаратуры. Приемники АМ-радиовещания и видеоаппаратура нарушают АМ-радиоприем и работу видеоаппаратуры.
- В процессе эксплуатации аппарат нагревается. Это является вполне нормальным.
- Не размещайте аппарат в местах:
  - Чрезмерно жарких или холодных
  - Пыльных или грязных
  - Очень влажных
  - Подверженных вибрации

Battery pack

- Use only the specified charger or video equipment with the charging function.
- To prevent accident from a short circuit, do not allow metal objects to come into contact with the battery terminals.
- Keep the battery pack away from fire.
- Never expose the battery pack to temperatures above 60°C (140°F), such as in a car parked in the sun or under direct sunlight.
- Keep the battery pack dry.
- Do not expose the battery pack to any mechanical shock.
- Do not disassemble nor modify the battery pack.
- Attach the battery pack to the video equipment securely.
- Charging while some capacity remains does not affect the original battery capacity.

Notes on dry batteries

To avoid possible damage from battery leakage or corrosion, observe the following:

- Be sure to insert the batteries with the + – polarities matched to the + – marks.
- Dry batteries are not rechargeable.
- Do not use a combination of new and old batteries.
- Do not use different types of batteries.
- Current flows from batteries when you are not using them for a long time.
- Do not use leaking batteries.

If batteries are leaking

- Wipe off the liquid in the battery compartment carefully before replacing the batteries.
- If you touch the liquid, wash it off with water.
- If the liquid get into your eyes, wash your eyes with a lot of water and then consult a doctor.

If any problem occurs, unplug your camcorder and contact your nearest Sony dealer.

Батарейный блок

- Используйте только рекомендуемое зарядное устройство или видеоаппаратуру с зарядной функцией.
- Для предотвращения несчастного случая из-за короткого замыкания не допускайте контакта металлических предметов с полюсами батарейного блока.
- Не располагайте батарейный блок вблизи огня.
- Не подвергайте батарейный блок воздействию температур свыше 60°C, например, в припаркованном под солнцем автомобиле или под прямым солнечным светом.
- Следите за тем, чтобы батарейный блок был сухим.
- Не подвергайте батарейный блок воздействию каких-либо механических ударов.
- Не разбирайте и не видоизменяйте батарейный блок.
- Прикрепляйте батарейный блок к видеоаппаратуре плотно.
- Зарядка в случае оставшейся емкости заряда не отражается на емкости первоначального заряда.

Примечания к сухим батарейкам

Во избежание возможного повреждения видеокамеры вследствие утечки внутреннего вещества батареек или коррозии соблюдайте следующее:

- При установке батареек соблюдайте правильную полярность + – в соответствии с метками + –.
- Сухие батарейки нельзя перезаряжать.
- Не используйте новые батарейки вместе со старыми.
- Не используйте батарейки разного типа.
- Если батарейки не используются длительное время, они постепенно разряжаются.
- Не используйте батарейки, которые потекли.

Если произошла утечка внутреннего вещества батареек

- Перед тем, как заменить батарейки, тщательно протрите остатки жидкости в отсеке для батареек.
- В случае попадания жидкости на кожу, промойте жидкость водой.
- В случае попадания жидкости в глаза, промойте свои глаза большим количеством воды, после чего обратитесь к врачу.

В случае возникновения каких-либо проблем, отключите Вашу видеокамеру от источника питания и обратитесь в ближайший сервисный центр Sony.

Identifying the parts and controls

Camcorder

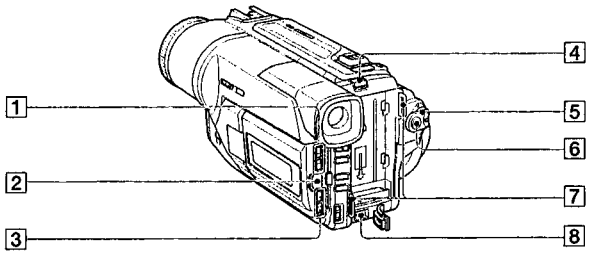

1 **LCD BRIGHT buttons** (p. 23)
2 **OPEN button** (p. 21)
3 **VOLUME buttons** (p. 33)
4 **BATT RELEASE lever** (p. 12)
5 **POWER switch** (p. 21)
6 **START/STOP button** (p. 21)
7 **Hooks for shoulder strap** (p. 154)
8 **DC IN jack** (p. 13)

This mark indicates that this product is a genuine accessory for Sony video products.
When purchasing Sony video products, Sony recommends that you purchase accessories with this "GENUINE VIDEO ACCESSORIES" mark.

Обозначение частей и регуляторов

Видеокамера

1 **Кнопки LCD BRIGHT** (стр. 23)
2 **Кнопка OPEN** (стр. 21)
3 **Кнопки VOLUME** (стр. 33)
4 **Рычаг BATT RELEASE** (стр. 12)
5 **Переключатель POWER** (стр. 21)
6 **Кнопка START/STOP** (стр. 21)
7 **Крючки для плечевого ремня** (стр. 154)
8 **Гнездо DC IN** (стр. 13)

Данный знак означает, что это изделие является подлинной принадлежностью для видеоаппаратуры Sony.
При покупке видеоаппаратуры Sony рекомендуется приобретать для нее принадлежности Sony с таким знаком "GENUINE VIDEO ACCESSORIES".

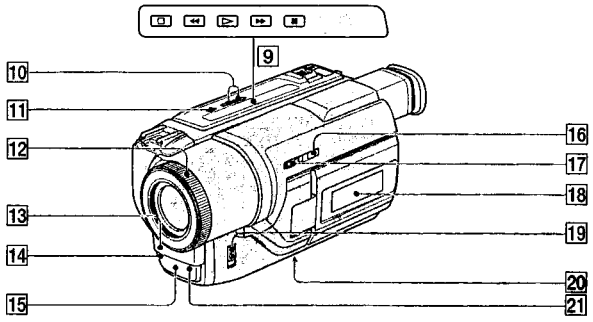

9 **Video control buttons** (p. 33, 36)
■ STOP (stop)
◄◄ REW (rewind)
► PLAY (playback)
►► FF (fastforward)
❚❚ PAUSE (pause)
The control buttons light up when you set the POWER switch to PLAYER.
10 **EDITSEARCH buttons** (p. 31)
11 **S.LASER LINK button** (p. 40)
12 **Focus ring** (p. 57)
13 **Microphone**
14 **Camera recording lamp** (p. 21)
15 **Infrared rays emitter** (p. 28, 40)
16 **SUPER NIGHTSHOT button** (p. 28)
17 **NIGHTSHOT switch** (p. 28)
18 **Display window** (p. 159)
19 **FOCUS switch** (p. 57)
20 **Tripod receptacle** (base)
Make sure that the length of the tripod screw is less than 6.5 mm (9/32 inch). Otherwise, you cannot attach the tripod securely and the screw may damage your camcorder.
21 **Remote sensor** (p. 157)

What is SUPER LASER LINK?
The super laser link system sends and receives pictures and sound between video equipment having the super laser link mark by using infrared rays.

9 **Кнопки видеоконтроля** (стр. 33, 36)
■ STOP (остановка)
◄◄ REW (ускоренная перемотка назад)
► PLAY (воспроизведение)
►► FF (ускоренная перемотка вперед)
❚❚ PAUSE (пауза)
Кнопки контроля высвечиваются при установке переключателя POWER в положение PLAYER.
10 **Кнопка EDITSEARCH** (стр. 31)
11 **Кнопка S.LASER LINK** (стр. 40)
12 **Кольцо фокусировки** (стр. 57)
13 **Микрофон**
14 **Лампа записи видеокамеры** (стр. 21)
15 **Излучатель инфракрасных лучей** (стр. 28, 40)
16 **Кнопка SUPER NIGHTSHOT** (стр. 28)
17 **Переключатель NIGHTSHOT** (стр. 28)
18 **Окошко дисплея** (стр. 159)
19 **Переключатель FOCUS** (стр. 57)
20 **Гнездо для треноги** (основание)
Убедитесь, что длина винта треноги менее 6,5 мм. В противном случае Вы не сможете надежно прикрепить треногу, а винт может повредить Вашу видеокамеру.
21 **Датчик дистанционного управления** (стр. 157)

Что такое SUPER LASER LINK?
Система лазерного суперканала передачи сигналов посылает и принимает сигналы изображения и звука между видеоаппаратурой, имеющей знак лазерного суперканала передачи сигналов, с помощью инфракрасных лучей.

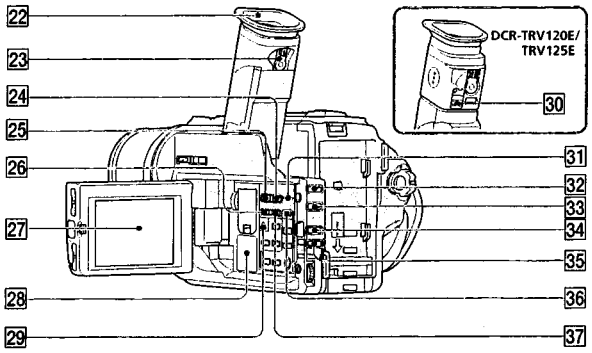

22 **Eyecup**
23 **Viewfinder lens adjustment lever** (p. 25)
24 **MEMORY INDEX button*** (p. 111)
25 **MEMORY PLAY button*** (p. 109)
26 **MEMORY – button*** (p. 102, 109)
27 **LCD screen** (p. 23)
28 **Speaker**
29 **(self-timer) button*** (p. 30)
30 **Eyecup RELEASE knob**** (p. 146)
31 **MEMORY DELETE button*** (p. 118)
32 **FADER button** (p. 47)
33 **BACK LIGHT button** (p. 27)
34 **PROGRAM AE button** (p. 55)
35 **EXPOSURE button** (p. 56)
36 **MEMORY MIX button*** (p. 102)
37 **MEMORY + button*** (p. 102, 109)
* DCR-TRV320E only
** DCR-TRV120E/TRV125E

Attaching the shoulder strap
Attach the shoulder strap supplied with your camcorder to the hooks for the shoulder strap.

22 **Окуляр**
23 **Рычаг регулировки объектива видоискателя** (стр. 25)
24 **Кнопка MEMORY INDEX*** (стр. 111)
25 **Кнопка MEMORY PLAY*** (стр. 109)
26 **Кнопка MEMORY –*** (стр. 102, 109)
27 **Экран ЖКД** (стр. 23)
28 **Динамик**
29 **Кнопка (таймера самозапуска)*** (стр. 30)
30 **Кнопка освобождения окуляра RELEASE**** (стр. 146)
31 **Кнопка MEMORY DELETE*** (стр. 118)
32 **Кнопка FADER** (стр. 47)
33 **Кнопка BACK LIGHT** (стр. 27)
34 **Кнопка PROGRAM AE** (стр. 55)
35 **Кнопка EXPOSURE** (стр. 56)
36 **Кнопка MEMORY MIX*** (стр. 102)
37 **Кнопка MEMORY +*** (стр. 102, 109)
* Только DCR-TRV320E
** DCR-TRV120E/TRV125E

Прикрепление плечевого ремня
Прикрепите плечевой ремень, прилагаемый к Вашей видеокамере, к крючкам для плечевого ремня.

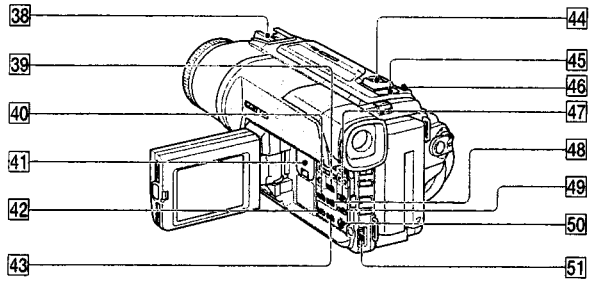

38 **Intelligent accessory shoe**
39 **DATA CODE button** (p. 35)
40 **DISPLAY button** (p. 34)
41 **Lithium battery compartment** (p. 126)
42 **PB ZOOM button** (p. 66)
43 **TITLE button** (p. 59)
44 **Power Zoom lever** (p. 24)
45 **"Memory Stick" lamp***
This lamp lights up while "Memory Stick" is in the "Memory Stick" compartment.
46 **PHOTO button** (p. 41)
47 **DIGITAL EFFECT button** (p. 52, 65)
48 **END SEARCH button** (p. 31)
49 **PICTURE EFFECT button** (p. 50, 64)
50 **MENU button** (p. 45, 76)
51 **SEL/PUSH EXEC dial** (p. 45, 76)
* DCR-TRV320E only

Intelligent Accessory Shoe

Notes on the intelligent accessory shoe
- The intelligent accessory shoe supplies power to optional accessories such as a video light or microphone.
- The intelligent accessory shoe is linked to the POWER switch, allowing you to turn the power supplied by the shoe on and off. Refer to the operating instructions of the accessory for further information.
- The intelligent accessory shoe has a safety device for fixing the installed accessory securely. To connect an accessory, press down and push it to the end, and then tighten the screw.
- To remove an accessory, loosen the screw, and then press down and pull out the accessory.

38 **Держатель для установки принадлежностей**
39 **Кнопка DATA CODE** (стр. 35)
40 **Кнопка DISPLAY** (стр. 34)
41 **Отсек литиевой батарейки** (стр. 126)
42 **Кнопка PB ZOOM** (стр. 66)
43 **Кнопка TITLE** (стр. 59)
44 **Рычаг приводного вариообъектива** (стр. 24)
45 **Лампочка "Memory Stick"***
Эта лампочка высвечивается в то время, когда "Memory Stick" вставлена в отсек "Memory Stick".
46 **Кнопка PHOTO** (стр. 41)
47 **Кнопка DIGITAL EFFECT** (стр. 52, 65)
48 **Кнопка END SEARCH** (стр. 31)
49 **Кнопка PICTURE EFFECT** (стр. 50, 64)
50 **Кнопка MENU** (стр. 45, 76)
51 **Диск SEL/PUSH EXEC** (стр. 45, 76)
* Только DCR-TRV320E

Intelligent Accessory Shoe

Примечания относительно держателя для установки принадлежностей
- Держатель для установки принадлежностей подает питание на вспомогательные принадлежности, такие как видеоподсветка или микрофон.
- Держатель для установки принадлежностей связан с переключателем POWER, позволяя Вам включать и выключать подаваемое через держатель питание. Подробные сведения приведены в инструкции по эксплуатации вспомогательных принадлежностей.
- В держателе для установки вспомогательных принадлежностей имеется предохранительное устройство для надежной фиксации установленной принадлежности. Для подсоединения принадлежности нажмите ее вниз и нажмите до упора, а затем затяните винт.
- Для снятия принадлежности ослабьте винт, а затем нажмите принадлежность вниз и потяните ее.

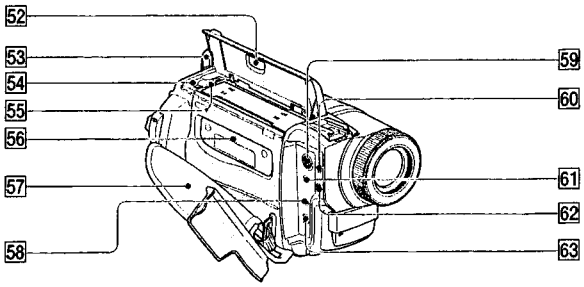

52 **EJECT button** (p. 19)
53 **Viewfinder** (p. 25)
54 **Access lamp*** (p. 93)
55 **"Memory Stick" compartment*** (p. 93)
56 **Cassette compartment** (p. 19)
57 **Grip strap**
58 **LANC control jack** (DCR-TRV120E/TRV125E)
LANC /DIGITAL I/O jack (DCR-TRV320E)
LANC stands for Local Application Control Bus System. The LANC control jack is used for controlling the tape transport of video equipment and other peripherals connected to the video equipment. This jack has the same function as the jack indicated as CONTROL L or REMOTE.
59 **S VIDEO jack** (p. 44, 72)
60 **(headphones) jack**
61 **AUDIO/VIDEO out jack** (p. 44, 72)
62 **MIC jack (PLUG IN POWER)**
Connect an external microphone (not supplied). This jack also accepts a "plug-in-power" microphone.
63 **DV OUT jack** (p. 74)
The DV OUT jack is i.LINK compatible.
* DCR-TRV320E only

52 **Кнопка EJECT** (стр. 19)
53 **Видоискатель** (стр. 25)
54 **Лампочка доступа*** (стр. 93)
55 **Отсек "Memory Stick"*** (стр. 93)
56 **Кассетный отсек** (стр. 19)
57 **Ремень для захвата**
58 **Гнездо управления LANC**
(DCR-TRV120E/TRV125E)
Гнездо управления LANC /DIGITAL I/O
(DCR-TRV320E)
LANC означает систему канала местного управления. Гнездо управления LANC используется для контроля за перемещением ленты видеоаппаратуры и периферийных устройств, подключенных к ней. Данное гнездо имеет такую же функцию, как и разъемы, обозначенные как CONTROL L или REMOTE.
59 **Гнездо S VIDEO** (стр. 44, 72)
60 **Гнездо (головные телефоны)**
61 **Выходное гнездо AUDIO/VIDEO** (стр. 44, 72)
62 **Гнездо MIC (PLUG IN POWER)**
Для подсоединения внешнего микрофона (не прилагается). Это гнездо также позволяет подключить микрофон "с выключателем питания".
63 **Гнездо DV OUT** (стр. 74)
Гнездо DV OUT совместимо с каналом передачи сигналов i.LINK.
* Только DCR-TRV320E

Fastening the grip strap

Пристегивание ремня для захвата

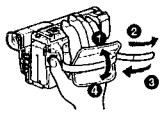

Fasten the grip strap firmly.

Пристегните ремень для захвата плотно.

Remote Commander

The buttons that have the same name on the Remote Commander as on your camcorder function identically to the buttons on your camcorder.

Пульт дистанционного управления

Кнопки пульта дистанционного управления, которые имеют одинаковые наименования с кнопками на видеокамере, функционируют идентично.

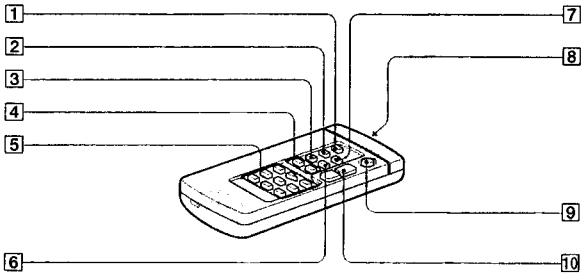

1 **PHOTO button** (p. 41)
2 **DISPLAY button** (p. 34)
3 **SEARCH MODE button** (p. 68, 70, 71)
4 **/ buttons** (p. 68, 70, 71)
5 **Tape transport buttons** (p. 36)
6 **DATA CODE button** (p. 35)
7 **ZERO SET MEMORY button** (p. 63, 67)
8 **Transmitter**
Point toward the remote sensor to control the camcorder after turning on the camcorder.
9 **START/STOP button** (p. 21)
10 **Power zoom button** (p. 24)

1 **Кнопка PHOTO** (стр. 41)
2 **Кнопка DISPLAY** (стр. 34)
3 **Кнопка SEARCH MODE** (стр. 68, 70, 71)
4 **Кнопки /** (стр. 68, 70, 71)
5 **Кнопки перемещения ленты** (стр. 36)
6 **Кнопка DATA CODE** (стр. 35)
7 **Кнопка ZERO SET MEMORY** (стр. 63, 67)
8 **Передатчик**
Направьте на датчик для управления видеокамерой после включения видеокамеры.
9 **Кнопка START/STOP** (p. 21)
10 **Кнопка приводного вариообъектива** (стр. 24)

To prepare the Remote Commander
Insert 2 size R6 (AA) batteries by matching the + and – polarities on the batteries to the + – marks inside the battery compartment.

Для подготовки пульта дистанционного управления
Вставьте 2 батарейки R6 (размера AA), соблюдая надлежащую полярность + и – на батарейках со знаками + – внутри отсека для батареек.

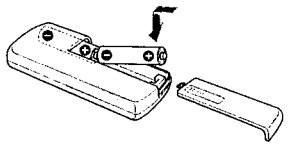

Notes on the Remote Commander
- Point the remote sensor away from strong light sources such as direct sunlight or overhead lighting. Otherwise, the Remote Commander may not function properly.
- Your camcorder works in the Commander mode VTR 2. Commander modes 1, 2 and 3 are used to distinguish your camcorder from other Sony VCRs to avoid remote control misoperation. If you use another Sony VCR in the Commander mode VTR 2, we recommend changing the Commander mode or covering the sensor of the VCR with black paper.

Примечания к пульту дистанционного управления
- Держите дистанционный датчик подальше от сильных источников света, как например, прямые солнечные лучи или иллюминация. В противном случае дистанционное управление может не действовать.
- Данная видеокамера работает в режиме пульта дистанционного управления VTR 2. Режимы пульта дистанционного управления 1, 2 и 3 используются для отличия данной видеокамеры от других КВМ фирмы Sony во избежание неправильной работы дистанционного управления. Если Вы используете другой КВМ фирмы Sony, работающий в режиме VTR 2, мы рекомендуем Вам изменить режим пульта дистанционного управления или закрыть дистанционный датчик КВМ черной бумагой.

Operation indicators

LCD screen and Viewfinder/
Экран ЖКД и Видоискатель

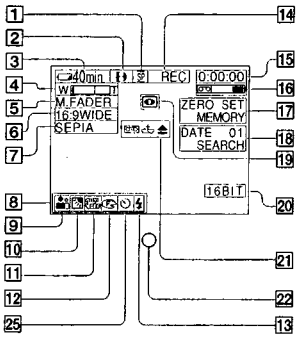

Рабочие индикаторы

Display window/Окошко дисплея

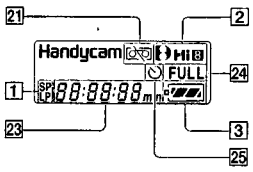

1 **Recording mode indicator/Mirror mode indicator** (p. 23)
2 **Format indicator** (p. 123)
, HI8 or 8 indicator appears.
3 **Remaining battery time indicator** (p. 13, 26)
4 **Exposure indicator** (p. 56)/**Zoom indicator** (p. 24)
5 **Fader indicator** (p. 47)/**Digital effect indicator** (p. 52, 65)
6 **Wide mode indicator** (p. 45)
7 **Picture effect indicator** (p. 50, 64)
8 **LCD bright indicator** (p. 23)/**Volume indicator** (p. 33)/**Data code indicator** (p. 35)
9 **PROGRAM AE indicator** (p. 55)
10 **Backlight indicator** (p. 27)
11 **SteadyShot off indicator** (p. 77)
12 **Manual focusing indicator** (p. 57)
13 **Video flash ready indicator**
This indicator appears when you use the video flash light (not supplied).

1 **Индикатор режима записи/индикатор зеркального режима** (стр. 23)
2 **Индикатор формата** (стр. 123)
Появится индикатор , HI8 или 8.
3 **Индикатор времени оставшегося заряда батарейного блока** (стр. 13, 26)
4 **Индикатор экспозиции** (стр. 56)/**индикатор вариообъектива** (стр. 24)
5 **Индикатор фейдера** (стр. 47)/**индикатор цифрового эффекта** (стр. 52, 65)
6 **Индикатор широкоформатного режима** (стр. 45)
7 **Индикатор эффекта изображения** (стр. 50, 64)
8 **Индикатор яркости ЖКД** (стр. 23)/**индикатор громкости** (стр. 33)/**индикатор кода данных** (стр. 35)
9 **Индикатор PROGRAM AE** (стр. 55)
10 **Индикатор задней подсветки** (стр. 27)
11 **Индикатор выключенной функции устойчивой съемки** (стр. 83)
12 **Индикатор ручной фокусировки** (стр. 57)
13 **Индикатор готовности видеовспышки**
Этот индикатор появляется, когда Вы используете видеовспышку (не прилагается).

Identifying the parts and controls

14 **STBY/REC indicator** (p. 21)**/Video control mode** (p. 36)

15 **Tape counter** (p. 26, 63, 67)**/Time code indicator** (p. 26)**/Self-diagnosis display indicator** (p. 132)**/Tape photo recording indicator** (p. 41)

16 **Remaining tape indicator** (p. 26)

17 **ZERO SET MEMORY indicator** (p. 63, 67)

18 **Search mode indicator** (p. 31, 68, 70, 71)

19 **NIGHTSHOT indicator** (p. 28)

20 **Audio mode indicator** (p. 80)

21 **Warning indicators** (p. 133)

22 **Recording lamp** (p. 21)
This indicator appears in the viewfinder.

23 **Tape counter** (p. 26, 63, 67)**/Time code indicator** (p. 26)**/Self-diagnosis display indicator** (p. 132)**/Remaining battery time indicator** (p. 13, 26)

24 **FULL charge indicator** (p. 13)

25 **Self-timer indicator*** (p. 30)

***DCR-TRV320E only**

Обозначение частей и регуляторов

14 **Индикатор STBY/REC** (стр. 21)**/режим видеоконтроля** (стр. 36)

15 **Индикатор счетчика ленты** (стр. 26, 63, 67)**/индикатор кода времени** (стр. 26)**/индикатор функции самодиагностики** (стр. 140)**/индикатор фотосъемки на ленту** (стр. 41)

16 **Индикатор оставшейся ленты** (стр. 26)

17 **Индикатор ZERO SET MEMORY** (стр. 63, 67)

18 **Индикатор режима поиска** (стр. 31, 68, 70, 71)

19 **Индикатор NIGHTSHOT** (стр. 28)

20 **Индикатор аудиорежима** (стр. 86)

21 **Предупреждающие индикаторы** (стр. 141)

22 **Лампочка записи** (стр. 21)
В видоискателе появится индикатор.

23 **Индикатор счетчика ленты** (стр. 26, 63, 67)**/индикатор кода времени** (стр. 26)**/индикатор функции самодиагностики** (стр. 140)**/индикатор времени оставшегося заряда батарейного блока** (стр. 13, 26)

24 **Индикатор зарядки FULL** (стр. 13)

25 **Индикатор таймера самозапуска*** (стр. 30)

***Только DCR-TRV320E**

SECTION 2
DISASSEMBLY

- This set can be disassembled in the order shown below.

Note: TRV model : DCR-TRV120/TRV120E/TRV120P/TRV125E
TR model : DCR-TR8000E/TR8100E

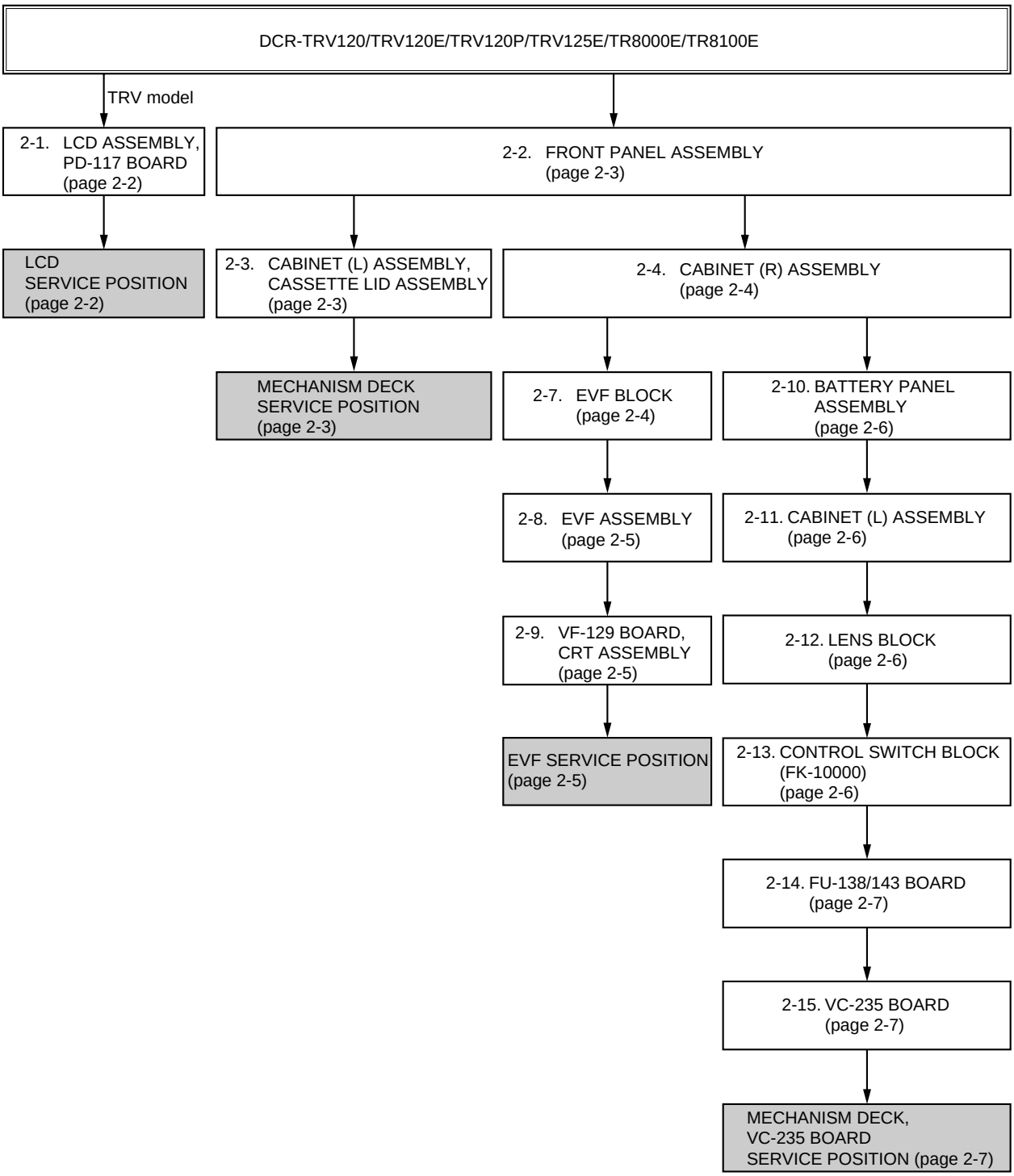

Note: Follow the disassembly procedure in the numerical order given.

2-1. LCD ASSEMBLY, PD-117 BOARD (TRV model)

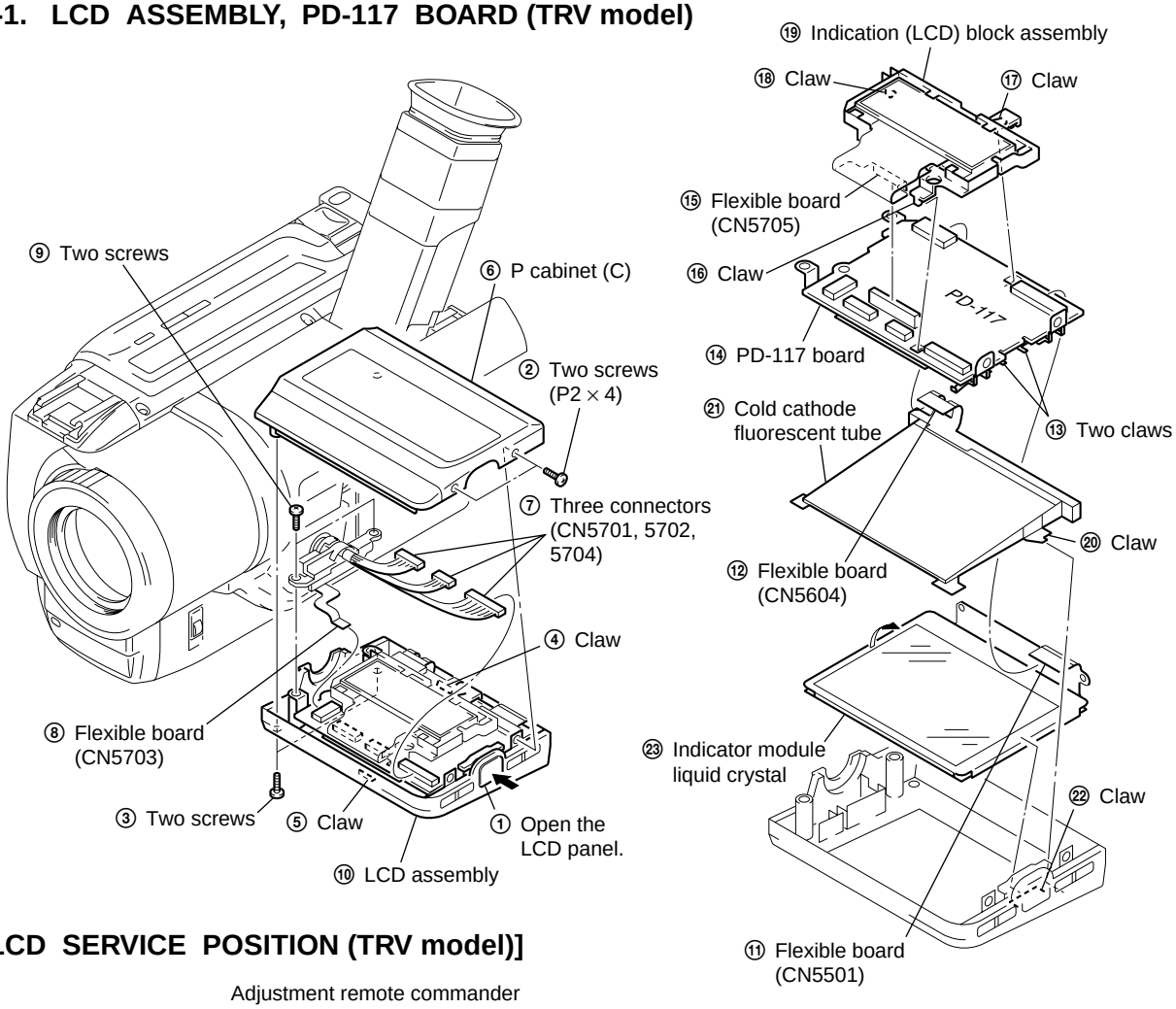

[LCD SERVICE POSITION (TRV model)]

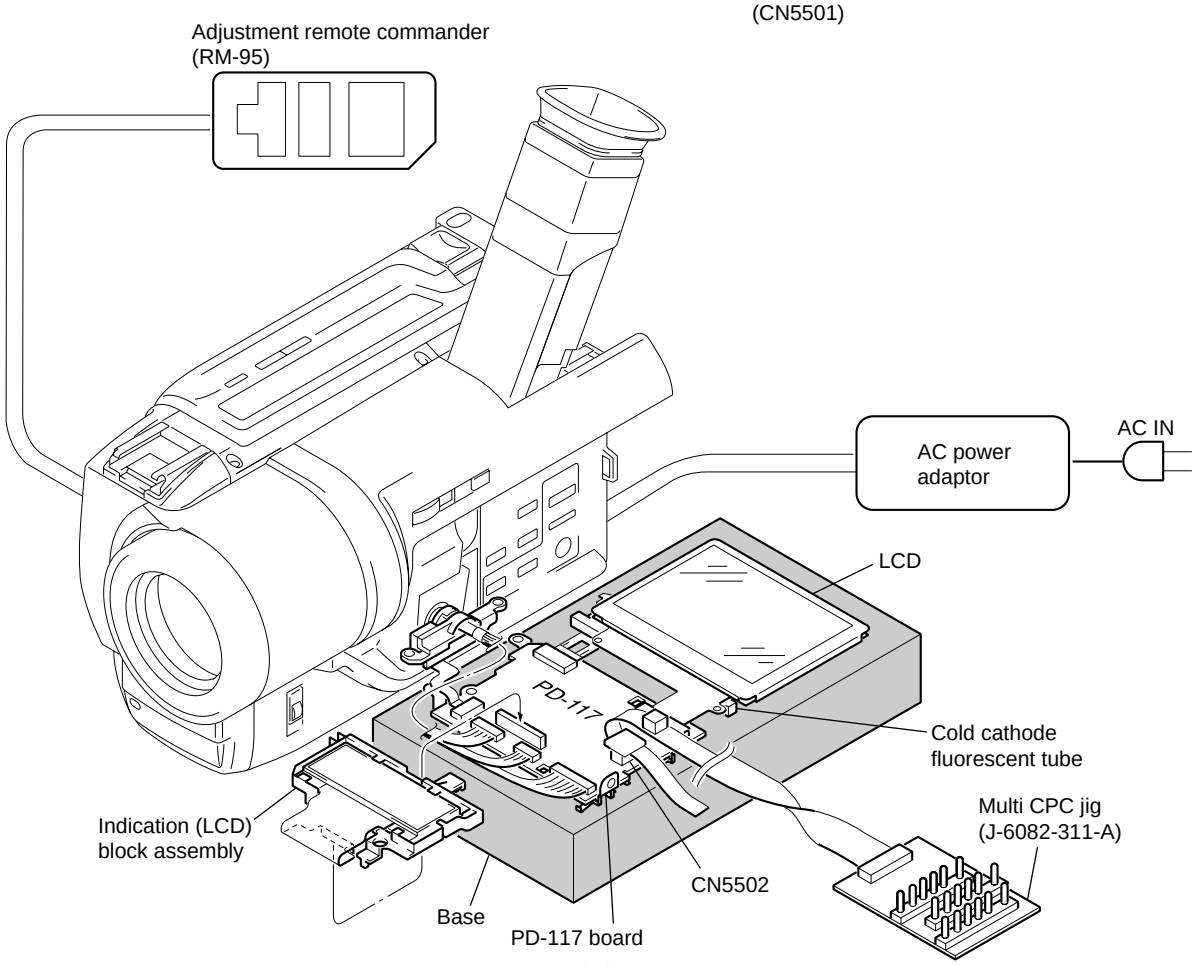

2-2. FRONT PANEL ASSEMBLY

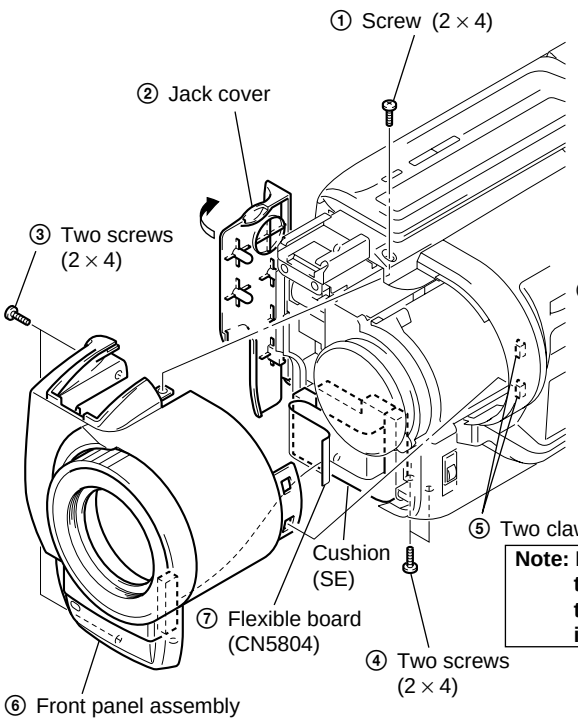

2-3. CABINET (L) ASSEMBLY, CASSETTE LID ASSEMBLY

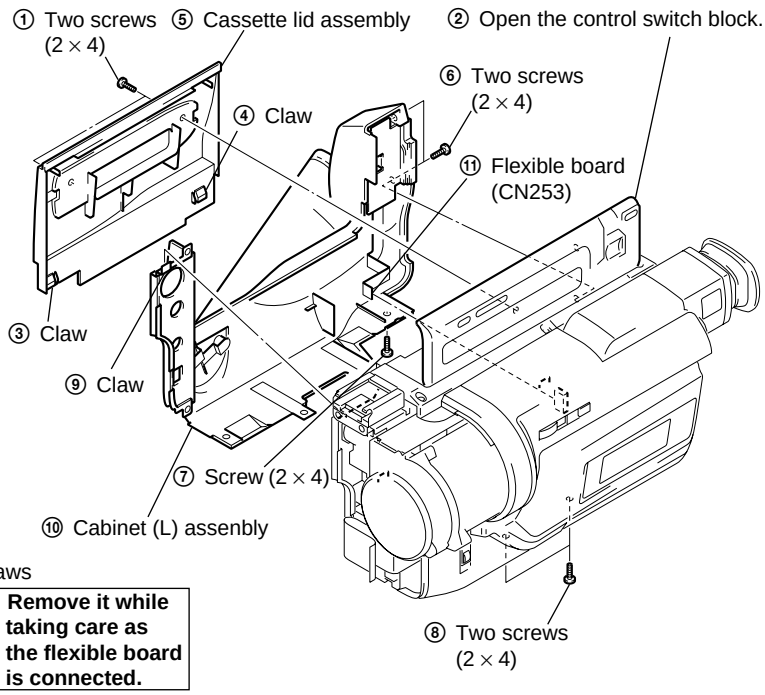

Note: Remove it while taking care as the flexible board is connected.

[MECHANISM DECK SERVICE POSITION]

- **How to move up the cassette compartment manually**

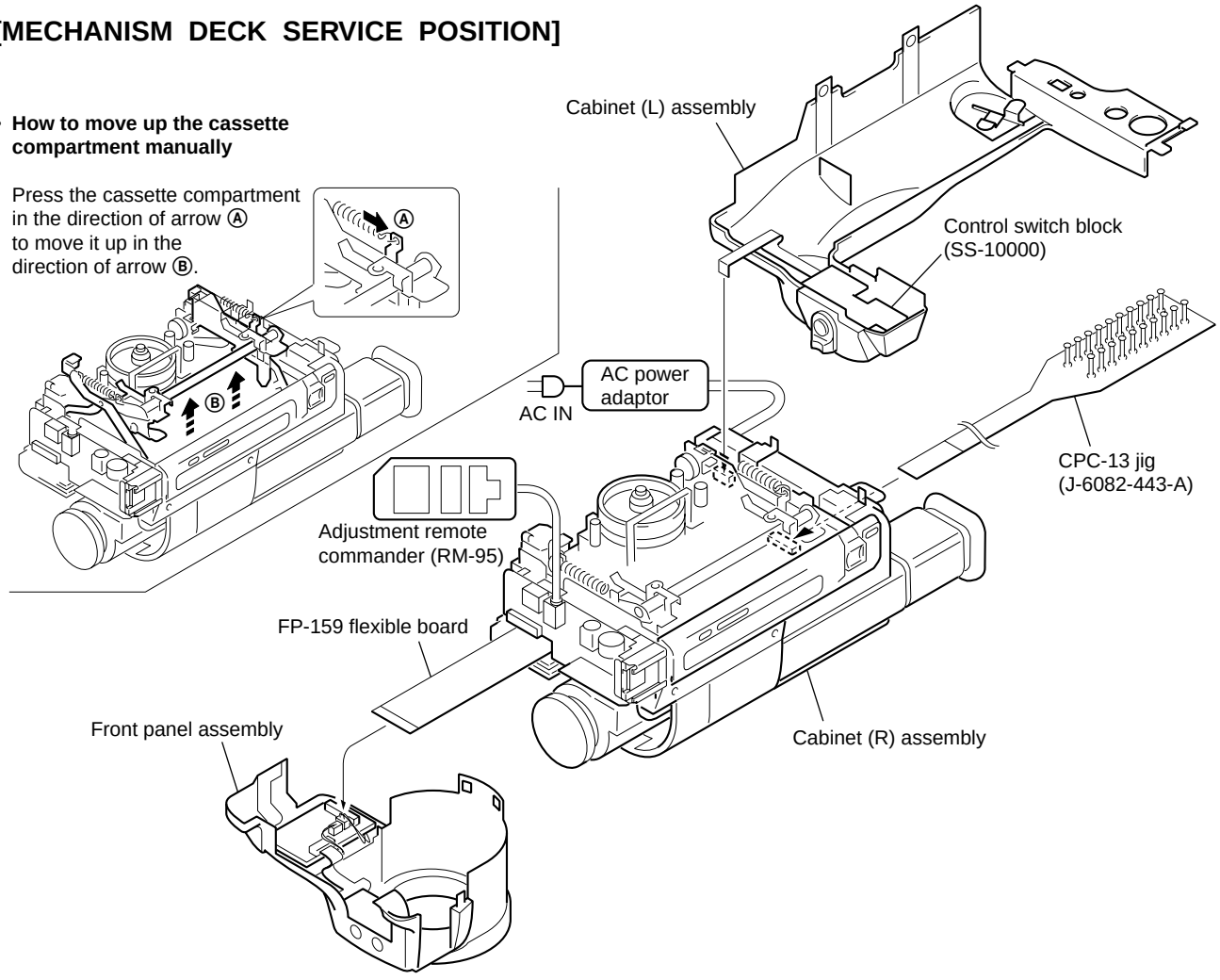

2-4. CABINET (R) ASSEMBLY

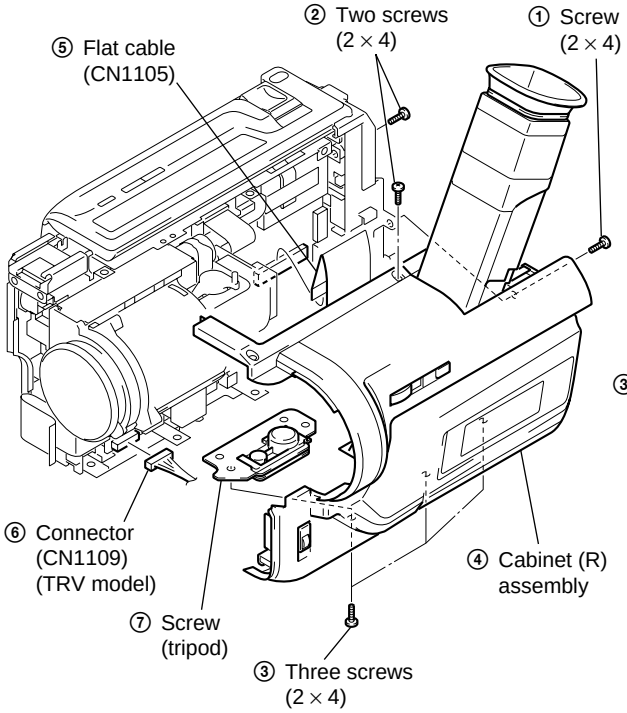

2-5. CF-69 BOARD (TRV model)

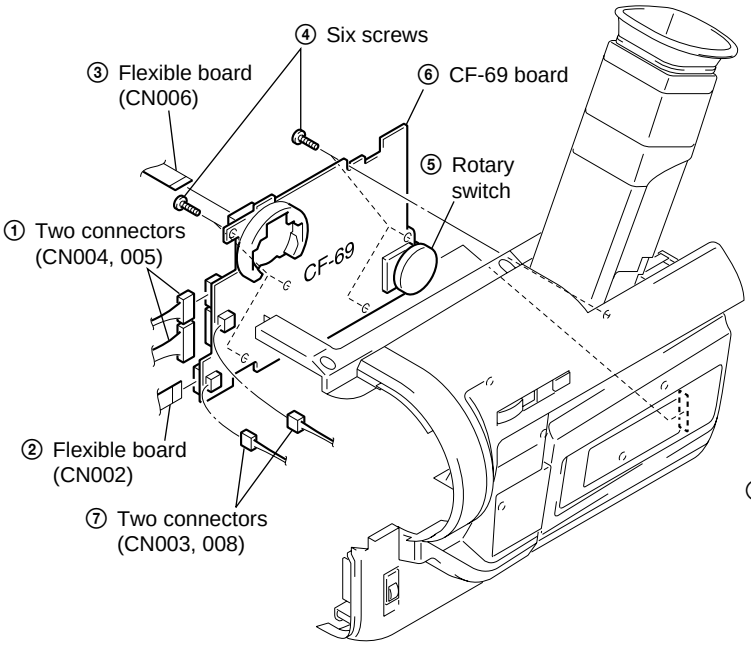

2-6. CF-71 BOARD (TR model)

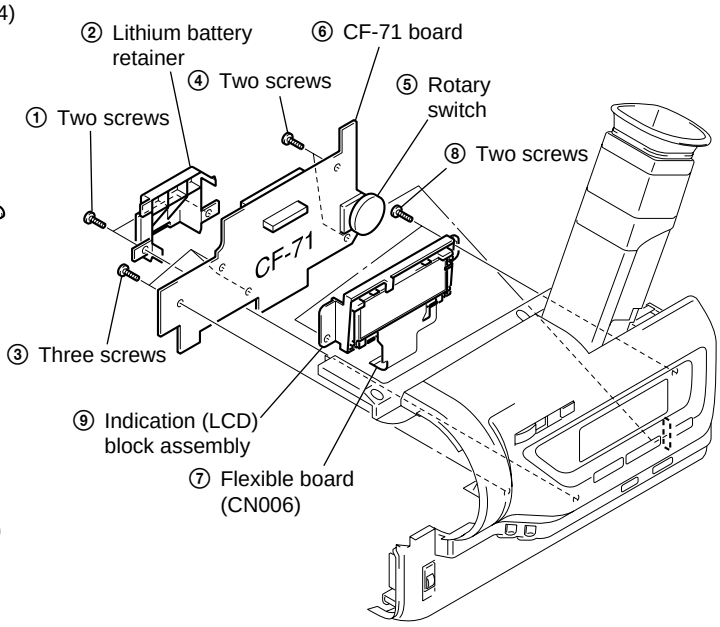

2-7. EVF BLOCK

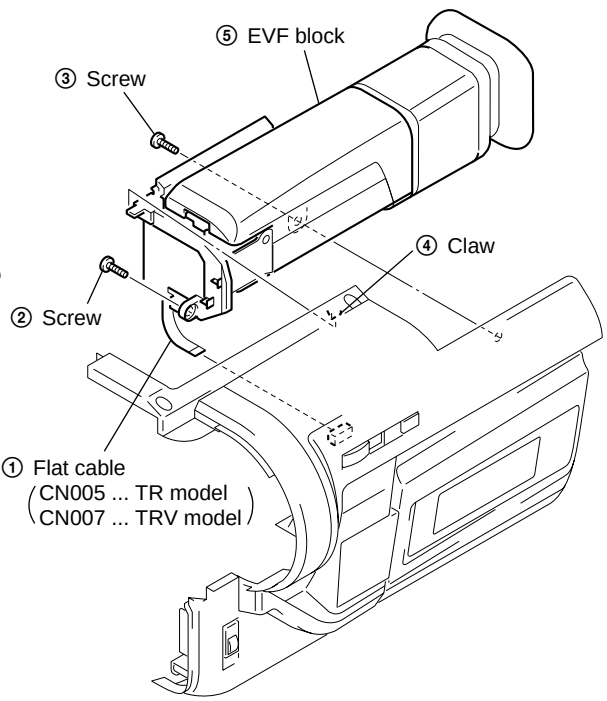

2-8. EVF ASSEMBLY

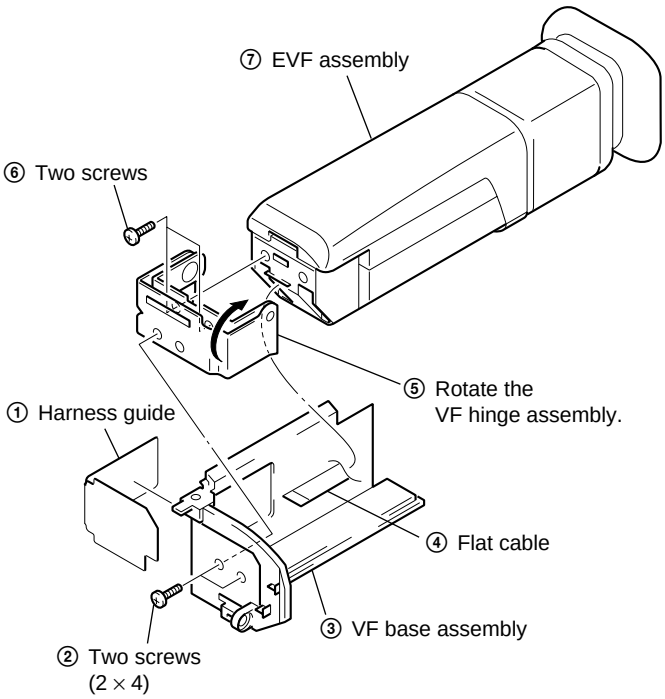

2-9. VF-129 BOARD, CRT ASSEMBLY

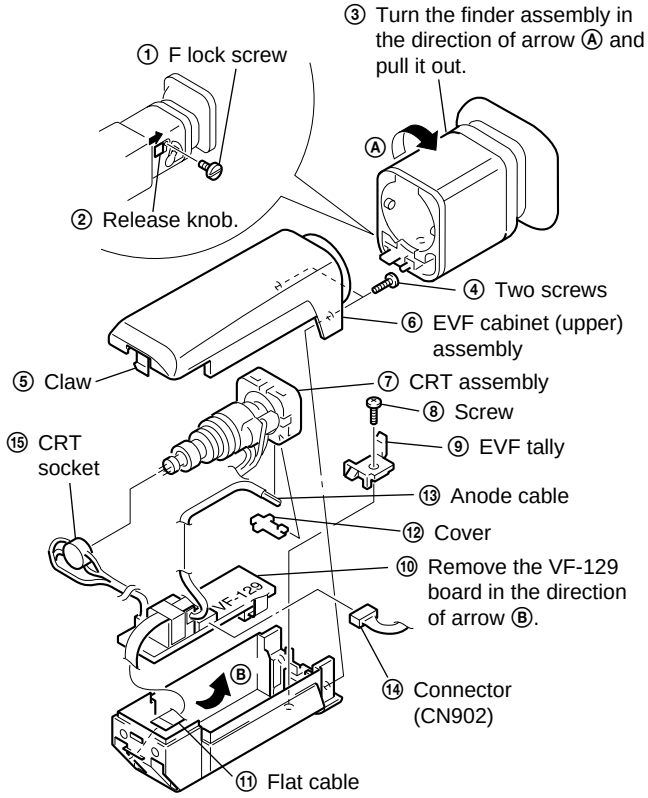

[EVF SERVICE POSITION]

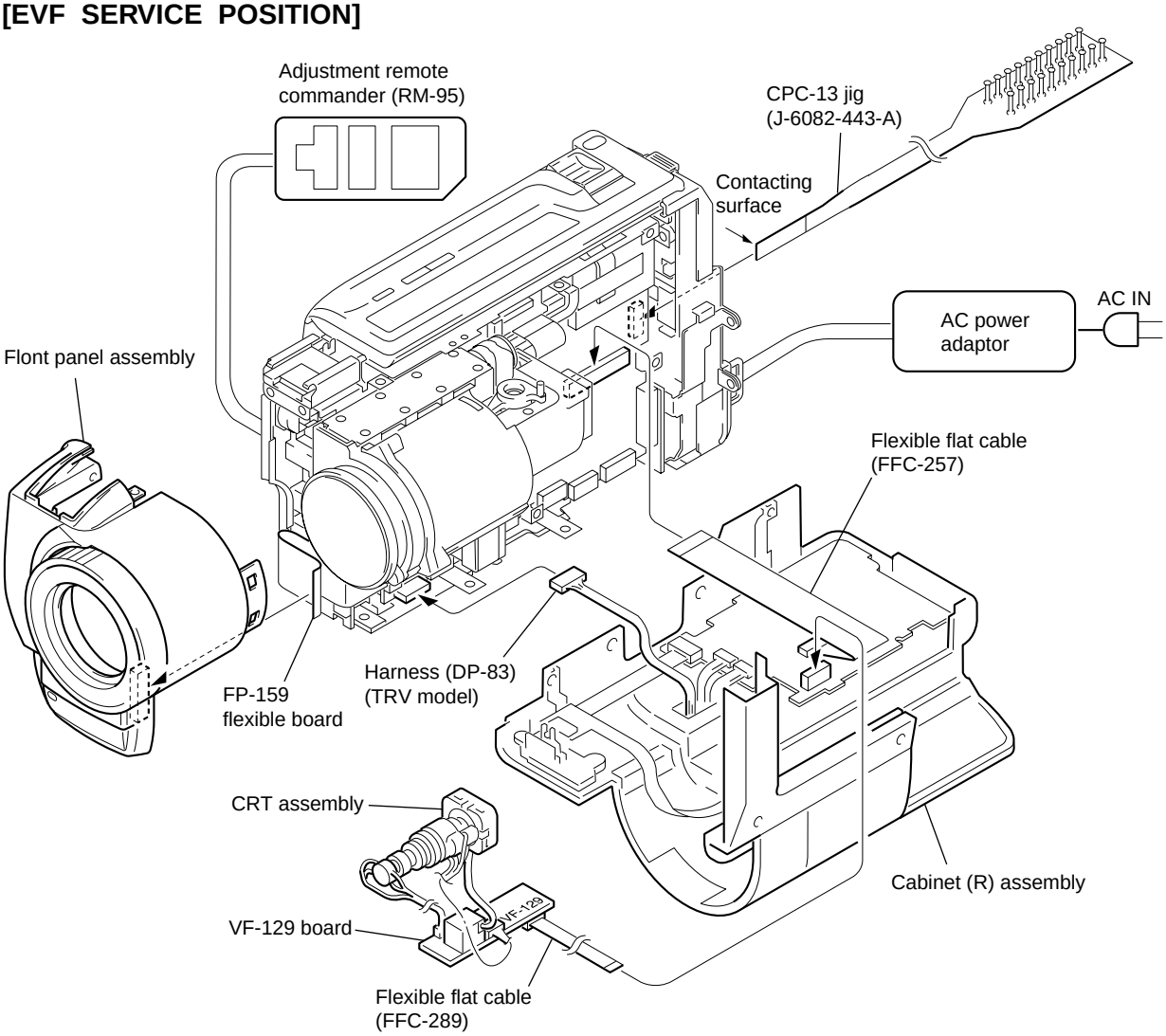

2-10. BATTERY PANEL ASSEMBLY

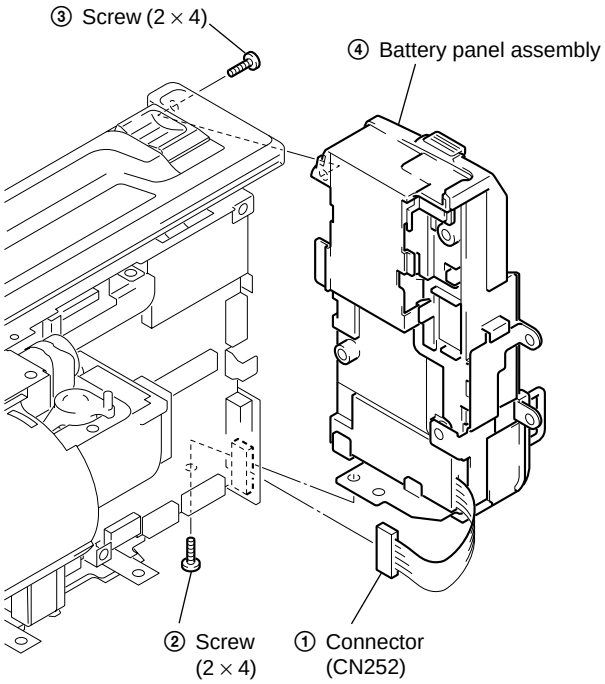

2-11. CABINET (L) ASSEMBLY

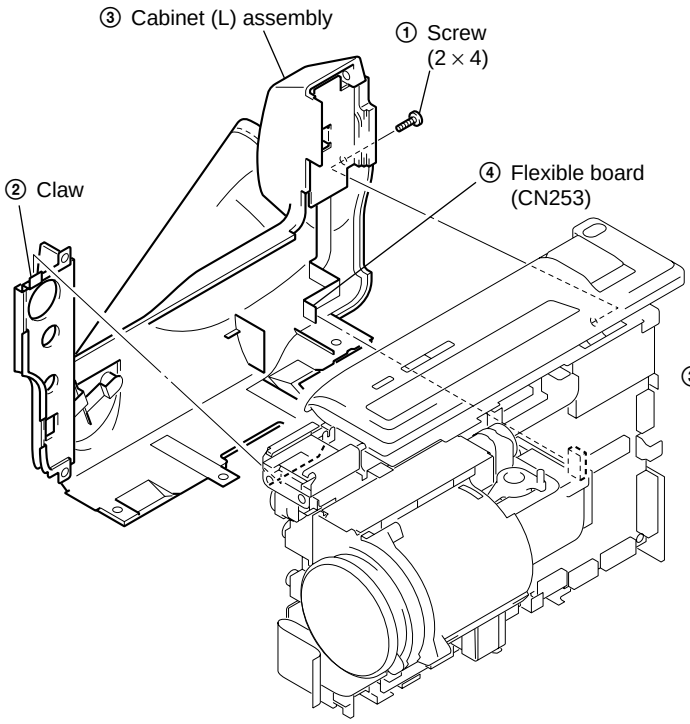

2-12. LENS BLOCK

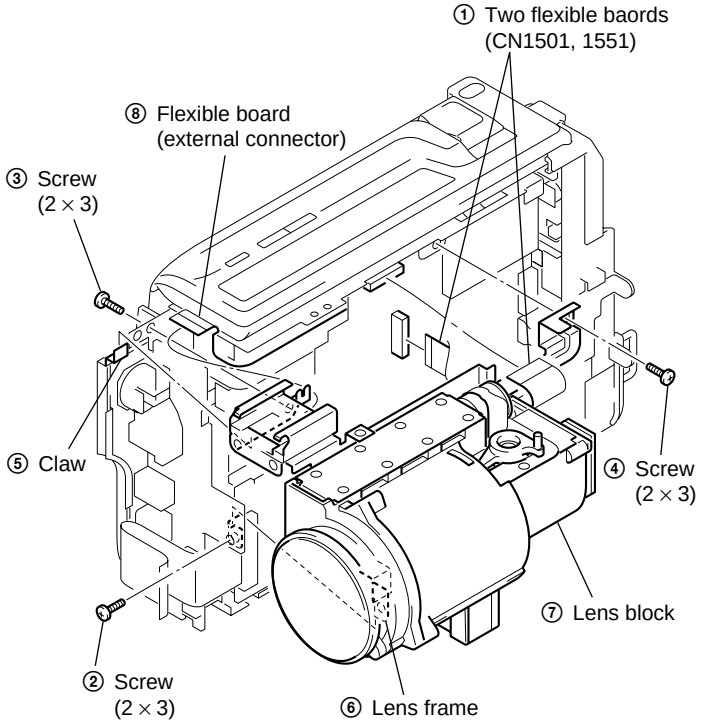

2-13. CONTROL SWITCH BLOCK (FK-10000)

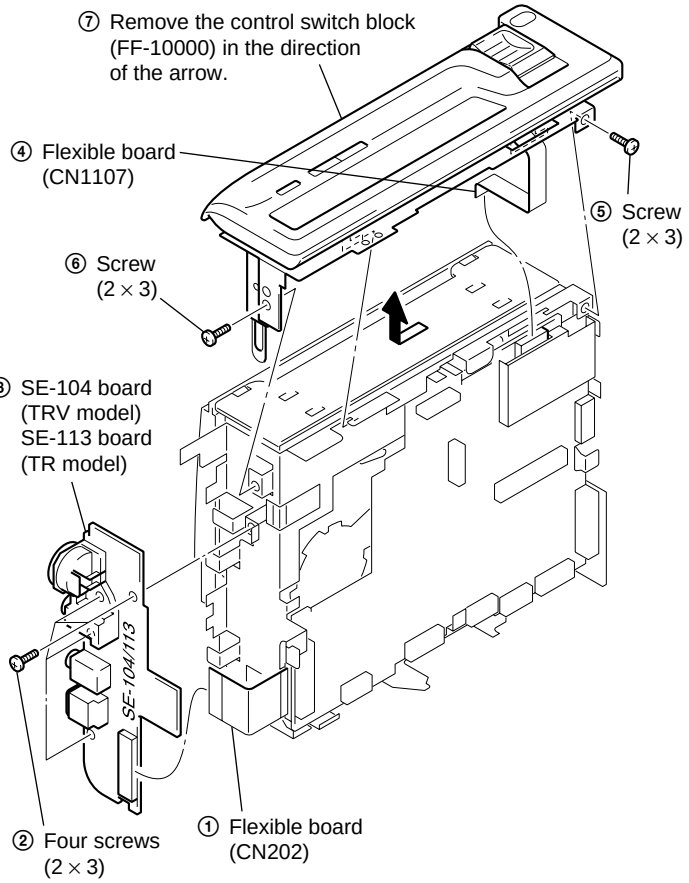

2-14. FU-138/143 BOARD

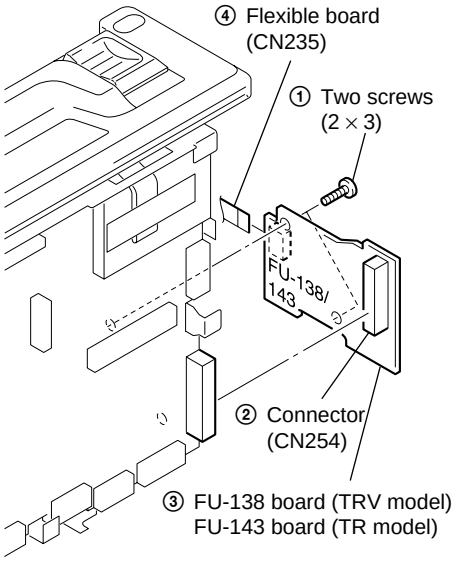

2-15. VC-235 BOARD

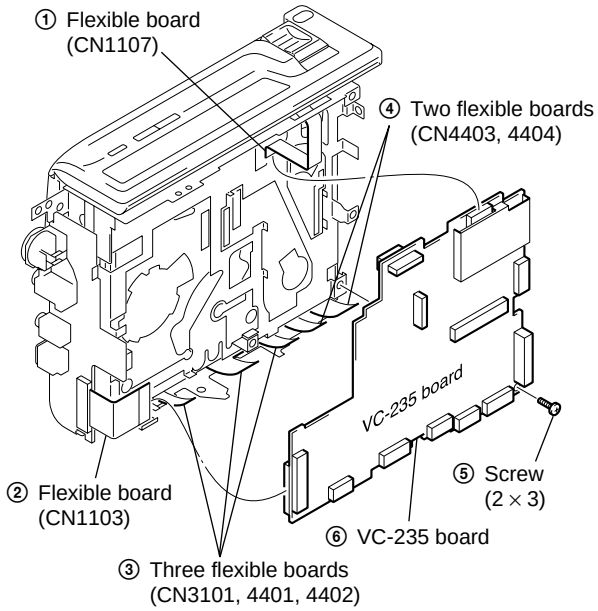

[MECHANISM DECK, VC-235 BOARD SERVICE POSITION]

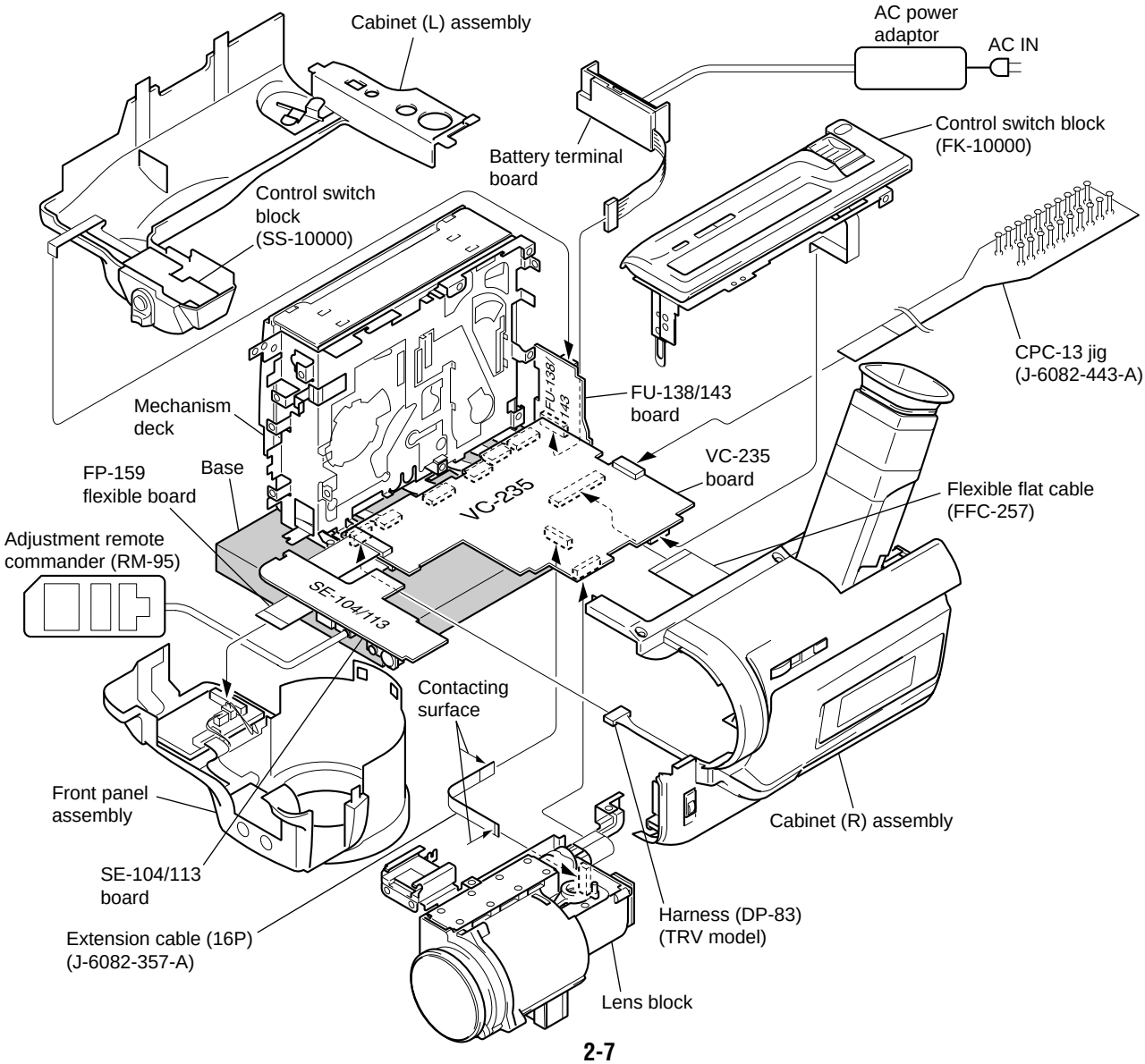

2-16. CIRCUIT BOARDS LOCATION

– TRV model –

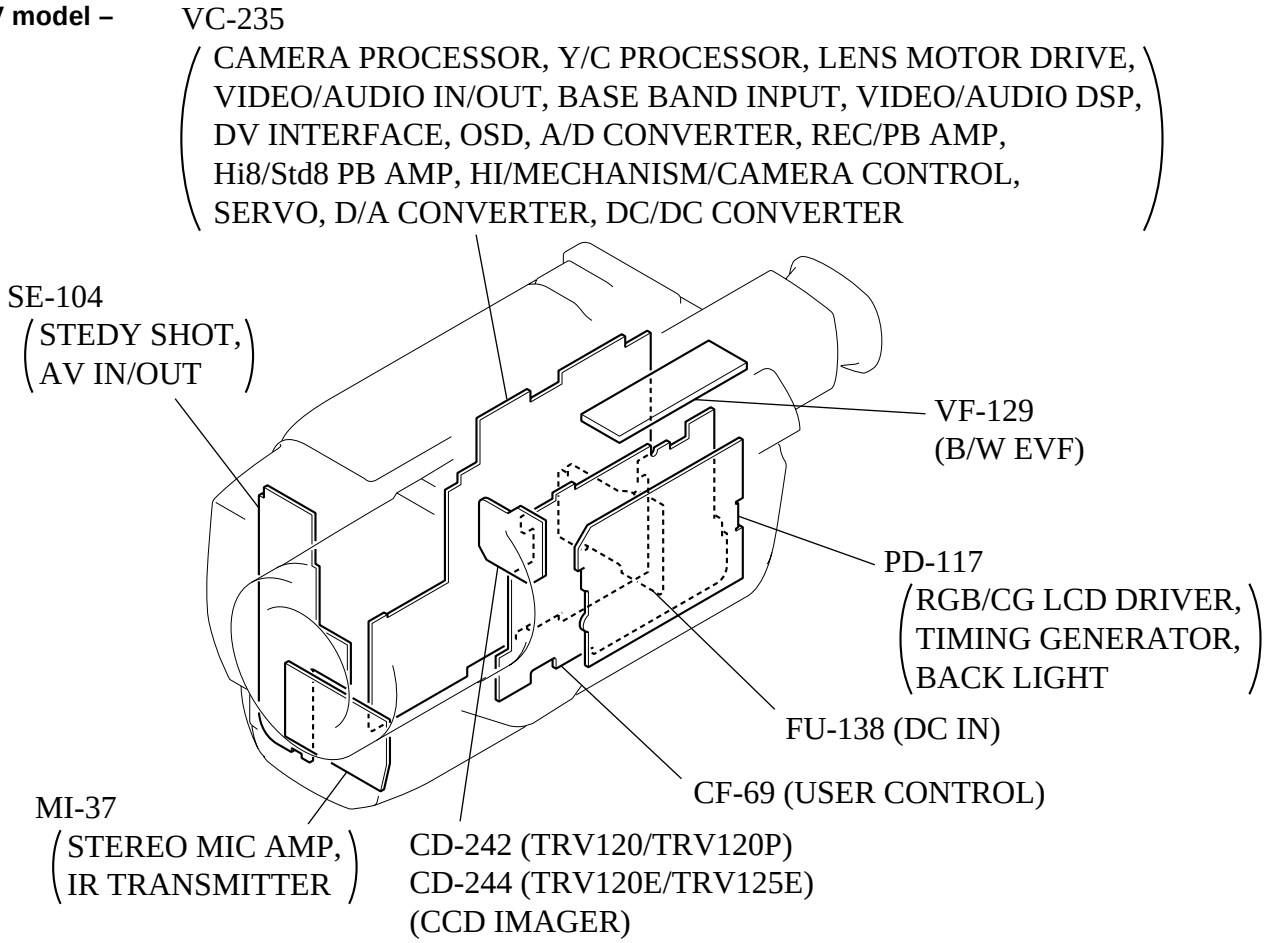

– TR model –

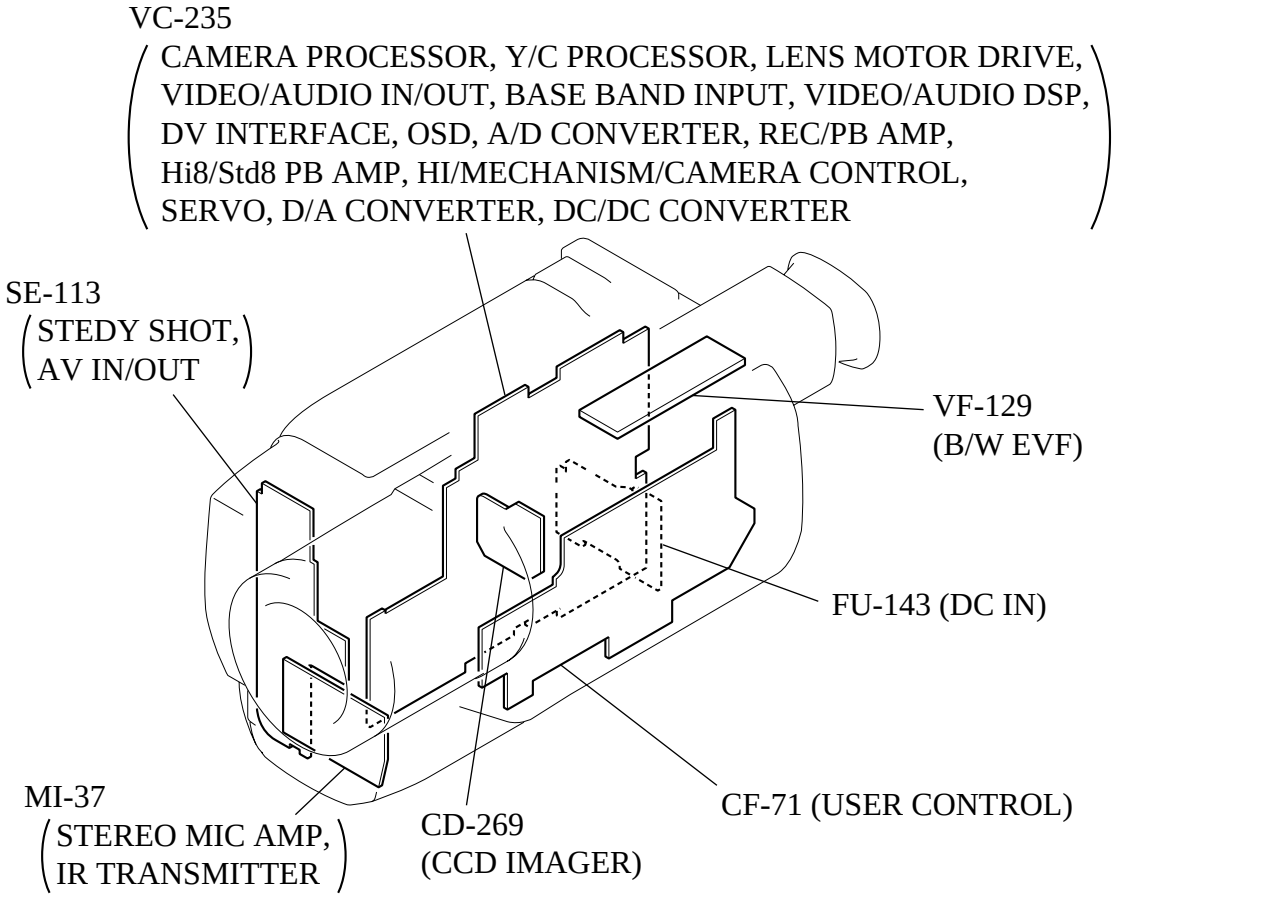

2-17. FLEXIBLE BOARDS LOCATION

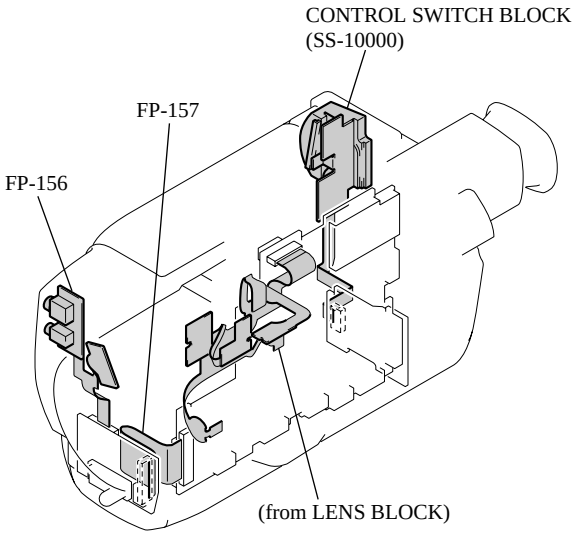

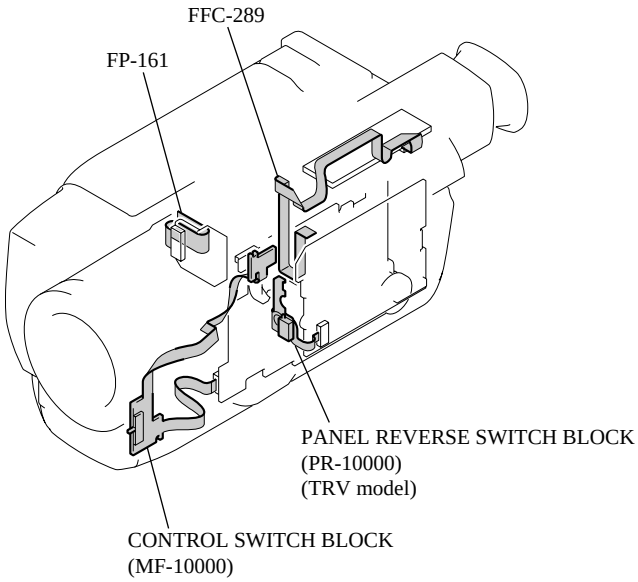

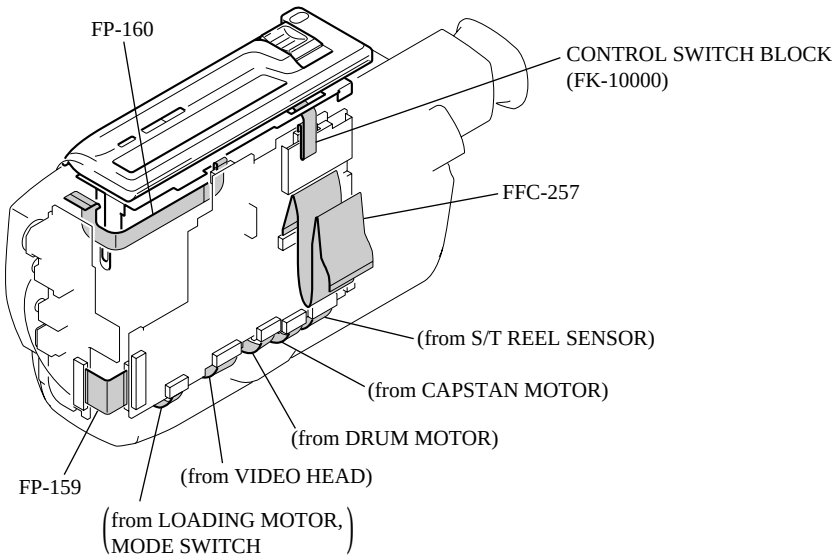

SECTION 3
BLOCK DIAGRAMS

3-1. OVERALL BLOCK DIAGRAM 1

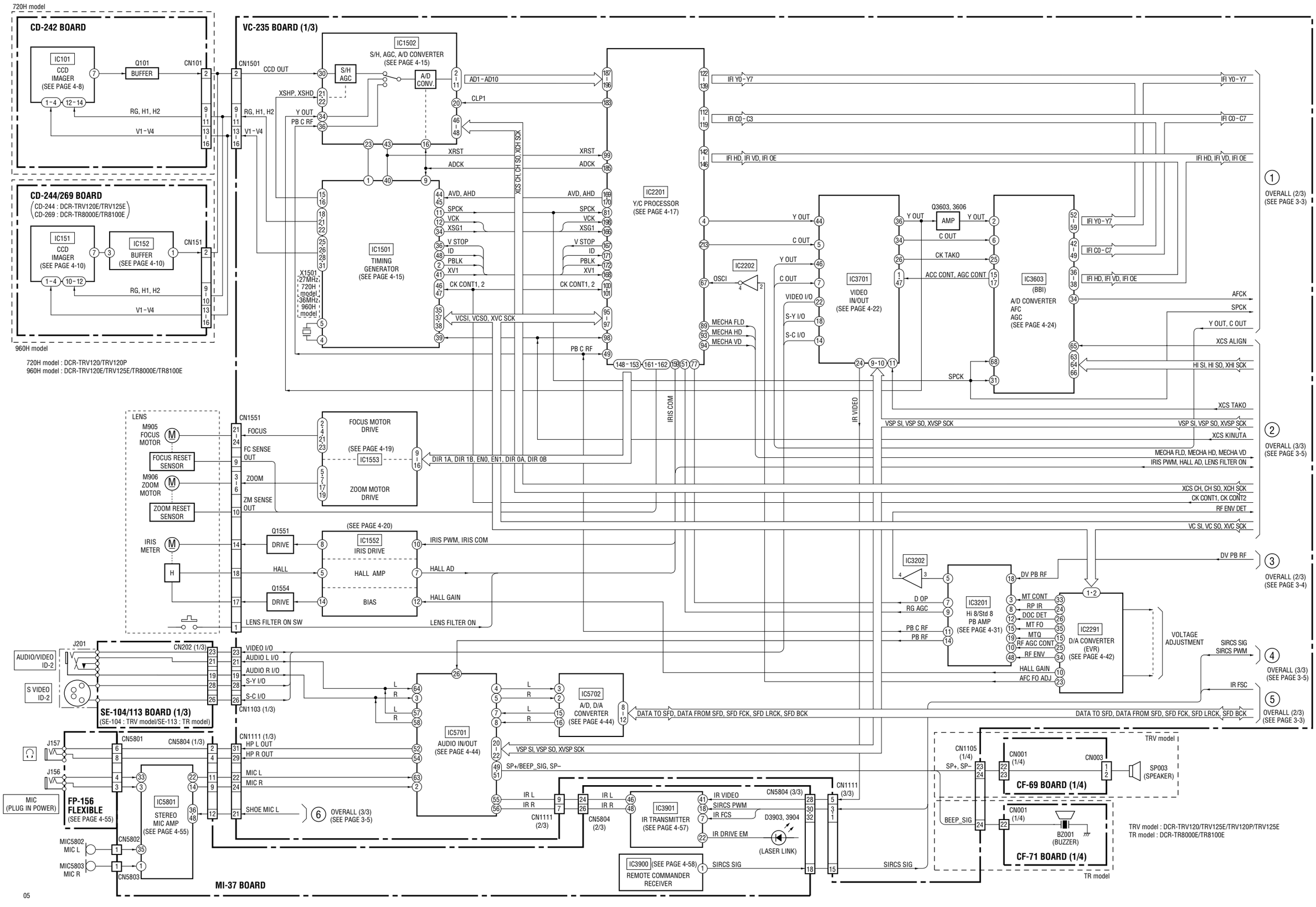

3-2. OVERALL BLOCK DIAGRAM 2

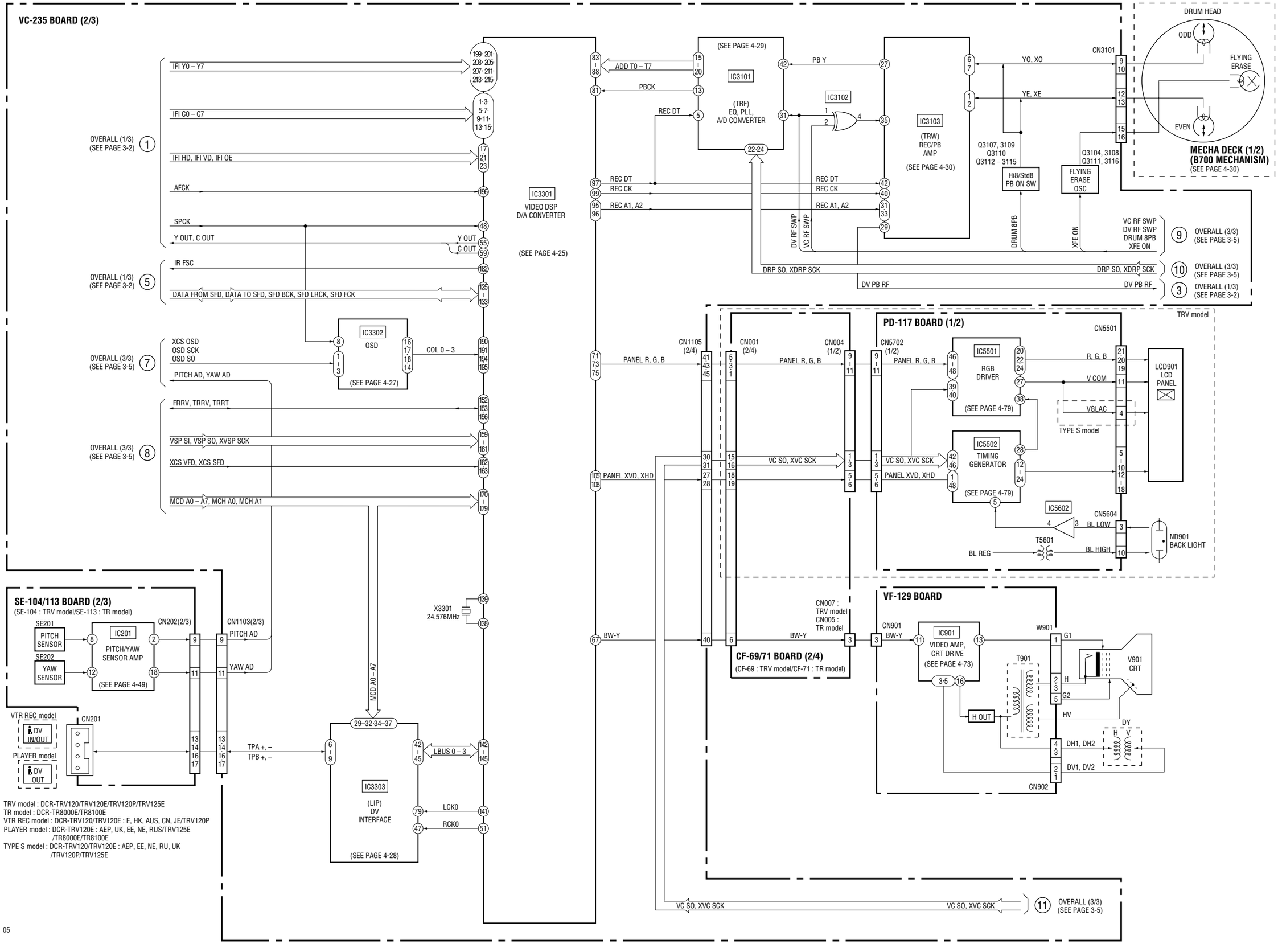

05

3-3. OVERALL BLOCK DIAGRAM 3

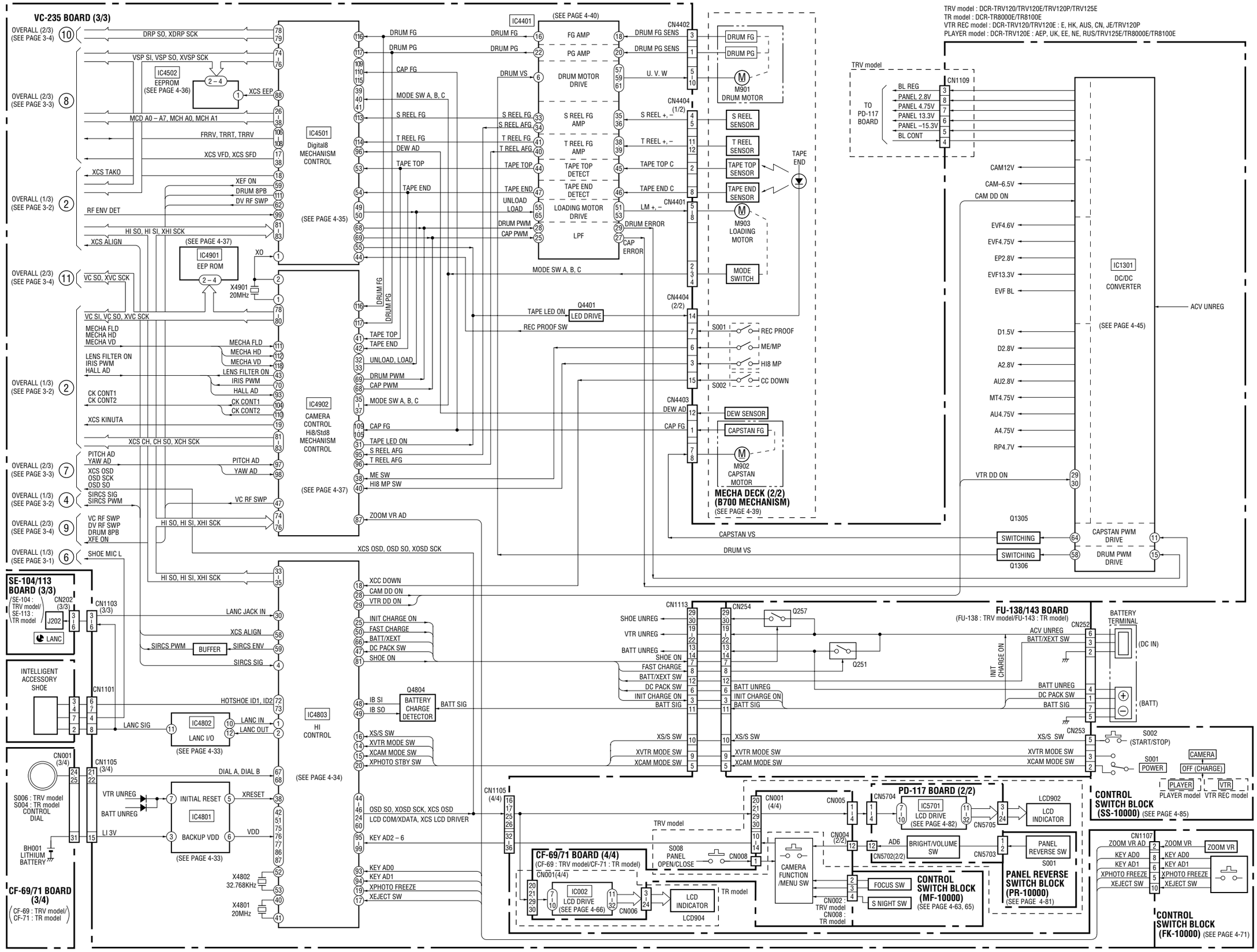

TRV model : DCR-TRV120/TRV120E/TRV120P/TRV125E
TR model : DCR-TR8000E/TR8100E
VTR REC model : DCR-TRV120/TRV120E : E, HK, AUS, CN, JE/TRV120P
PLAYER model : DCR-TRV120E : AEP, UK, EE, NE, RUS/TRV125E/TR8000E/TR8100E

05

3-4. POWER BLOCK DIAGRAM 1

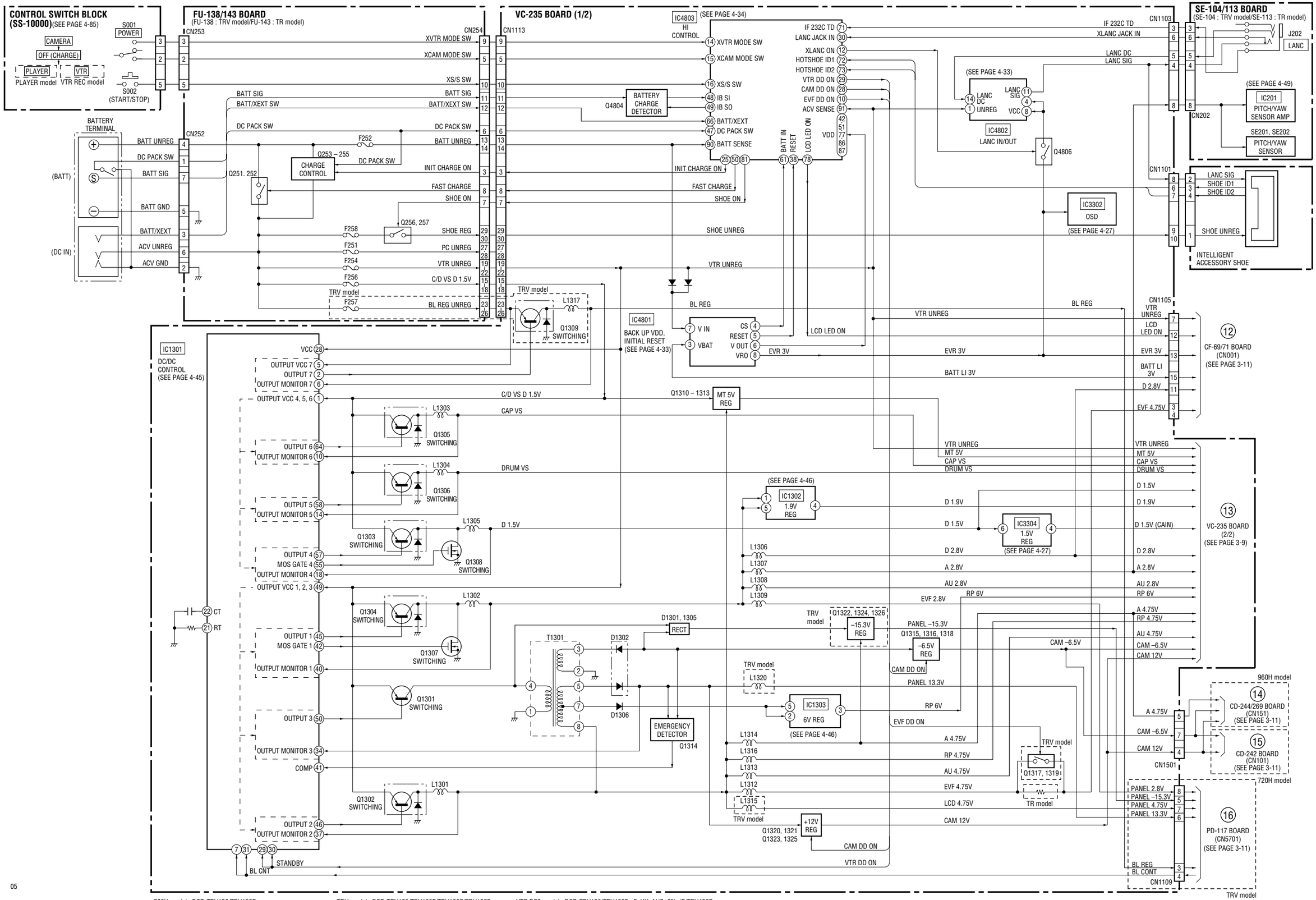

05

720H model : DCR-TRV120/TRV120P
960H model : DCR-TRV120E/TRV125E/TR8000E/TR8100E

TRV model : DCR-TRV120/TRV120E/TRV120P/TRV125E
TR model : DCR-TR8000E/TR8100E

VTR REC model : DCR-TRV120/TRV120E : E, HK, AUS, CN, JE/TRV120P
PLAYER model : DCR-TRV120E : AEP, UK, EE, NE, RUS/TRV125E/TR8000E/TR8100E

3-5. POWER BLOCK DIAGRAM 2

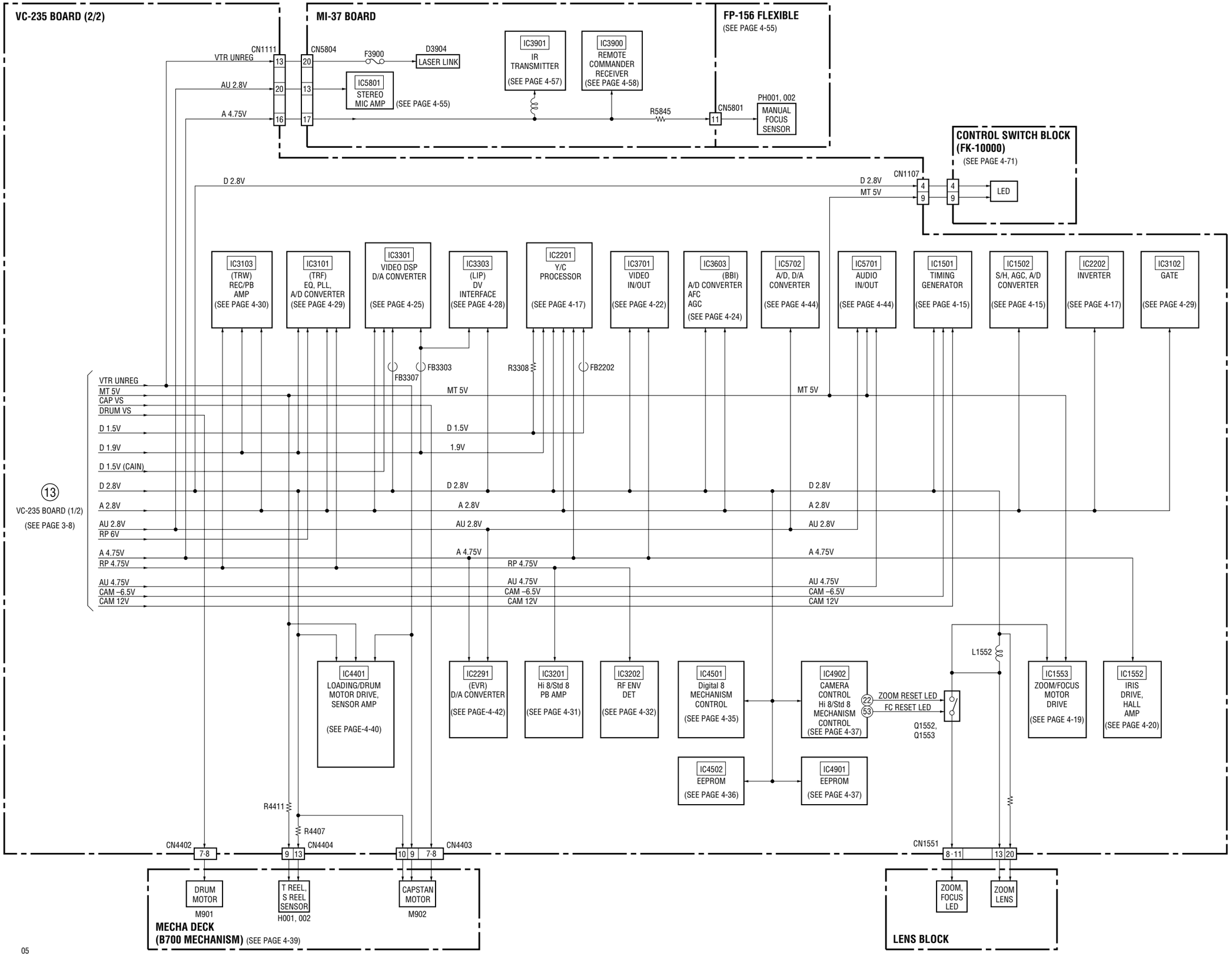

05

3-6. POWER BLOCK DIAGRAM 3

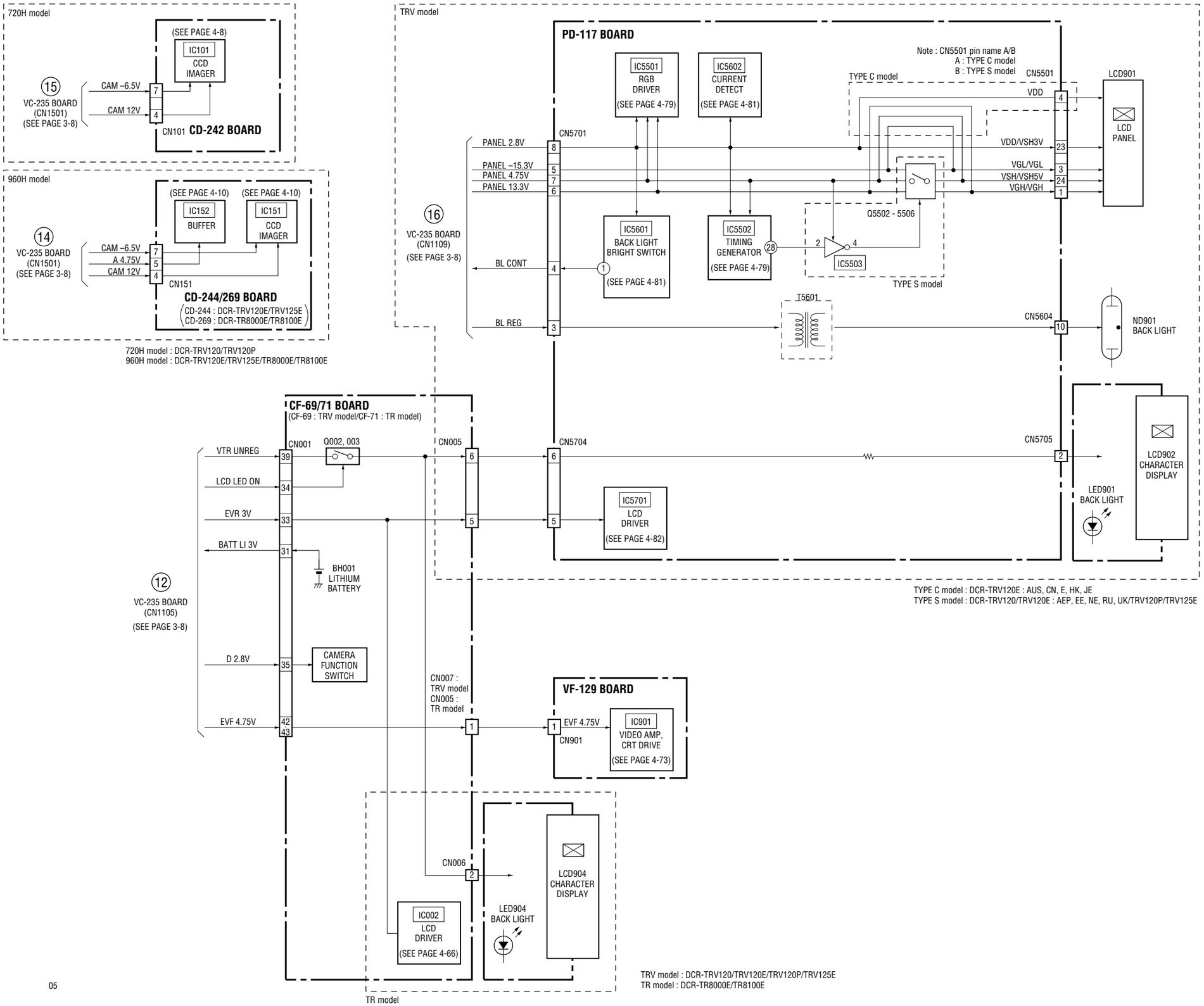

05

PRINTED WIRING BOARDS AND SCHEMATIC DIAGRAMS

THIS NOTE IS COMMON FOR WIRING BOARDS AND SCHEMATIC DIAGRAMS
(In addition to this, the necessary note is printed in each block)

(For printed wiring boards)

- ▒▒▒: Pattern from the side which enables seeing.
  (The other layers' patterns are not indicated)
- Through hole is omitted.
- Circled numbers refer to waveforms.
- There are few cases that the part printed on diagram isn't mounted in this model.
- Chip parts.

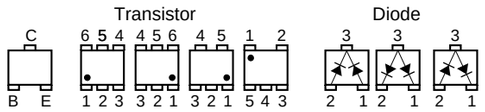

(For schematic diagrams)

- All capacitors are in μF unless otherwise noted. pF : μμF. 50 V or less are not indicated except for electrolytics and tantalums.
- Chip resistors are 1/10 W unless otherwise noted.
  kΩ=1000 Ω, MΩ=1000 kΩ.
- Caution when replacing chip parts.
  New parts must be attached after removal of chip.
  Be careful not to heat the minus side of tantalum capacitor, Because it is damaged by the heat.
- Some chip part will be indicated as follows.

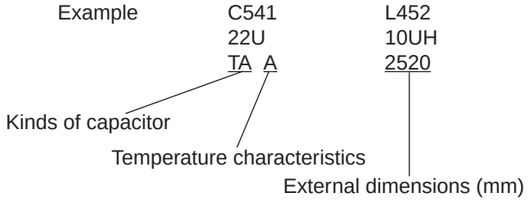

- Constants of resistors, capacitors, ICs and etc with XX indicate that they are not used.
  In such cases, the unused circuits may be indicated.
- Parts with ★ differ according to the model/destination.
  Refer to the mount table for each function.
- All variable and adjustable resistors have characteristic curve B, unless otherwise noted.
- Signal name
  XEDIT → $\overline{\text{EDIT}}$ PB/XREC → PB/$\overline{\text{REC}}$
- : non flammable resistor
- : fusible resistor
- : panel designation
- : B+ Line *
- : B– Line *
- : IN/OUT direction of (+,–) B LINE. *
- : adjustment for repair. *
- Circled numbers refer to waveforms. *

* Indicated by the color red.

Note : The components identified by mark ⚠ or dotted line with mark ⚠ are critical for safety. Replace only with part number specified.

Note : Les composants identifiés par une marque ⚠ sont critiques pour la sécurité. Ne les remplacer que par une pièce portant le numéro spécifie.

(Measuring conditions voltage and waveform)

- Voltages and waveforms are measured between the measurement points and ground when camera shoots color bar chart of pattern box. They are reference values and reference waveforms. *
  (VOM of DC 10 MΩ input impedance is used)
- Voltage values change depending upon input impedance of VOM used.)

1. Connection

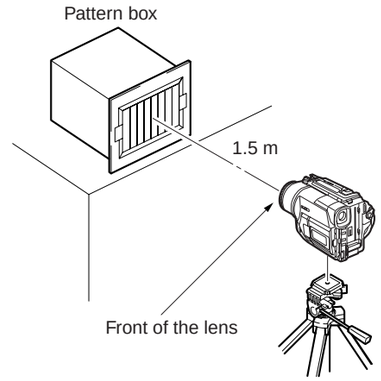

2. Adjust the distance so that the output waveform of Fig. a and the Fig. b can be obtain.

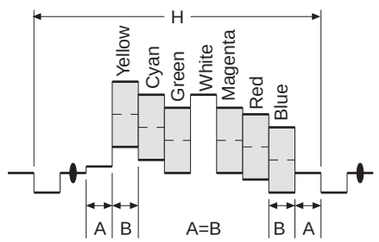

Fig. a (Video output terminal output waveform)

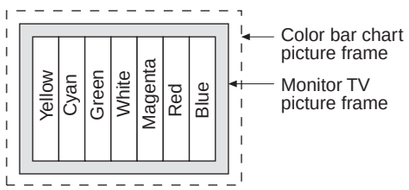

Fig.b (Picture on monitor TV)

When indicating parts by reference number, please include the board name.

4-1. FRAME SCHEMATIC DIAGRAMS

FRAME (1/2) SCHEMATIC DIAGRAM

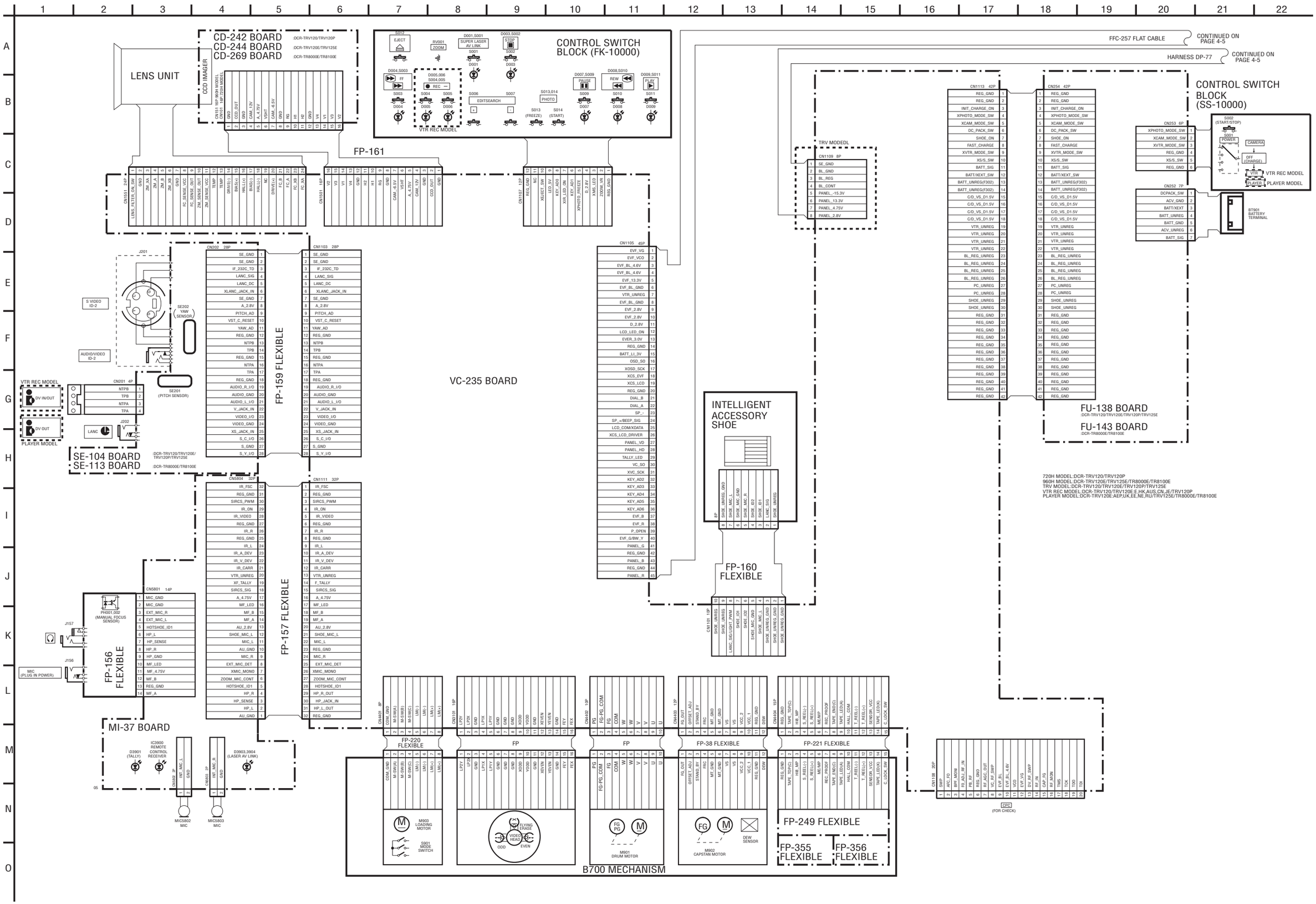

FRAME (2/2) SCHEMATIC DIAGRAM

TRV MODEL:DCR-TRV120/TRV120E/TRV120P/TRV125E
TR MODEL:DCR-TR8000E/TR8100E
TYPE C MODEL:DCR-TRV120E:E,HK,AUS,CN,JE
TYPE S 61k/123k MODEL:DCR-TRV120/TRV120E:AEP,UK,EE,NE,RU/TRV120P/TRV125E

TR MODEL

LCD904
LCD BLOCK (CHARACTER DISPLAY)

Hi8 Handycam8 01:23:45

LED904 BACK LIGHT

FP-94 FLEXIBLE

CN006 26P: 1 BL_GND, 2 BL_VDD, 3 COM3, 4 COM4, 5 SEG17, 6 SEG18, 7 SEG15, 8 SEG16, 9 SEG1, 10 SEG14, 11 SEG13, 12 SEG12, 13 SEG11, 14 SEG10, 15 SEG9, 16 SEG8, 17 SEG7, 18 SEG6, 19 SEG5, 20 SEG4, 21 SEG3, 22 SEG2, 23 COM2, 24 COM1, 25 BL_GND, 26 BL_VDD

CONTROL SWITCH BLOCK (MF-10000)

S002 SUPER NIGHT SHOT
FOCUS
AUTO / MAN / INFI
S001

CN002 4P :TRV MODEL
CN008 4P :TR MODEL
1 REG_GND
2 INFINITY
3 AUTO
4 S_NIGHT_SW

S001 DIGITAL EFFECT
S002 PICTURE EFFECT
S003 DATA CODE
S005 MENU
S006 TITLE
S007 EXPOSURE
S008 PB ZOOM
S004 SEL/PUSH EXEC
S009 PROGRAM AE
S010 BACK LIGHT
S011 FADER
BZ001 (BUZZER)

CF-69 BOARD :TRV MODEL
CF-71 BOARD :TR MODEL

CN001 45P
45 EVF_VG
44 EVF_VCO
43 EVF_BL
42 EVF_BL
41 EVF_13.3V
40 EVF_BL_GND
39 VTR_UNREG
38 EVF_BL_GND
37 EVF_2.8V
36 EVF_2.8V
35 D_2.8V
34 LCD_LED_ON
33 EVER_3.0V
32 REG_GND
31 BATT_LI_3V
30 XOSD_SO
29 XOSD_SCK
28 XCS_EVF
27 XCS_LCD
26 REG_GND
25 DIAL_B
24 DIAL_A
23 SP_-
22 SP_+/BEEP_SIG
21 LCD_COM/XDATA
20 XCS_LCD_DRIVER
19 PANEL_XVD
18 PANEL_XHD
17 TALLY_LED
16 VC_SO
15 XVC_SCK
14 KEY_AD2
13 KEY_AD3
12 KEY_AD4
11 KEY_AD5
10 KEY_AD6
9 EVF_B
8 EVF_R
7 REG_GND
6 EVF_G/BW_Y
5 PANEL_G
4 REG_GND
3 PANEL_B
2 REG_GND
1 PANEL_R

CONTINUED ON PAGE 4-4

FFC-257 FLAT CABLE

CN007 4P :TRV MODEL
CN005 4P :TR MODEL
EVF_4.75V 1
EVF_GND 2
BW_EVF_Y 3
XTALLY_LED 4

FFC-289 FLAT CABLE

CN901 4P
1 EVF_4.75V
2 EVF_GND
3 BW_EVF_Y
4 TALLY_LED

VF-129 BOARD

W901 5P: 5 G2, 4 N.C., 3 H, 2 H, 1 G1

T901 FBT

CN902 4P
DV1 1
DV2 2
DH1 3
DH2 4

V901 CRT ASSY

BH001 LITHIUM BATTERY HOLDER

ND901 BACK LIGHT

LCD901 2.5INCH LCD UNIT

CN6604 10P: 1 LED_GND, 2 LED, 3 BL_LOW, 4 N.C, 5 N.C, 6 N.C, 7 N.C, 8 N.C, 9 N.C, 10 BL_HIGH

CN5501 24P: 1 VGH/XGH, 2 VSS/GND, 3 VGL/VEL, 4 VDD/VGLAC, 5 N.C./SPS, 6 DHES/EX1, 7 GPCK/MOI, 8 GSRT/MO2, 9 STBYB/PSG, 10 RESET/EX2, 11 VCOM/VCOM, 12 VBC/CLS, 13 STBYB/RES, 14 SRT/PSS1, 15 OE/PSS2, 16 CLR/GTR, 17 MCLK/CLD, 18 HCMT/SPD, 19 VR/VR, 20 VG/VG, 21 VB/VB, 22 VSS/GND, 23 VDD/VSH/SV, 24 VEH/VSH/SV

Note:CN5501 Pin Name
A/B TYPE S 61k/123k MODEL
R TYPE S 61k MODEL

PD-117 BOARD

D5602 (STARTER)

S5701 LCD BRIGHT +
S5702 LCD BRIGHT -
S5703 VOLUME +
S5704 VOLUME -

CN5502 10P
GND 10
GND 9
XHD_OUT 8
C-SYNC/XHD 7
N.C. 6
VR 5
PANEL_COM 4
VG 3
XVD_OUT 2
VB 1

CPC (FOR CHECK)

CN5705 26P: 1 BL_GND, 2 BL_VDD, 3 COM3, 4 COM4, 5 SEG17, 6 SEG18, 7 SEG15, 8 SEG16, 9 SEG1, 10 SEG14, 11 SEG13, 12 SEG12, 13 SEG11, 14 SEG10, 15 SEG9, 16 SEG8, 17 SEG7, 18 SEG6, 19 SEG5, 20 SEG4, 21 SEG3, 22 SEG2, 23 COM2, 24 COM1, 25 BL_GND, 26 BL_VDD

CN5703 6P: 6 GND, 5 GND, 4 N.C., 3 N.C., 2 PANEL_REV, 1 PANEL_REV

LED901 BACK LIGHT

FP-94 FLEXIBLE

Handycam8 Hi8 01:23:45

LCD902 LCD BLOCK (CHARACTER DISPLAY)

PANEL REVERSE SWITCH BLOCK (PR-10000)
S001 (PANEL REVERSE)

CN005 6P
XCS_LCD_DRIVER 1
LCD_COM/XDATA 2
OSD_SO 3
XOSD_SCK 4
DISP_LCD_VDD 5
DISP_BL 6

CP-81 HARNESS

CN5704 6P
1 XCS_LCD_DRIVER
2 LCD_COM/XDATA
3 OSD_SO
4 XOSD_SCK
5 DISP_LCD_VDD
6 DISP_BL

CN004 12P
XVC_SCK 1
XCS_LCD_DA 2
VC_SO 3
REG_GND 4
PANEL_XVD 5
C-SYNC 6
REG_GND 7
REG_GND 8
PANEL_B 9
PANEL_G 10
PANEL_R 11
AD6 12

CP-82 HARNESS

CN5702 12P
1 XVC_SCK
2 XCS_LCD_DA
3 VC_SO
4 REG_GND
5 PANEL_XVD
6 C-SYNC/XHD
7 PANEL_HOLD
8 REG_GND
9 PANEL_B
10 PANEL_G
11 PANEL_R
12 AD6

CN5701 8P
1 SE_GND
2 BL_GND
3 BL_REG
4 BL_CONT
5 PANEL_-15.3V
6 PANEL_13.3V
7 PANEL_4.75V
8 PANEL_2.8V

CN008 2P
OPEN/CLOSE 1
GND 2

S008 PANEL OPEN/CLOSE

CN003 2P
SP(-) 2
SP(+) 1

SP003 (SPEAKER)

S006 SEL/PUSH EXEC
S001 DIGITAL EFFECT
S003 PICTURE EFFECT
S005 DATA CODE
S007 MENU
S009 END SEARCH
S010 TITLE
S014 PB ZOOM
S016 DISPLAY
S013 EXPOSURE
S017 PROGRAM AE
S019 BACK LIGHT
S020 FADER

CONTINUED ON PAGE 4-4

DP-77 HARNESS

TRV MODEL

05

4-2. PRINTED WIRING BOARDS AND SCHEMATIC DIAGRAMS

CD-242 (CCD IMAGER) PRINTED WIRING BOARD AND SCHEMATIC DIAGRAM

– Ref. No.: CD-242 board; 20,000 series –

– DCR-TRV120/TRV120P –

- **For Printed Wiring Board.**
- There are few cases that the part isn't mounted in this model is printed on this diagram.
- Chip transistor

CD-242 BOARD (SIDE A)

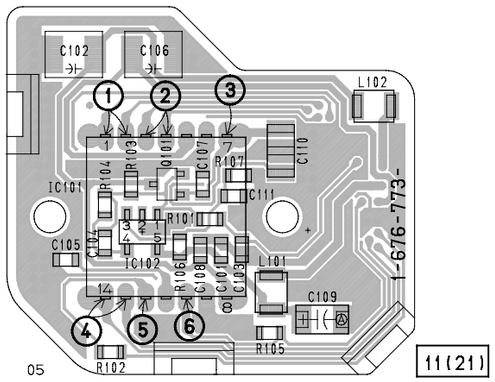

CD-242 BOARD (SIDE B)

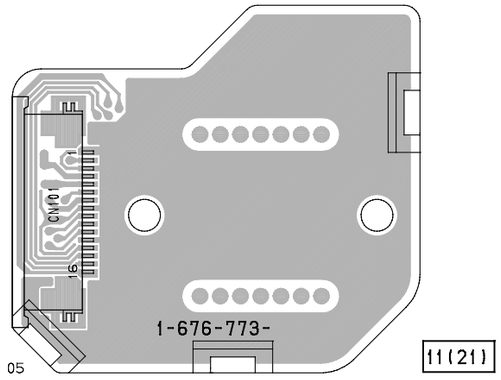

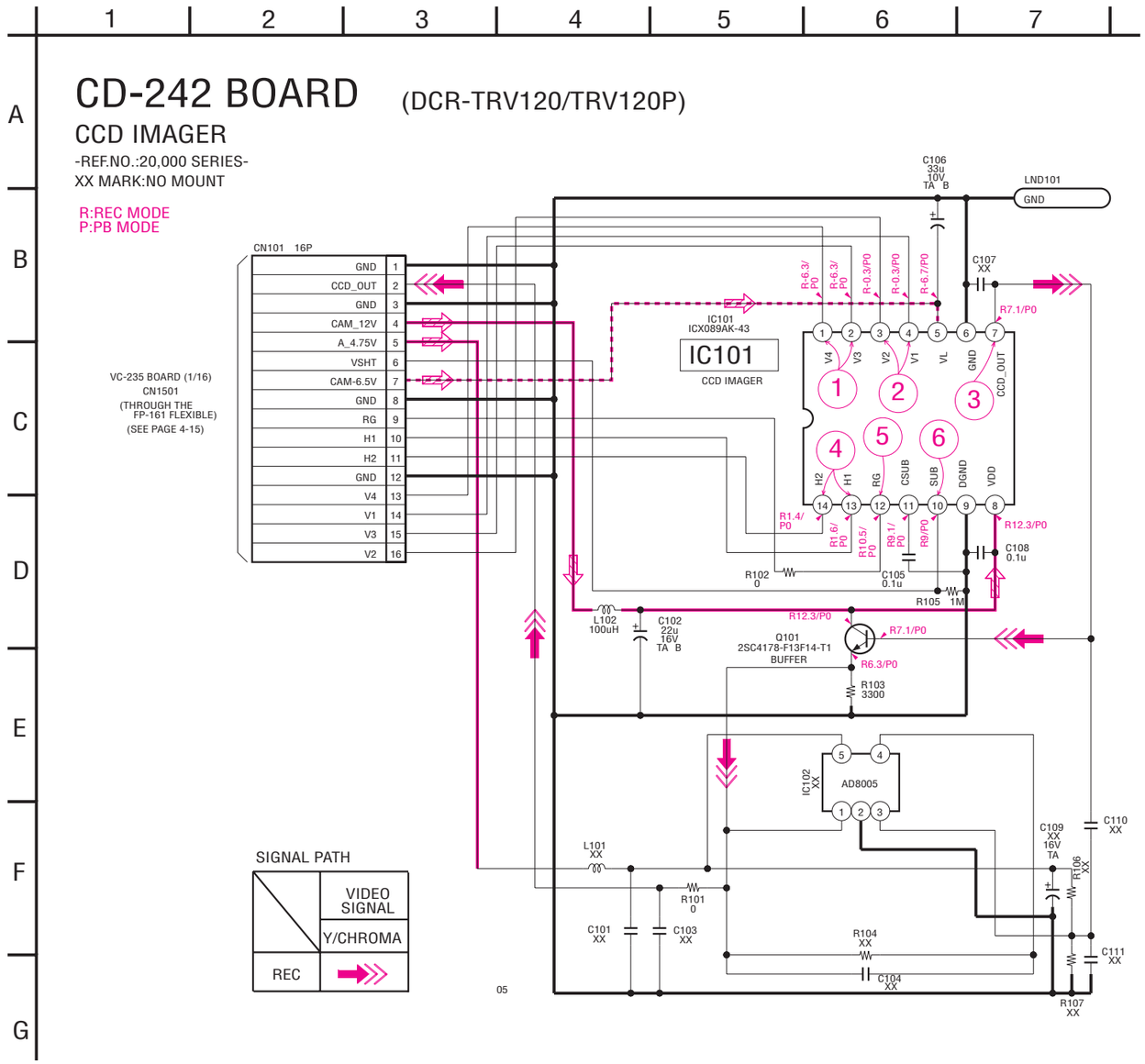

Precautions for Replacement of CCD Imager

- The CD-242 board mounted as a repair part is not equipped with a CCD imager.
  When replacing this board, remove the CCD imager from the old one and mount it onto the new one.
- If the CCD imager has been replaced, carry out all the adjustments for the camera section.
- As the CCD imager may be damaged by static electricity from its structure, handle it carefully like for the MOS IC.
  In addition, ensure that the receiver is not covered with dusts nor exposed to strong light.

CD-244/269 (CCD IMAGER) PRINTED WIRING BOARD AND SHEMATIC DIAGRAM

• See page 4-87 for waveforms.

– Ref. No.: CD-244/269 board; 20,000 series –

– DCR-TRV120E/TRV125E/TR8000E/TR8100E –

- **For Printed Wiring Board.**
- There are few cases that the part isn't mounted in this model is printed on this diagram.
- Chip transistor

CD-244/269 BOARD
(SIDE A)

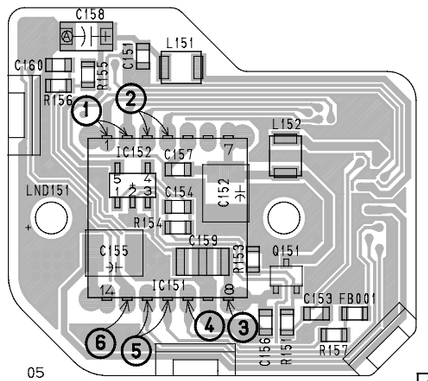

CD-244:1-676-774-
CD-269:1-676-755-

11(21)
11

CD-244/269 BOARD
(SIDE B)

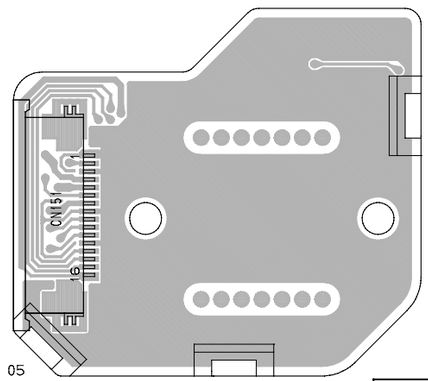

CD-244:1-676-774-
CD-269:1-676-755-

11(21)
11

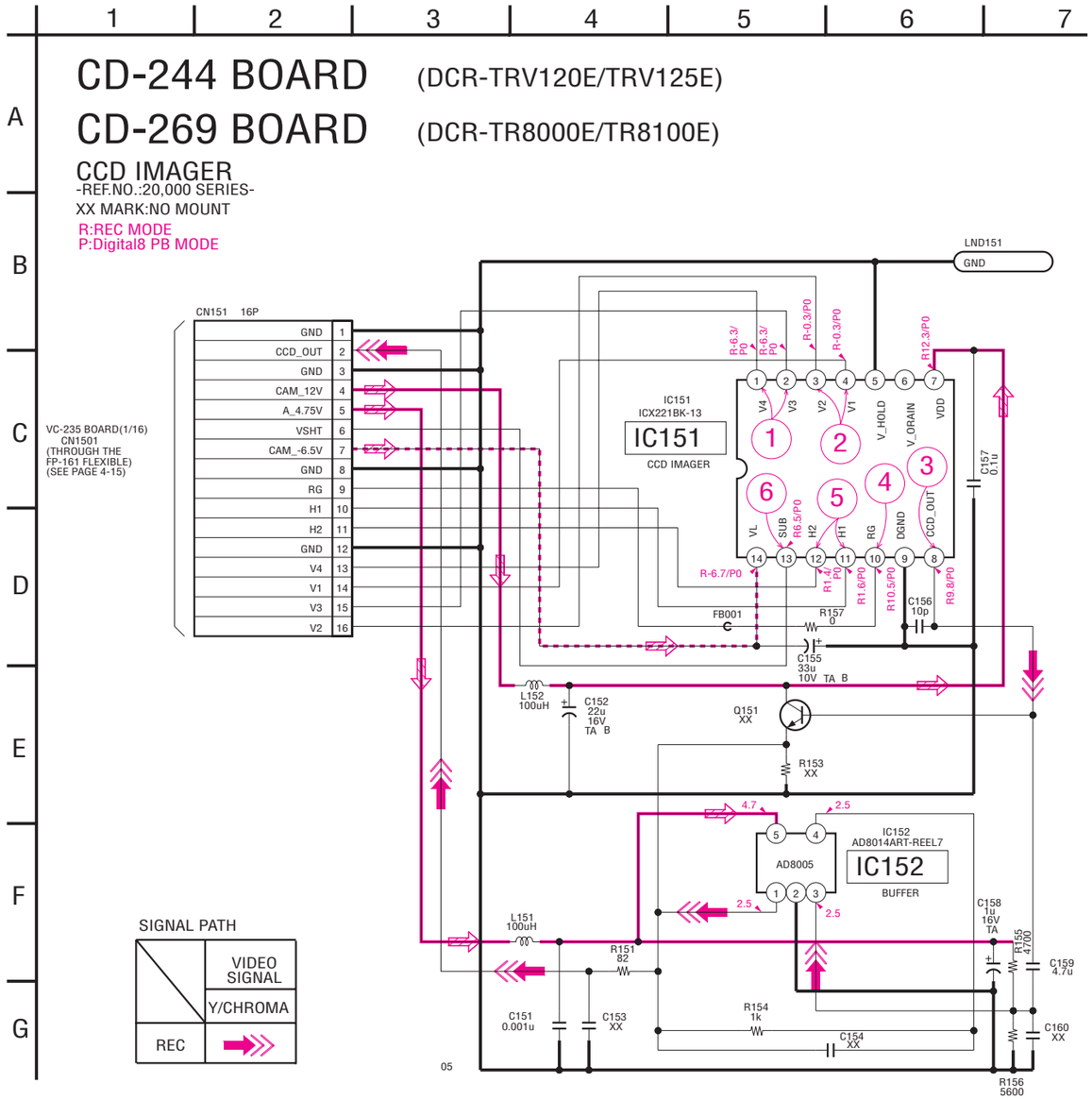

Precautions for Replacement of CCD Imager

- The CD-244/269 board mounted as a repair part is not equipped with a CCD imager.
  When replacing this board, remove the CCD imager from the old one and mount it onto the new one.
- If the CCD imager has been replaced, carry out all the adjustments for the camera section.
- As the CCD imager may be damaged by static electricity from its structure, handle it carefully like for the MOS IC.
  In addition, ensure that the receiver is not covered with dusts nor exposed to strong light.

VC-235 (CAMERA PROCESSOR, Y/C PROCESSOR, LENS MOTOR DRIVE, VIDEO/AUDIO IN/OUT, BASE BAND INPUT, VIDEO /AUDIO DSP, DV INTERFACE, OSD, A/D CONVERTER, REC/PB AMP, Hi8/Std8 PB AMP, HI/MECHANISM/CAMERA CONTROL, SERVO, D/A CONVERTER, DC/DC CONVERTER) PRINTED WIRING BOARD

– Ref. No.: VC-235 board; 10,000 series –

- **For Printed Wiring Board.**
- VC-235 board is eight-layer print board. However, the patterns of layers 2 to 7 have not been included in the diagram.
- There are few cases that the part isn't mounted in this model is printed on this diagram.
- See page 4-91, 92 for printed parts location.
- Chip transistor

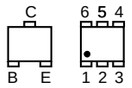

VC-235 BOARD (SIDE A)
Part No. 1-676-764-12 (22, 32)
Location: E – 4, 5

- Refer to the printed wiring board for suffix number 11 (21, 31) for the parts not be shown here.

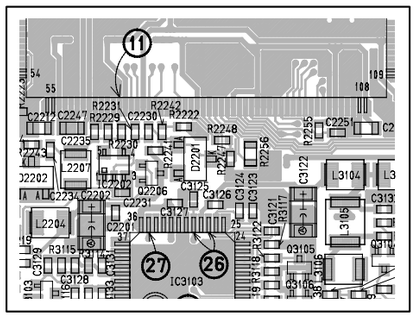

VC-235 BOARD (SIDE A)

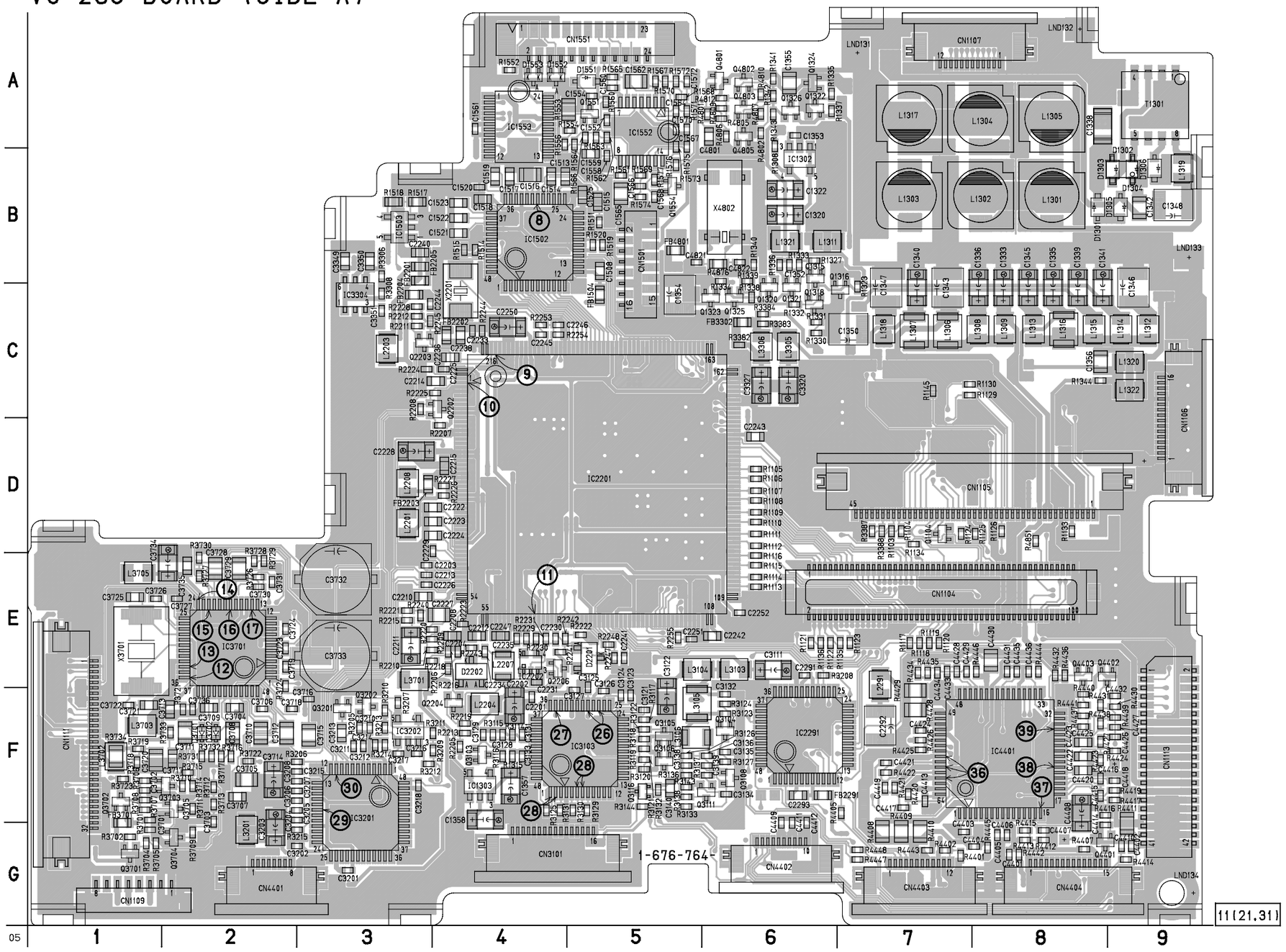

CAMERA PROCESSOR, Y/C PROCESSOR, LENS MOTOR DRIVE, VIDEO/AUDIO IN/OUT, BASE BAND INPUT, VIDEO/AUDIO DSP, DV INTERFACE, OSD, A/D CONVERTER, REC/PB AMP, Hi8/Std8 PB AMP, HI/MECHANISM/CAMERA CONTROL, SERVO, D/A CONVERTER, DC/DC CONVERTER

VC-235 BOARD (SIDE B)

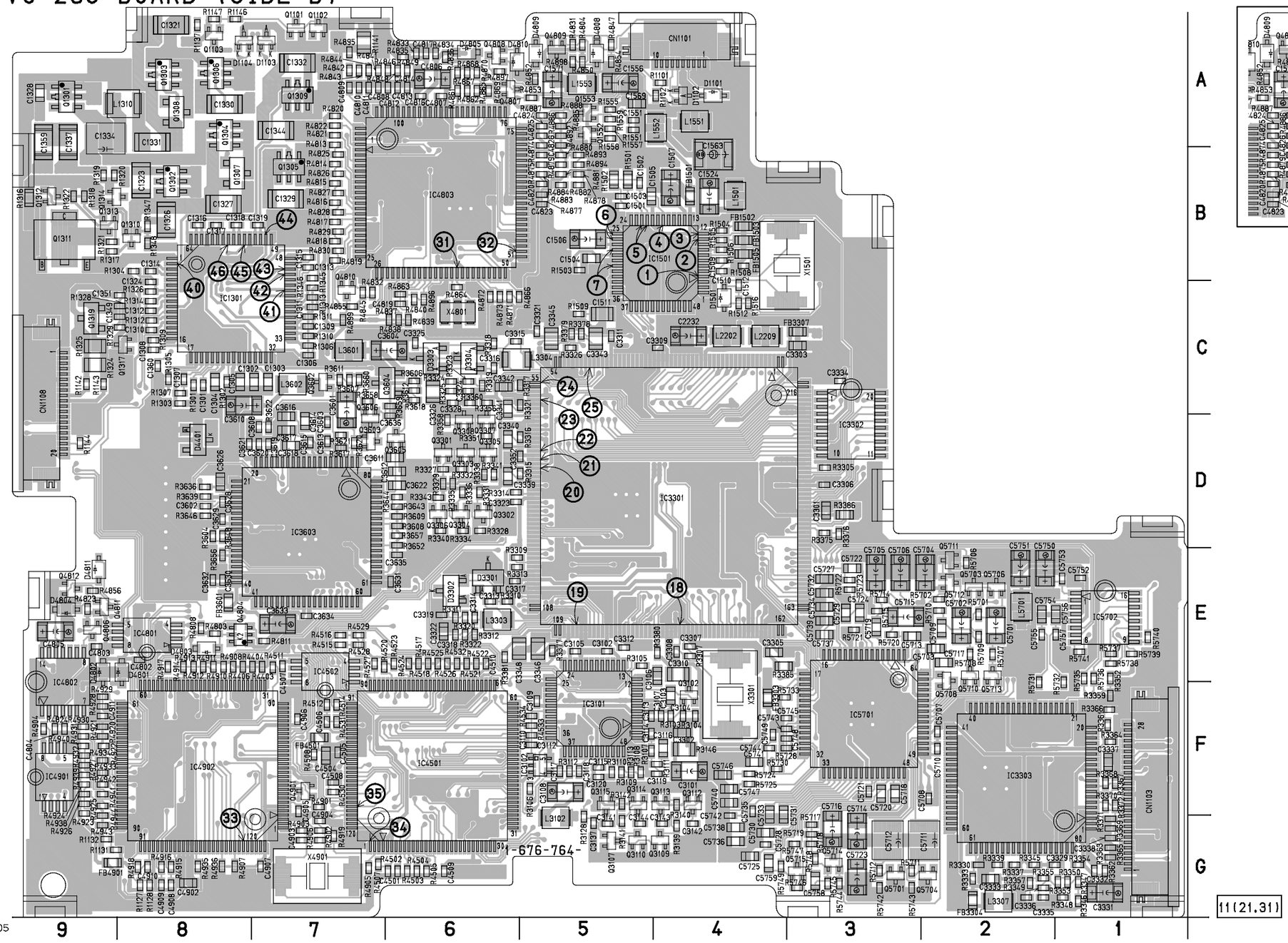

VC-235 BOARD (SIDE B)
Part No. 1-676-764-12 (22, 32)
Location: A – 4, 5

- Refer to the printed wiring board for suffix number 11 (21, 31) for the parts not be shown here.

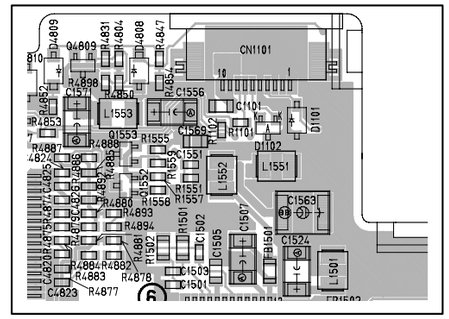

VC-235 (CAMERA PROCESSOR) SCHEMATIC DIAGRAM • See page 4-11 for VC-235 printed wiring board. • See page 4-87 for waveforms.

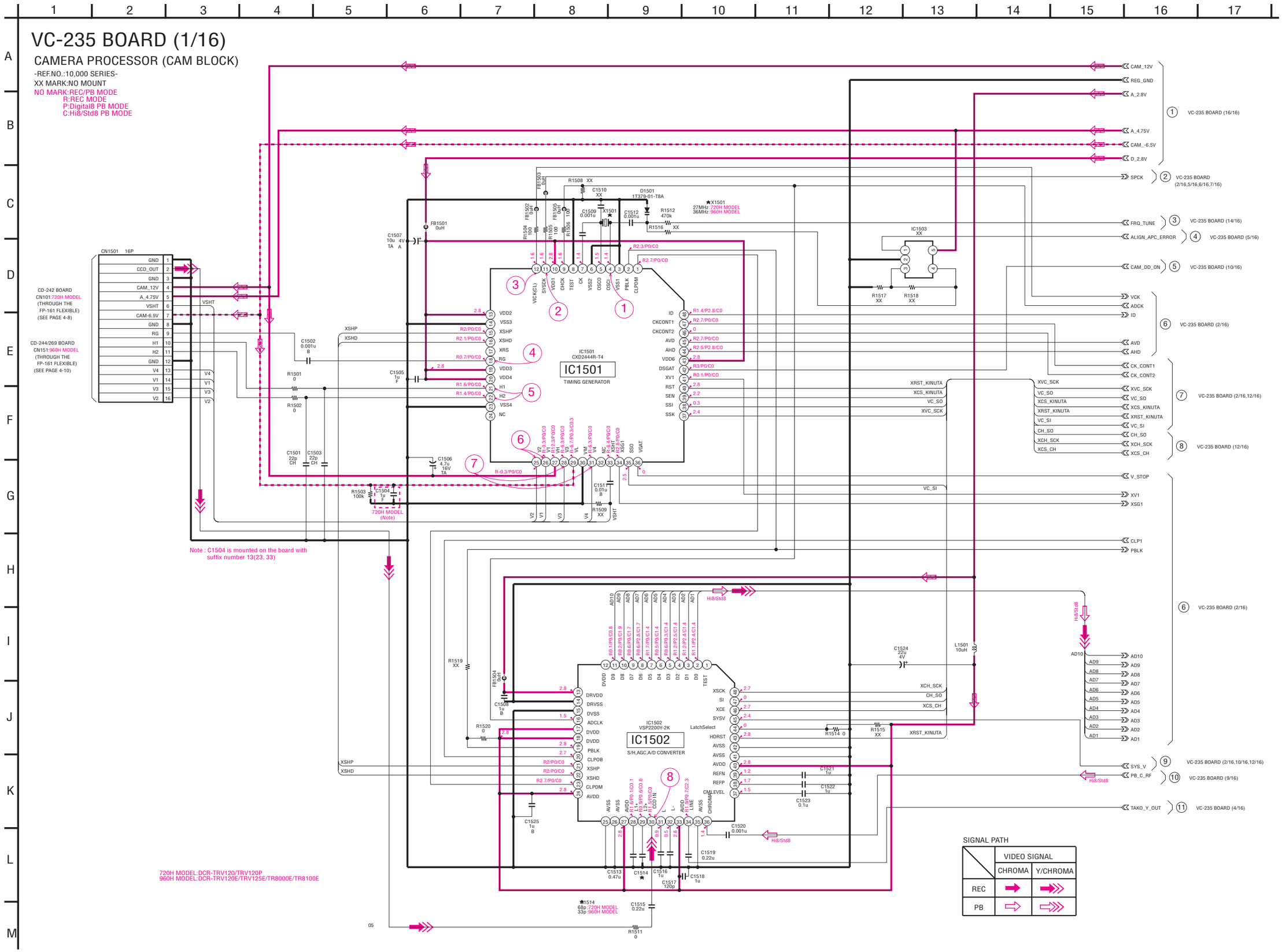

VC-235 (Y/C PROCESSOR) SCHEMATIC DIAGRAM • See page 4-11 for VC-235 printed wiring board. • See page 4-87 for waveforms.

VC-235 BOARD (2/16)

Y/C PROCESSOR (KINUTA BLOCK)

-REF.NO.:10,000 SERIES-
XX MARK:NO MOUNT

NO MARK:REC/PB MODE
R:REC MODE
P:Digital8 PB MODE
C:Hi8/Std8 PB MODE

IC2201
HG75C012FFL
IC2201
Y/C PROCESSOR

Note 1:R2256 is mounted on the board with suffix number 12(22,32)
Note 2:R2256 is not mounted on the board with suffix number 11(21,31)

SIGNAL PATH

	VIDEO SIGNAL		
	CHROMA	Y	Y/CHROMA
REC	➡	➡➡	➡➡➡
PB	⇨	⇨⇨	

	REC	PB
Ref.signal		⇨

VC-235 (LENS MOTOR DRIVE) SCHEMATIC DIAGRAM • See page 4-11 for VC-235 printed wiring board.

VC-235 BOARD (3/16)

LENS MOTOR DRIVE (LD BLOCK)

-REF.NO.:10,000 SERIES-
XX MARK:NO MOUNT
NO MARK:REC/PB MODE
R:REC MODE
P:PB MODE

LENS UNIT

CN1551 24P

IC1552 NJM324V(TE2) HALL/IRIS DRIVE

IC1553 UPD16877MA-6A5-E2 FOCUS/ZOOM MOTOR DRIVE

Q1551 2SC4738F-Y/GR(TPL3) IRIS METER DRIVE

Q1553 2SA1832F-Y/GR(TPL3) ZOOM SENSOR SWITCH

Q1552 2SA1832F-Y/GR(TPL3) FOCUS SENSOR SWITCH

Q1554 2SC4738F-Y/GR(TPL3) AMP

LENS_FILTER_ON_SW
HALL_AD
HALL_REF
HALL_OFFSET
HALL_GAIN
D_2.8V
A_4.75V
REG_GND
MT_GND
MT_5V
ZM_RST_LED
IRIS_PWM
FC_RST_LED
FC_RST
ZM_RST
LENS_TEMP_AD
IRIS_COM
ZM_RST
FC_RST
DIR1B
DIR1A
EN1
EN0
DIR0A
DIR0B

21 VC-235 BOARD (12/16)
22 VC-235 BOARD (14/16)
23 VC-235 BOARD (16/16)
21 VC-235 BOARD (12/16)
19 VC-235 BOARD (2/16)

VC-235 (VIDEO IN/OUT) SCHEMATIC DIAGRAM • See page 4-11 for VC-235 printed wiring board. • See page 4-88 for waveforms.

VC-235 BOARD (4/16)

VIDEO IN/OUT (TAKO BLOCK)

-REF.NO.:10,000 SERIES-
XX MARK:NO MOUNT

NO MARK:REC/PB MODE
R:REC MODE
P:Digital8 PB MODE
C:Hi8/Std8 PB MODE

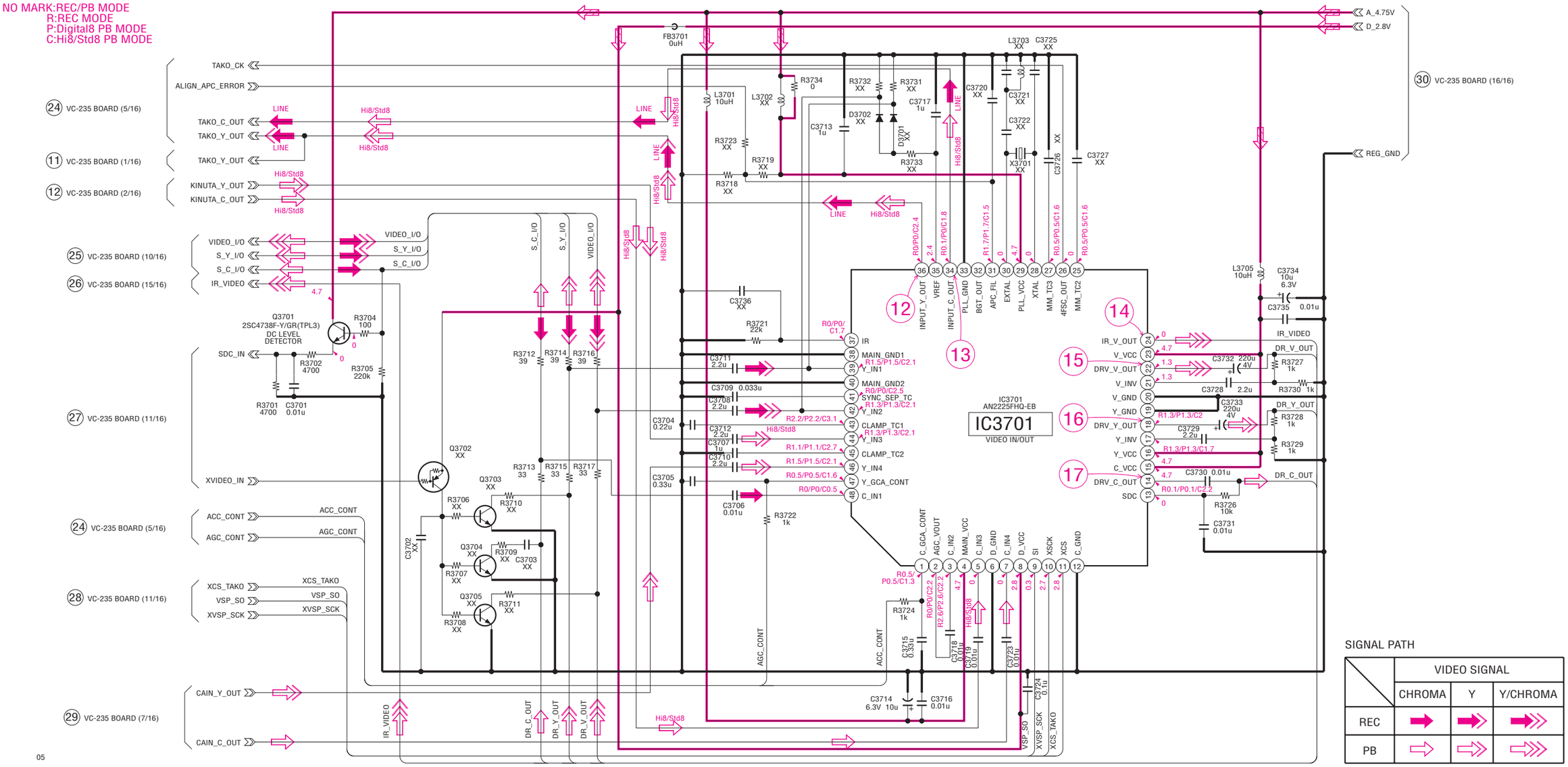

VC-235 (BASE BAND INPUT) SCHEMATIC DIAGRAM • See page 4-11 for VC-235 printed wiring board.

VC-235 BOARD (5/16)

BASE BAND INPUT (ALIGN BLOCK)

-REF.NO.:10,000 SERIES-
XX MARK:NO MOUNT

NO MARK:REC/PB MODE
R:REC MODE
P:Digital8 PB MODE
C:Hi8/Std8 PB MODE

SIGNAL PATH

	VIDEO SIGNAL	
	CHROMA	Y
REC	➡	➡
PB	⇨	⇨

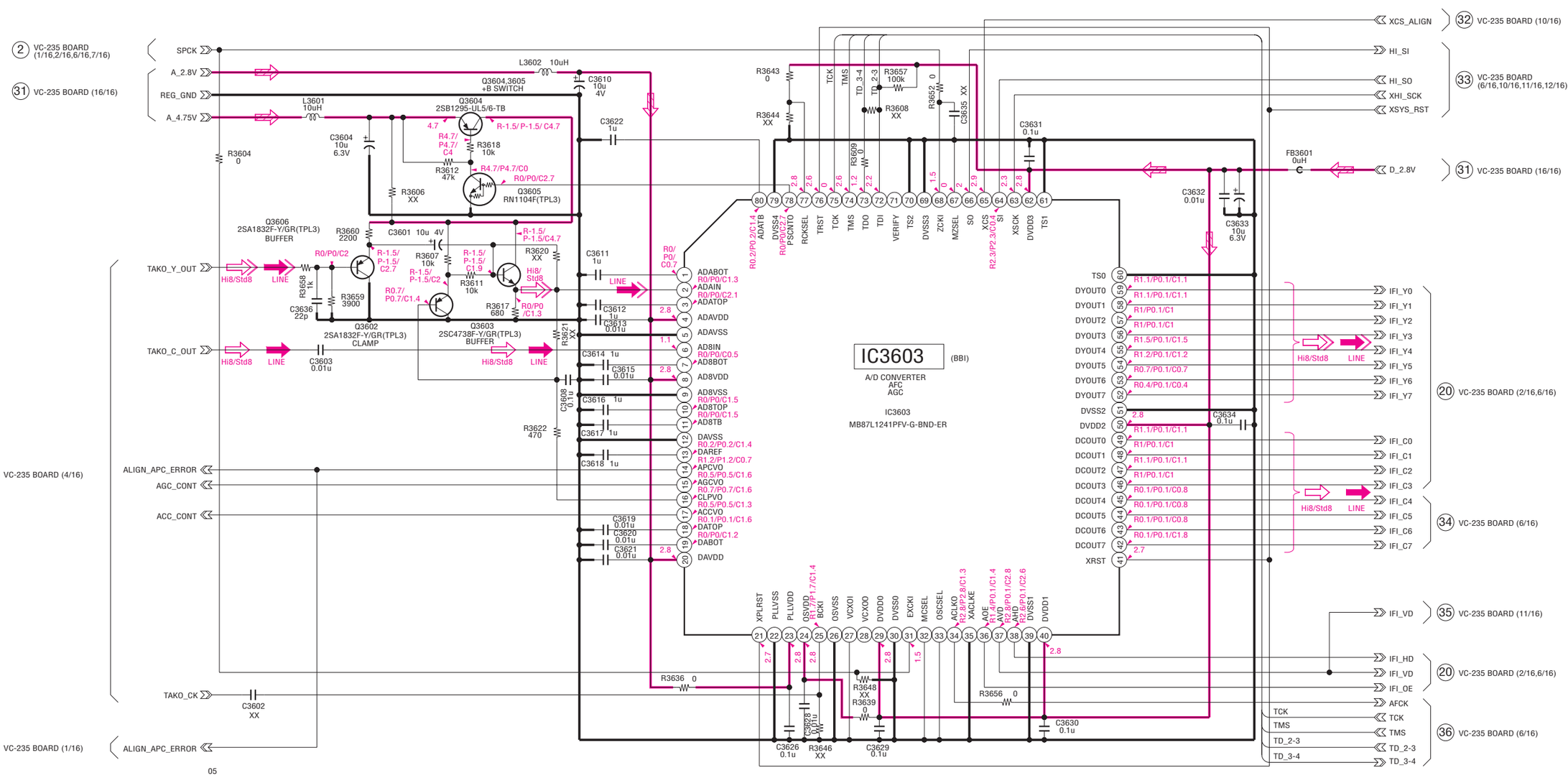

VC-235 (VIDEO/AUDIO DSP, D/A CONVERTER) SCHEMATIC DIAGRAM

• See page 4-11 for VC-235 printed wiring board. • See page 4-87, 88 for waveforms.

VC-235 BOARD (6/16)

VIDEO/AUDIO DSP,D/A CONVERTER (JC1 BLOCK)

-REF.NO.:10,000 SERIES-
XX MARK:NO MOUNT

NO MARK:REC/PB MODE
R:REC MODE
P:Digital8 PB MODE
C:Hi8/Std8 PB MODE

IC3301
CAIN
IC3301
VIDEO/AUDIO DSP
D/A CONVERTER

SIGNAL PATH

	VIDEO SIGNAL			AUDIO SIGNAL
	CHROMA	Y	Y/CHROMA	
REC	➡	➡	➡	➡
PB	⇨	⇨	⇨	⇨

VC-235 (DV INTERFACE, OSD) SCHEMATIC DIAGRAM • See page 4-11 for VC-235 printed wiring board.

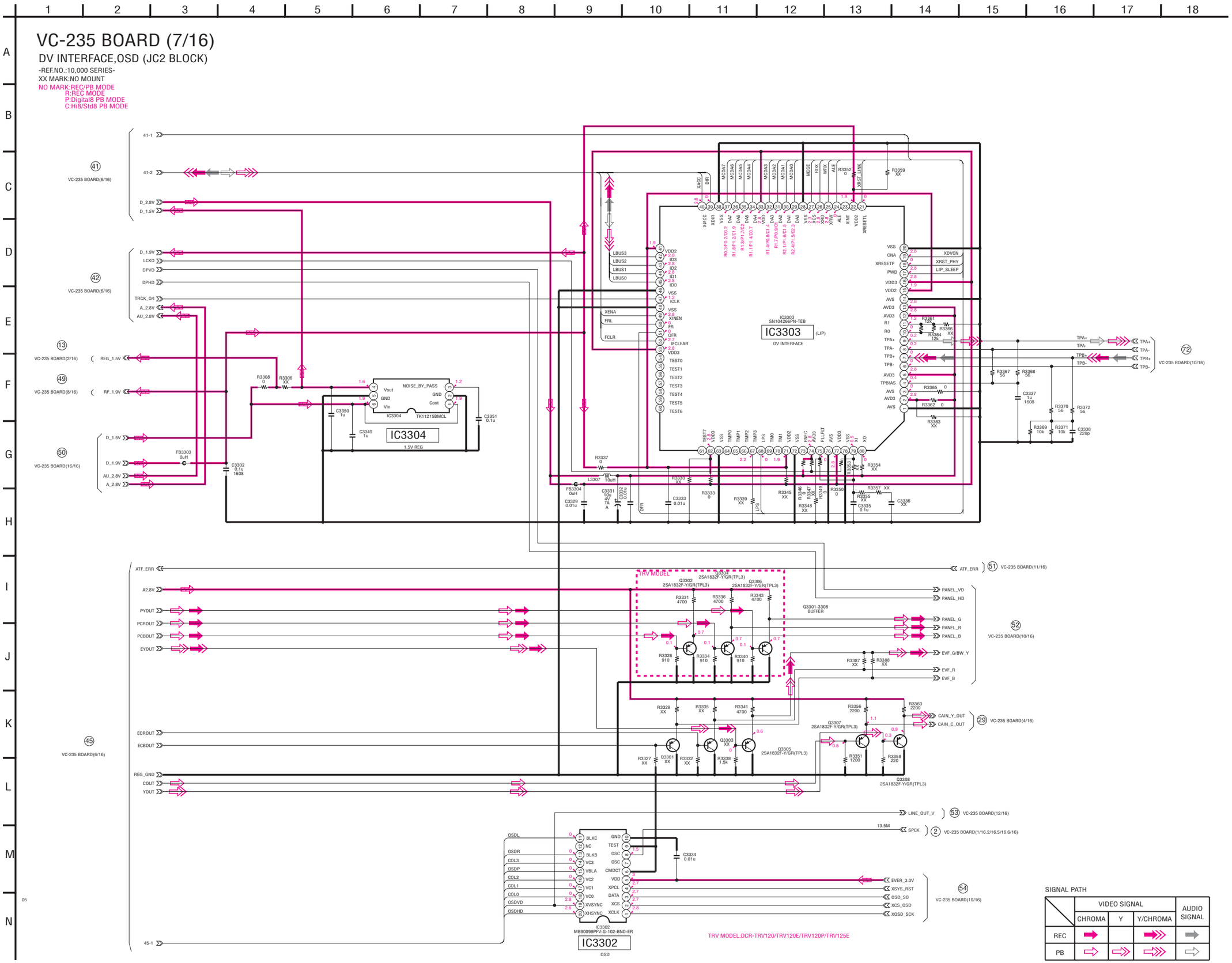

DV INTERFACE, OSD
VC-235 (7/16)

VC-235 (A/D CONVERTER, REC/PB AMP) SCHEMATIC DIAGRAM • See page 4-11 for VC-235 printed wiring board. • See page 4-88 for waveforms.

VC-235 BOARD (8/16)

A/D CONVERTER,REC/PB AMP (RFD BLOCK)

-REF.NO.:10,000 SERIES-
XX MARK:NO MOUNT

NO MARK:REC/PB MODE
R:REC MODE
P:Digital8 PB MODE
C:Hi8/Std8 PB MODE

IC3101 (TRF) EQ,PLL,A/D CONVERTER IC3101 CXA2071R-T4

IC3102 TC7S86FU(TE85R) GATE

IC3103 (TRW) REC/PB AMP IC3103 CXA2072R-T4

Q3102 2SA1832F-Y/GR(TPL3) LIMITTER

Q3103 RN1104F(TPL3) SWITCH

Q3104 2SC4738F-Y/GR(TPL3) ERASE HEAD ON SWITCH

Q3105 RN1104F(TPL3) SWITCH

Q3106 RN1104F(TPL3) SWITCH

Q3107,3109,3110,3112-3115 Hi8/Std8 PB ON SWITCH

Q3108 2SA1832F-Y/GR(TPL3)

Q3111 2SA1832F-Y/GR(TPL3) ERASE CURRENT SWITCH

Q3116 2SA1965-S-TL

Q3108,3116 ERASE HEAD OSC

MECHA DECK(1/2)
B700 MECHANISM

SIGNAL PATH

	VIDEO SIGNAL Y/CHROMA	AUDIO SIGNAL
REC	⇒	→
PB	⇨	→

	REC	PB
Ref.signal	▶	▷

VC-235 (Hi8/Std8 PB AMP) SCHEMATIC DIAGRAM • See page 4-11 for VC-235 printed wiring board. • See page 4-88 for waveforms.

VC-235 BOARD (9/16)

Hi8/Std8 PB AMP (RF8 BLOCK)

-REF.NO.:10,000 SERIES-
XX MARK:NO MOUNT
NO MARK:REC/PB MODE
R:REC MODE
P:Digital8 PB MODE
C:Hi8/Std8 PB MODE

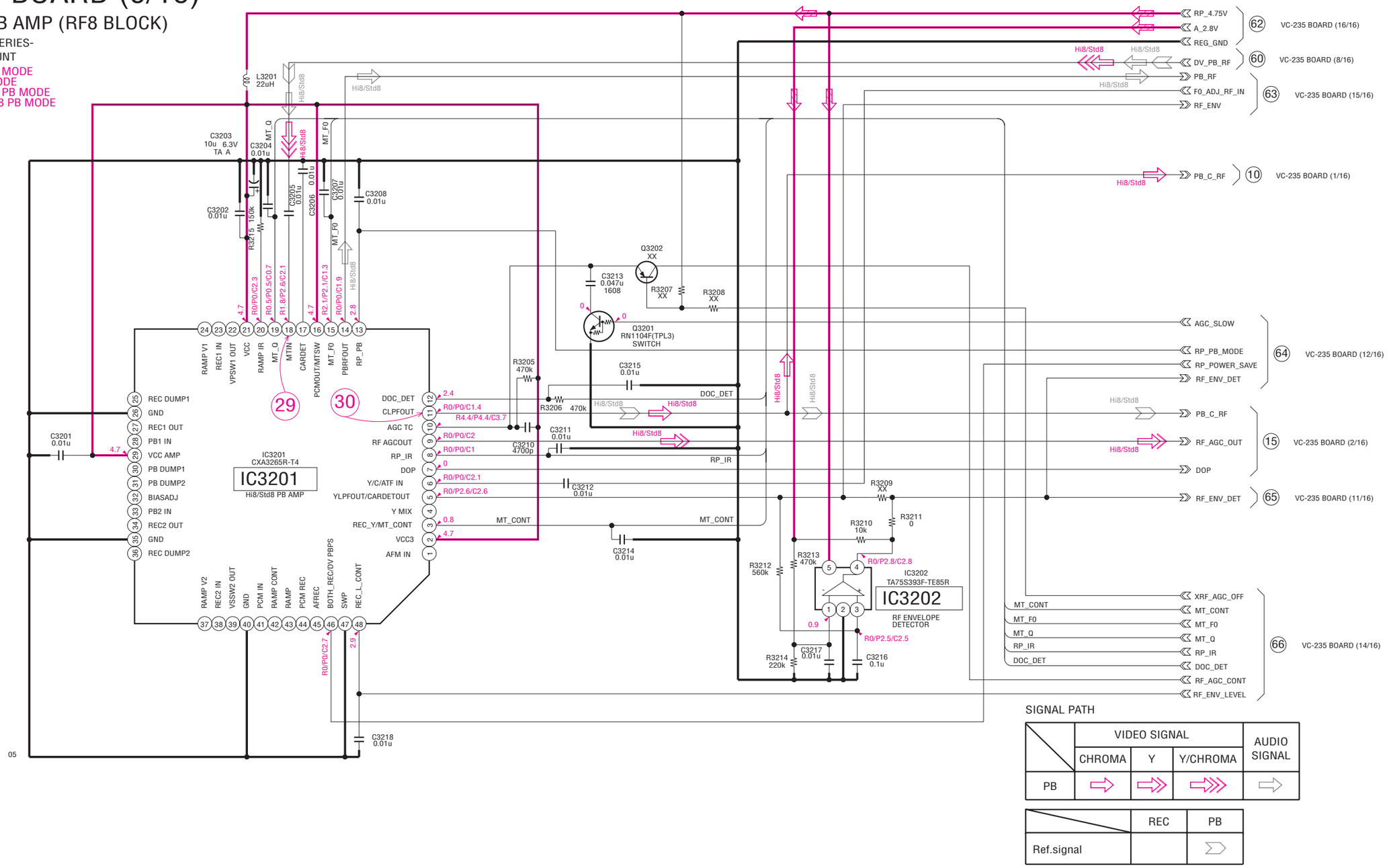

SIGNAL PATH

	VIDEO SIGNAL			AUDIO SIGNAL
	CHROMA	Y	Y/CHROMA	
PB	⇨	⇨	⇨	⇨

	REC	PB
Ref.signal		⇨

VC-235 (HI CONTROL) SCHEMATIC DIAGRAM

• See page 4-11 for VC-235 printed wiring board. • See page 4-88 for waveforms.

VC-235 BOARD (10/16)

HI CONTROL(HI BLOCK)

-REF.NO.:10,000 SERIES-
XX MARK:NO MOUNT
NO MARK:REC/PB MODE
R:REC MODE
P:Digital8 PB MODE
C:Hi8/Std8 PB MODE

TRV MODEL:DCR-TRV120/TRV120E/TRV120P/TRV125E
TR MODEL:DCR-TR8000E/TR8100E

IC4802 LANC IN/OUT

IC4801 INITIAL RESET BACK UP VDD

IC4803 HI CONTROL

INTELLIGENT ACCESSORY SHOE

SIGNAL PATH

	VIDEO SIGNAL			AUDIO SIGNAL
	CHROMA	Y	Y/CHROMA	
REC	➡	➡	➡	➡
PB	⇨	⇨	⇨	⇨

VC-235 (Digital8 MECHANISM CONTROL) SCHEMATIC DIAGRAM • See page 4-11 for VC-235 printed wiring board. • See page 4-88 for waveforms.

VC-235 BOARD (11/16)

Digital8 MECHANISM CONTROL (MC BLOCK)

-REF.NO.:10,000 SERIES-
XX MARK:NO MOUNT

NO MARK:REC/PB MODE
R:REC MODE
P:Digital8 PB MODE
C:Hi8/Std8 PB MODE
*:IMPOSSIBLE TO MEASURE THE VOLTAGE AT THE MARKED POINTS.

NTSC MODEL:DCR-TRV120/TRV120P
PAL MODEL:DCR-TRV120E/TRV125E/TR8000E/TR8100E

IC4501
MB91192PFF-G-109-BND-ER
IC4501
Digital8 MECHANISM CONTROL

IC4502
EEP ROM
IC4502
AK6417AM-E2 :NTSC MODEL
BR9016RFV-E2 :PAL MODEL

SIGNAL PATH

	REC	REC/PB	PB
Drum speed servo		▶	
Drum phase servo		▶	
Drum servo(speed and phase)		▶	
Capstan speed servo		▶	
Capstan servo(speed and phase)		▶	

VC-235 (CAMERA CONTROL, Hi8/Std8 MECHANISM CONTROL) SCHEMATIC DIAGRAM

• See page 4-11 for VC-235 printed wiring board. • See page 4-88 for waveforms.

VC-235 BOARD (12/16)

CAMERA CONTROL,
Hi8/Std8 MECHANISM CONTROL
(VC BLOCK)

-REF.NO.:10,000 SERIES-
XX MARK:NO MOUNT

NO MARK:REC/PB MODE
R:REC MODE
P:Digital8 PB MODE
C:Hi8/Std8 PB MODE

*:IMPOSSIBLE TO MEASURE THE VOLTAGE AT THE MARKED POINTS.

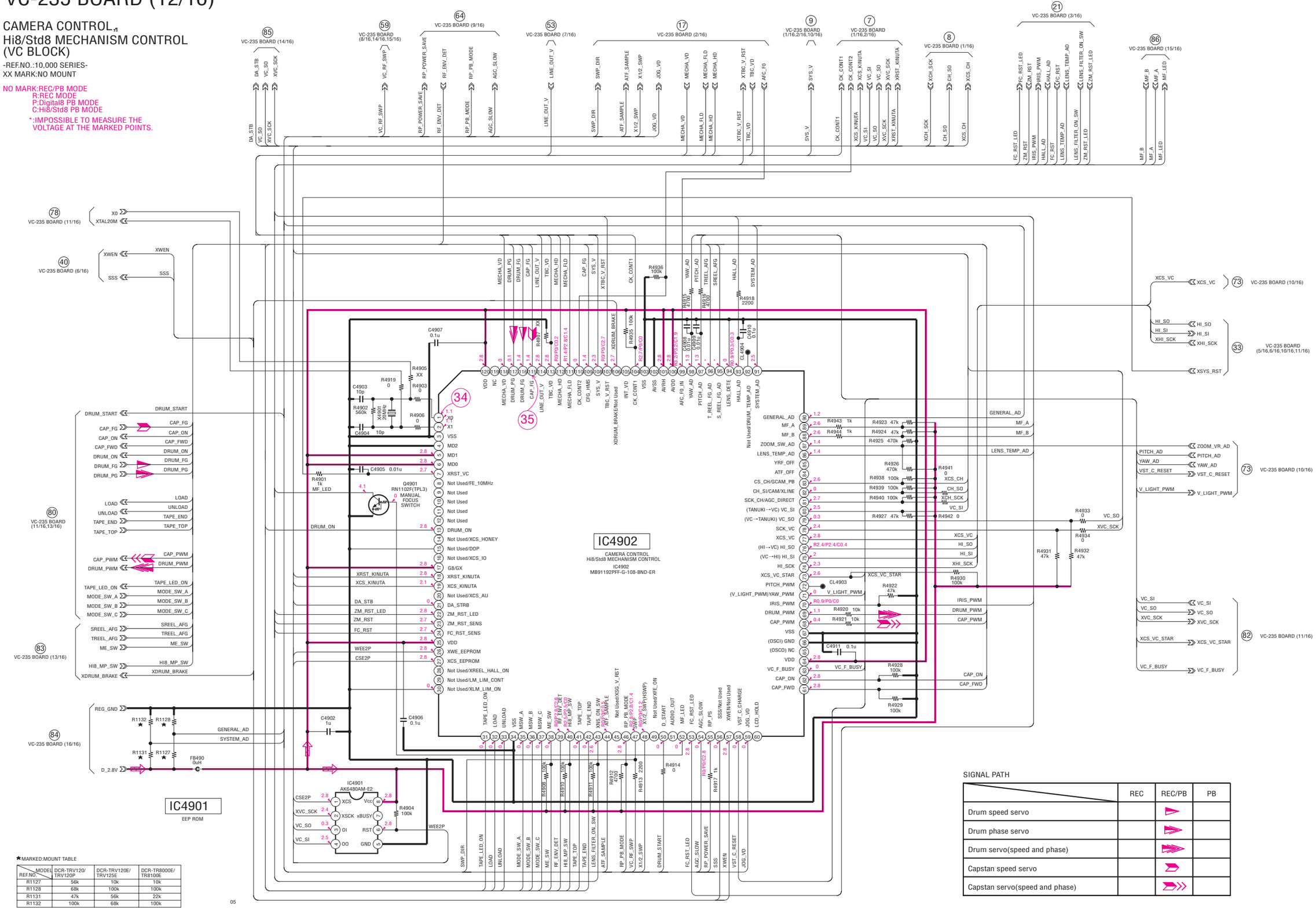

★MARKED:MOUNT TABLE

REF.NO. \ MODEL	DCR-TRV120/ TRV120P	DCR-TRV120E/ TRV125E	DCR-TR8000E/ TR8100E
R1127	56k	10k	10k
R1128	68k	100k	100k
R1131	47k	56k	22k
R1132	100k	68k	100k

FP-38, FP-220, FP-221, FP-249, FP-355, FP-356 (MECHA DECK), VC-235 (SERVO) SCHEMATIC DIAGRAM • See page 4-11 for VC-235 printed wiring board. • See page 4-88, 89 for waveforms.

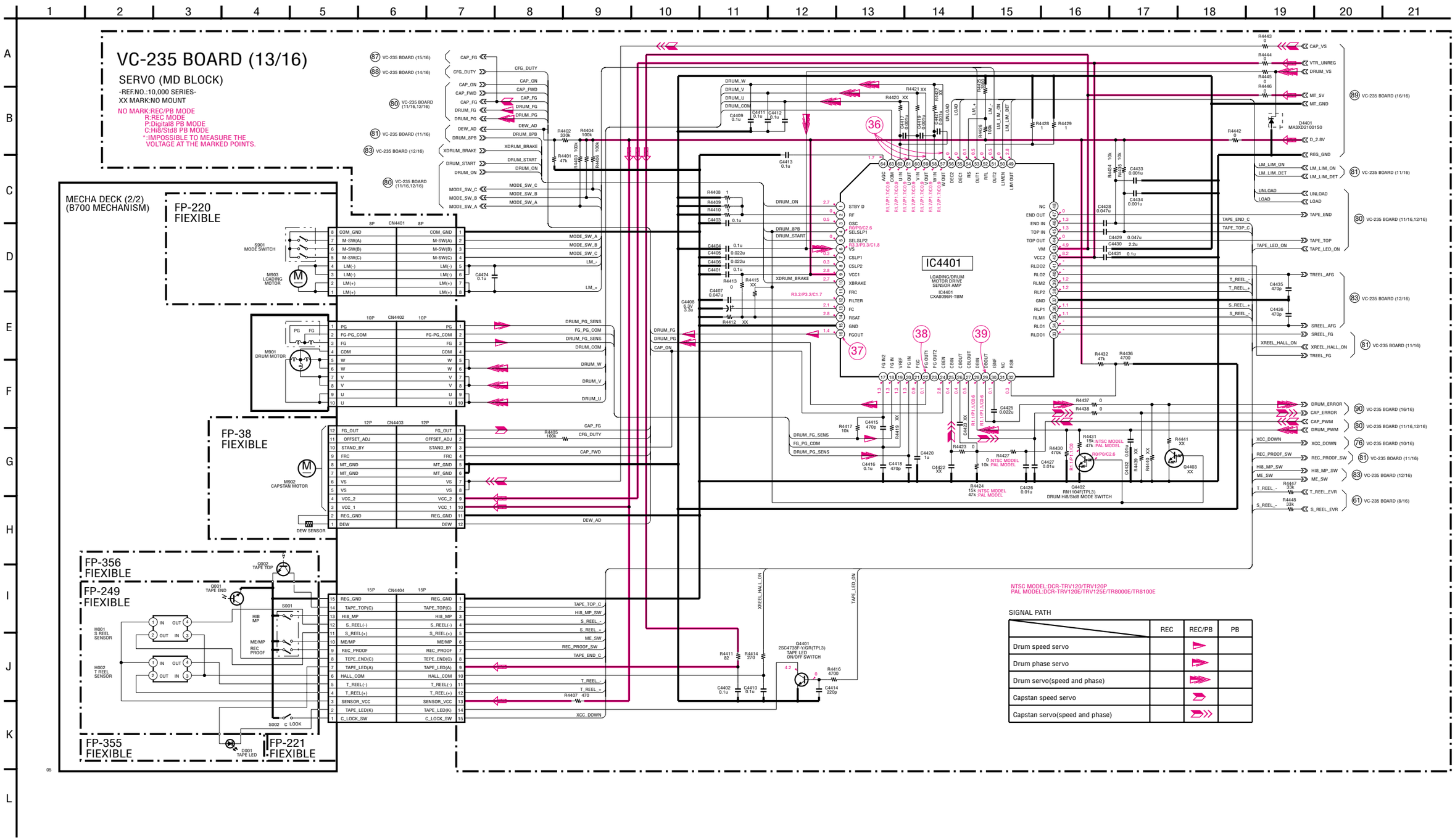

FP-249, FP-355, FP-356 (MECHA DECK) PRINTED WIRING BOARDS AND VC-235 (D/A CONVERTER) SCHEMATIC DIAGRAM • See page 4-11 for VC-235 printed wiring board.

– Ref. No.: FP-249, FP-355, FP-356 flexible board; 10,000 series –

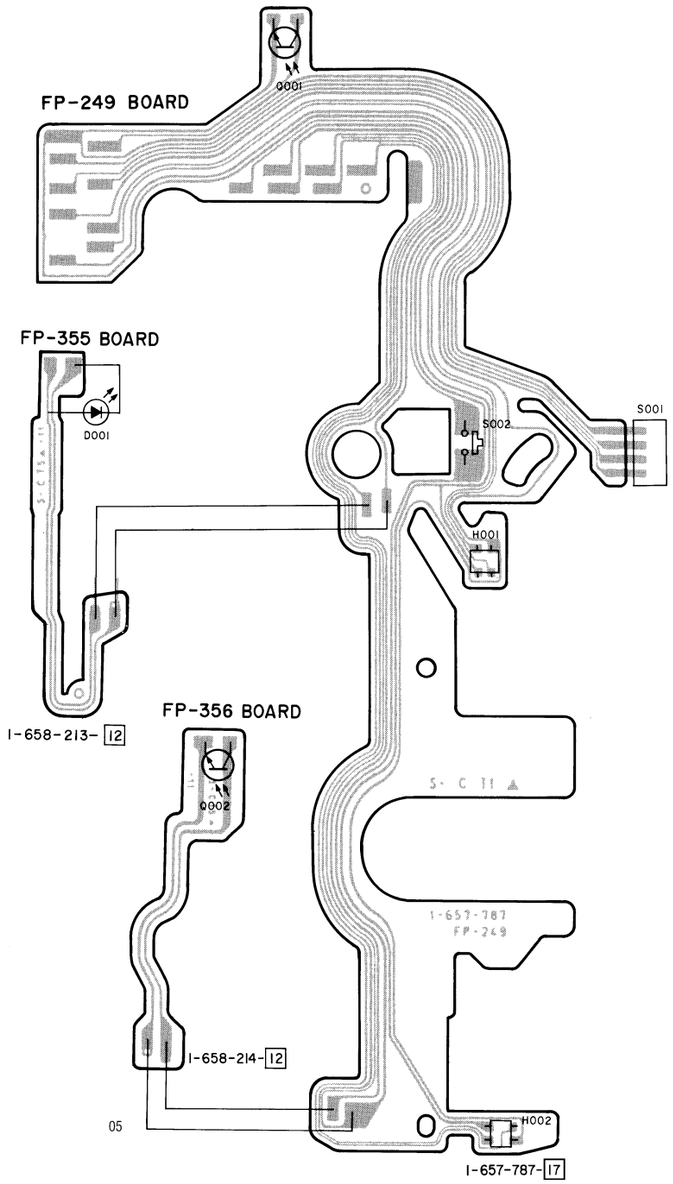

VC-235 BOARD (14/16)

D/A CONVERTER (EVR BLOCK)

-REF.NO.:10,000 SERIES-
XX MARK:NO MOUNT
NO MARK:REC/PB MODE
R:REC MODE
P:Digital8 PB MODE
C:Hi8/Std8 PB MODE

NTSC MODEL:DCR-TRV120/TRV120P
PAL MODEL:DCR-TRV120E/TRV125E/TR8000E/TR8100E

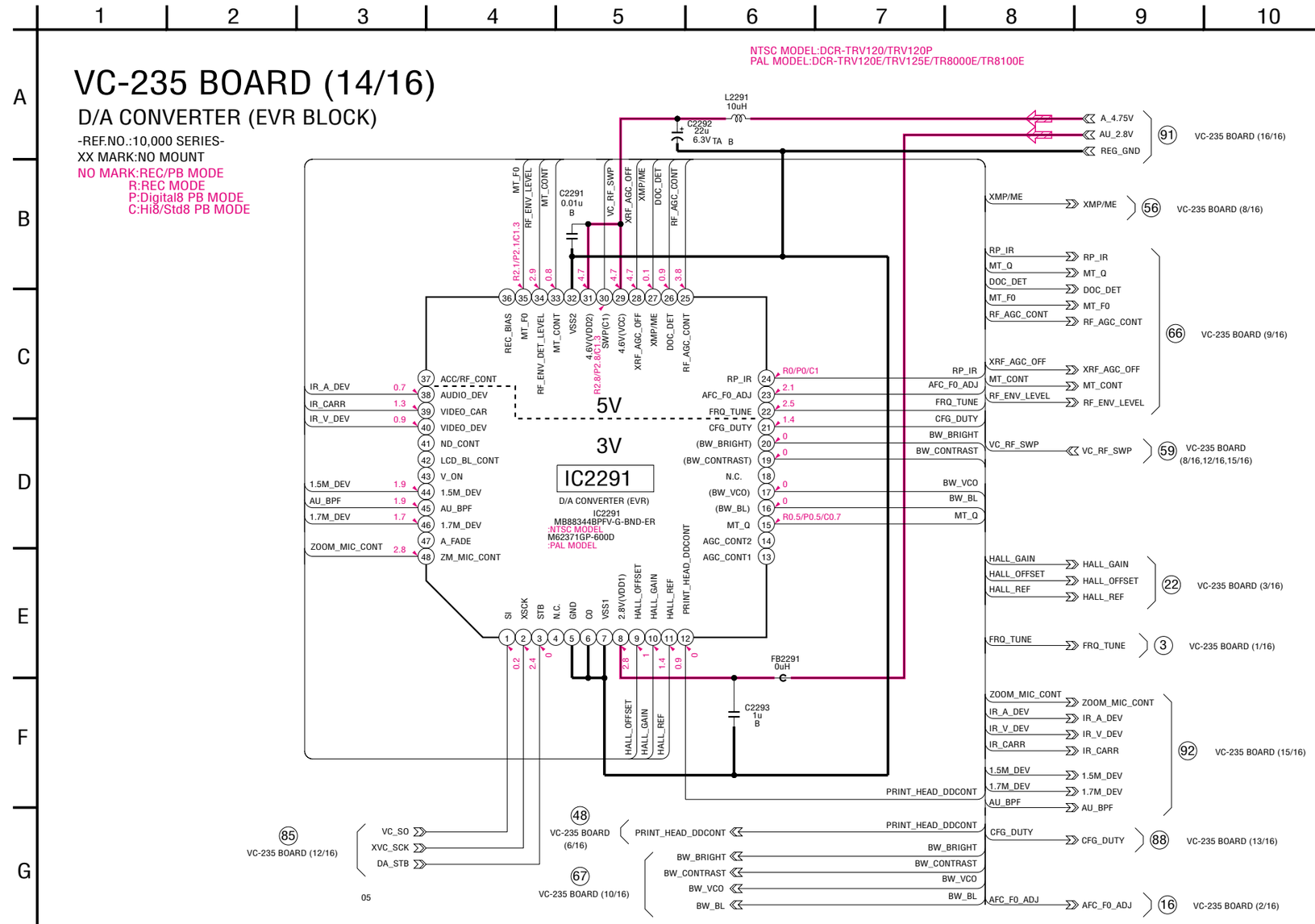

VC-235 (AUDIO IN/OUT) SCHEMATIC DIAGRAM • See page 4-11 for VC-235 printed wiring board.

VC-235 BOARD (15/16)

AUDIO IN/OUT (AU BLOCK)

-REF.NO.:10,000 SERIES-
XX MARK:NO MOUNT

NO MARK:REC/PB MODE
R:REC MODE
P:Digital8 PB MODE
C:Hi8/Std8 PB MODE

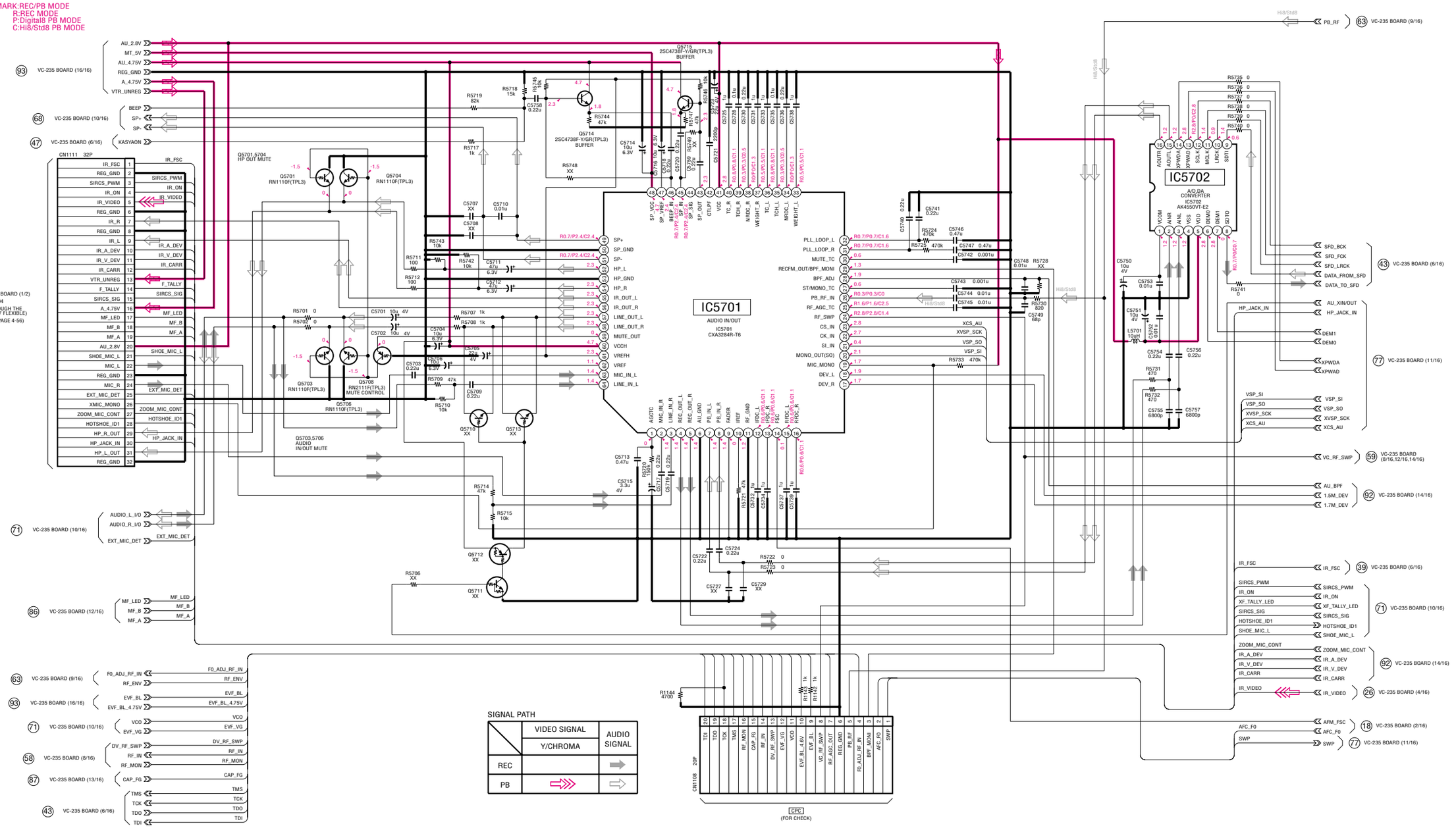

VC-235 (DC/DC CONVERTER) SCHEMATIC DIAGRAM • See page 4-11 for VC-235 printed wiring board. • See page 4-89 for waveforms.

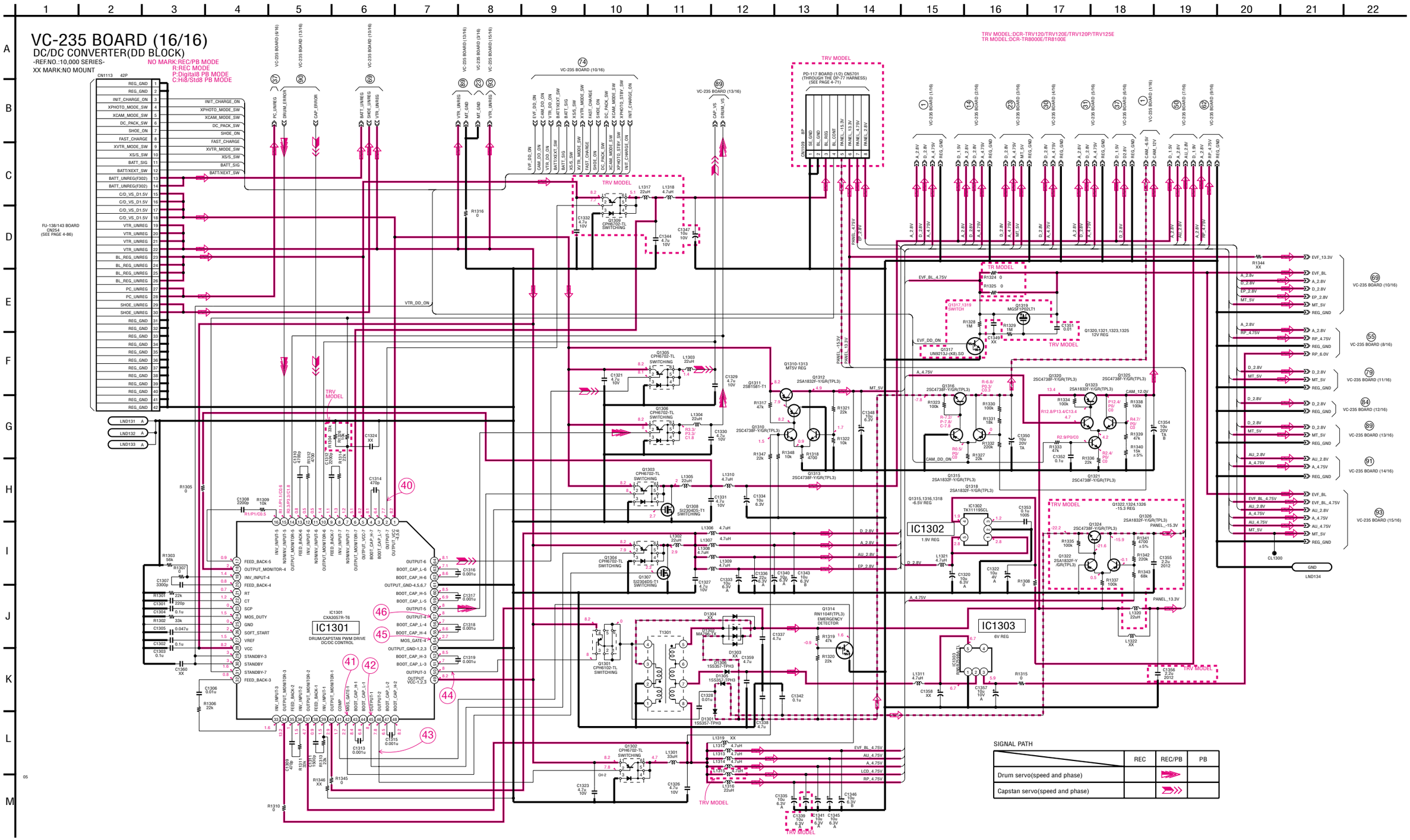

SE-104/113 (STEADY SHOT, AV IN/OUT) PRINTED WIRING BOARD
– Ref. No.: SE-104/113 board; 20,000 series –

- **For Printed Wiring Board.**
- There are few cases that the part isn't mounted in this model is printed on this diagram.
- See page 4-92 for printed parts location.

SE-104/113 BOARD (SIDE A)

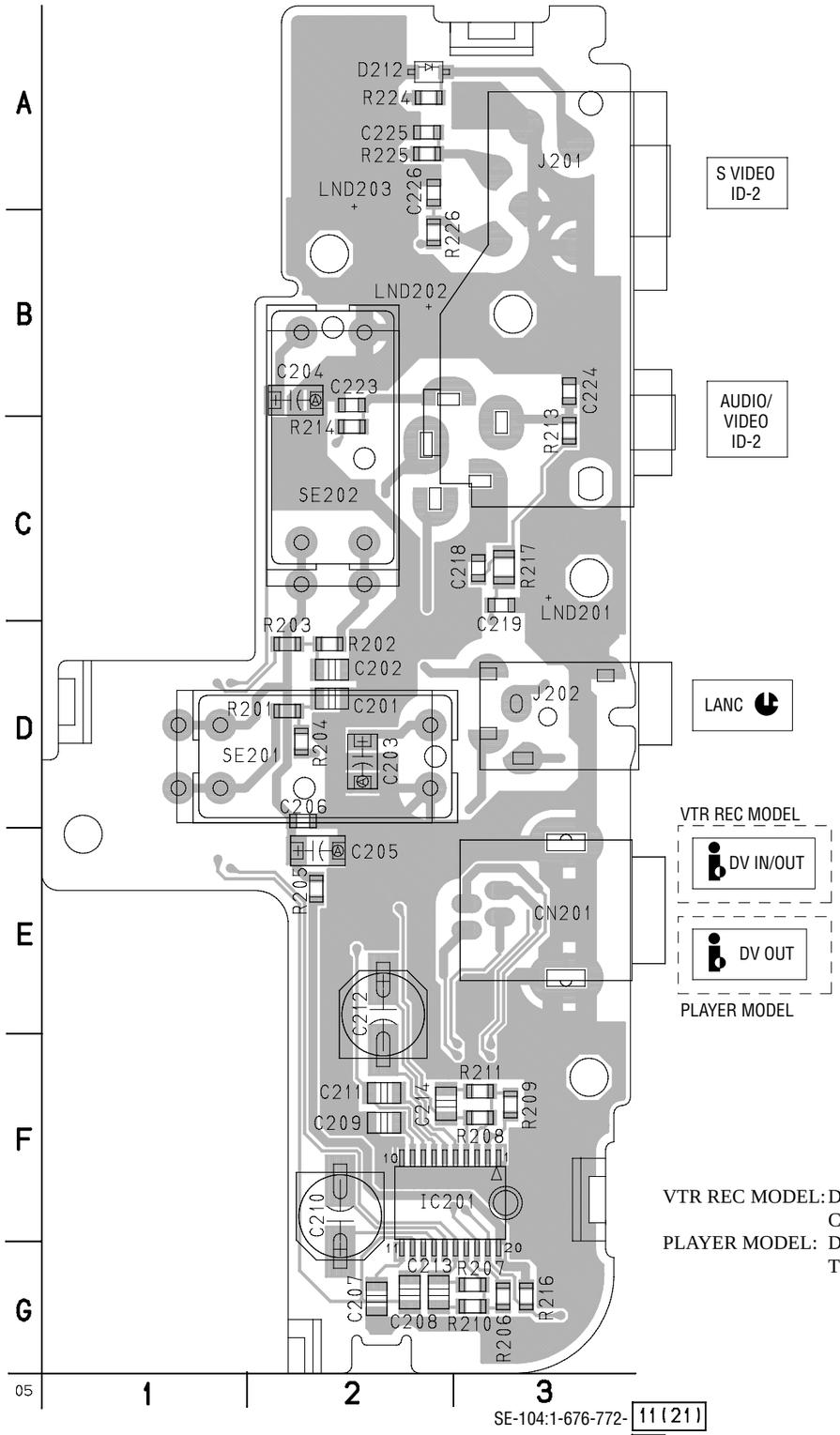

VTR REC MODEL: DCR-TRV120/TRV120E: E, HK, AUS, CN, JE/TRV120P
PLAYER MODEL: DCR-TRV120E: AEP, UK, EE, NE, RU/ TRV125E/TR8000E/TR8100E

SE-104:1-676-772-11(21)
SE-113:1-676-753-11

SE-104/113 BOARD (SIDE B)

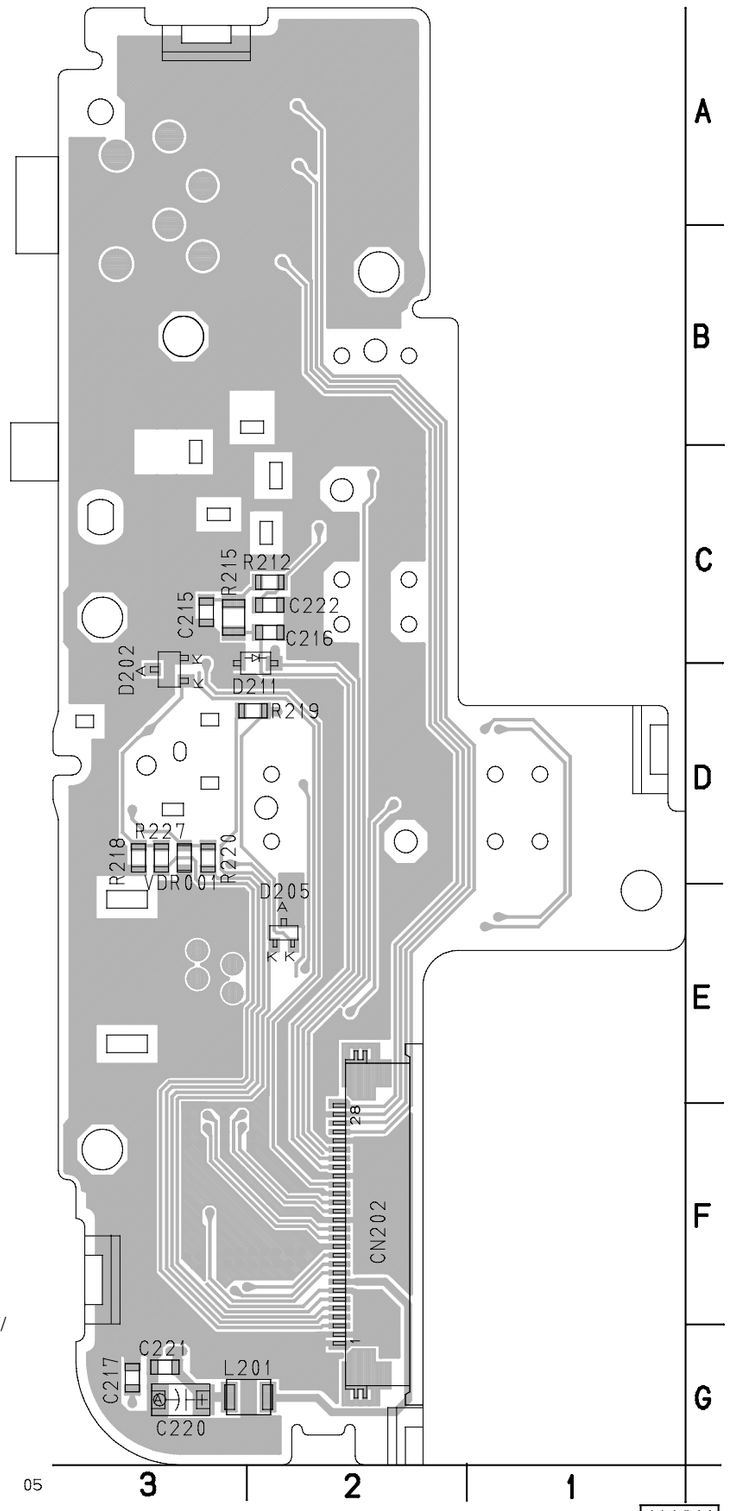

SE-104:1-676-772-11(21)
SE-113:1-676-753-11

SE-104/113 (STEADY SHOT, AV IN/OUT) SCHEMATIC DIAGRAM

SE-104 BOARD (DCR-TRV120/TRV120E/TRV120P/TRV125E)
SE-113 BOARD (DCR-TR8000E/TR8100E)

STEADY SHOT,AV IN/OUT
-REF.NO.:20,000 SERIES-
XX MARK:NO MOUNT
NO MARK:REC/PB MODE

VTR REC MODEL:DCR-TRV120/TRV120E:E,HK,AUS,CN,JE/TRV120P
PLAYER MODEL:DCR-TRV120E:AEP,UK,EE,NE,RU/TRV125E/TR8000E/TR8100E

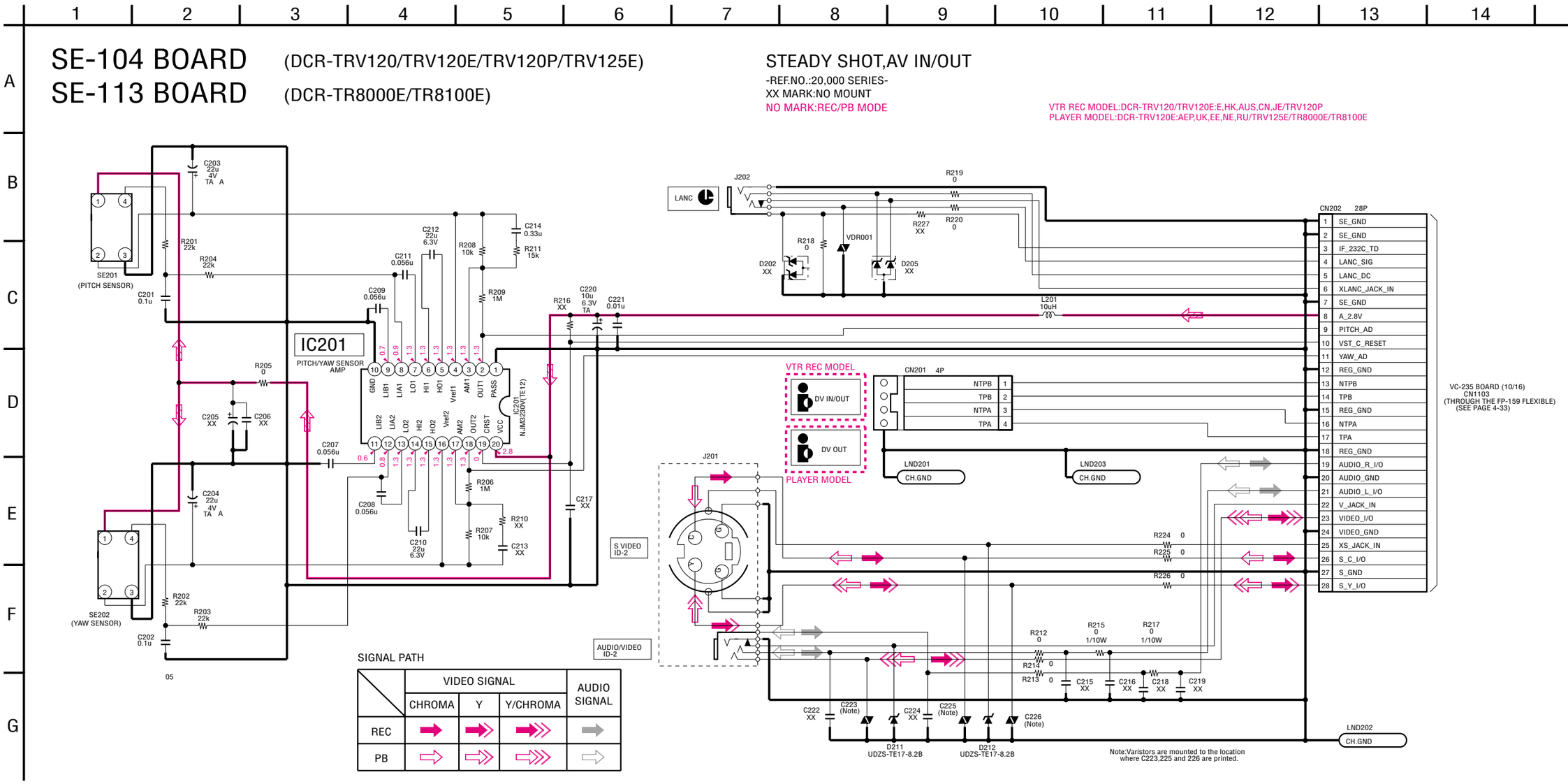

CN202	
1	SE_GND
2	SE_GND
3	IF_232C_TD
4	LANC_SIG
5	LANC_DC
6	XLANC_JACK_IN
7	SE_GND
8	A_2.8V
9	PITCH_AD
10	VST_C_RESET
11	YAW_AD
12	REG_GND
13	NTPB
14	TPB
15	REG_GND
16	NTPA
17	TPA
18	REG_GND
19	AUDIO_R_I/O
20	AUDIO_GND
21	AUDIO_L_I/O
22	V_JACK_IN
23	VIDEO_I/O
24	VIDEO_GND
25	XS_JACK_IN
26	S_C_I/O
27	S_GND
28	S_Y_I/O

CN201	
NTPB	1
TPB	2
NTPA	3
TPA	4

SIGNAL PATH

	VIDEO SIGNAL			AUDIO SIGNAL
	CHROMA	Y	Y/CHROMA	
REC	➡	➡	➡	➡
PB	⇨	⇨	⇨	⇨

FP-156 (MIC/HP JACK, MF SENSOR), MI-37 (STEREO MIC AMP, IR TRANSMITTER) PRINTED WIRING BOARDS

– Ref. No.: FP-156 flexible board; 10,000/MI-37 board; 10,000 series –

- **For Printed Wiring Board.**
- MI-37 board is eight-layer print board. However, the patterns of layers 2 to 7 have not been included in the diagram.
- There are few cases that the part isn't mounted in this model is printed on this diagram.
- See page 4-92 for printed parts location.
- Chip transistor

MI-37 BOARD (SIDE A)

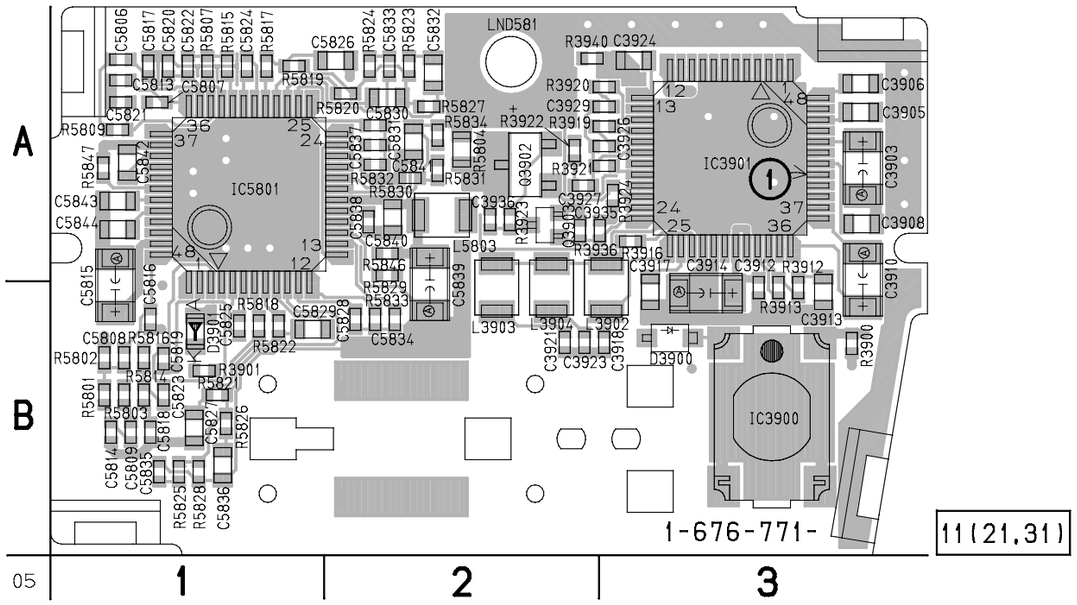

MI-37 BOARD (SIDE B)

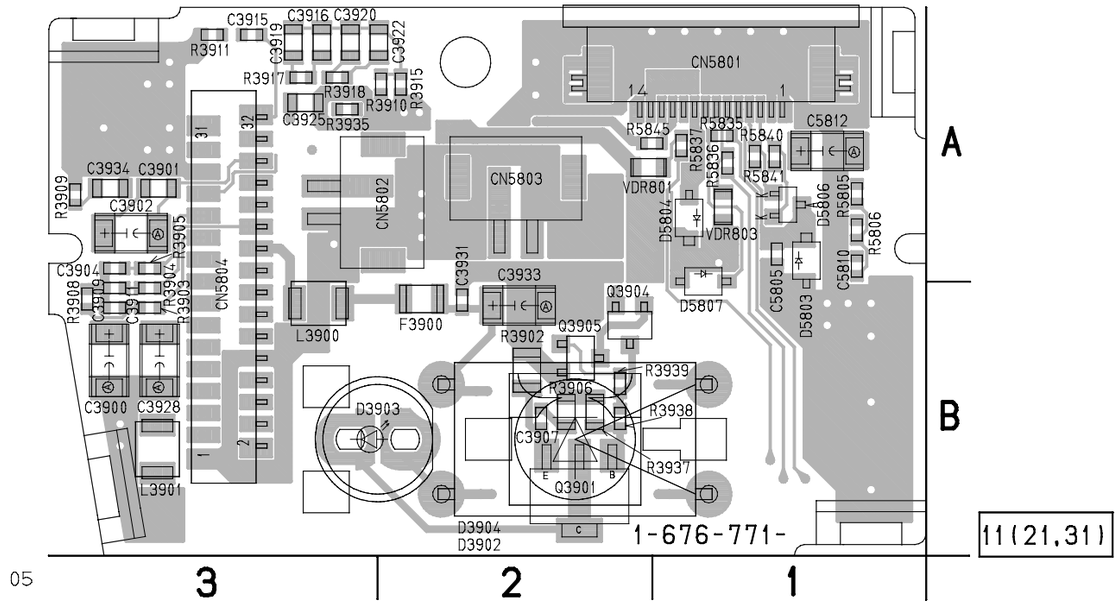

FP-156 FLEXIBLE BOARD

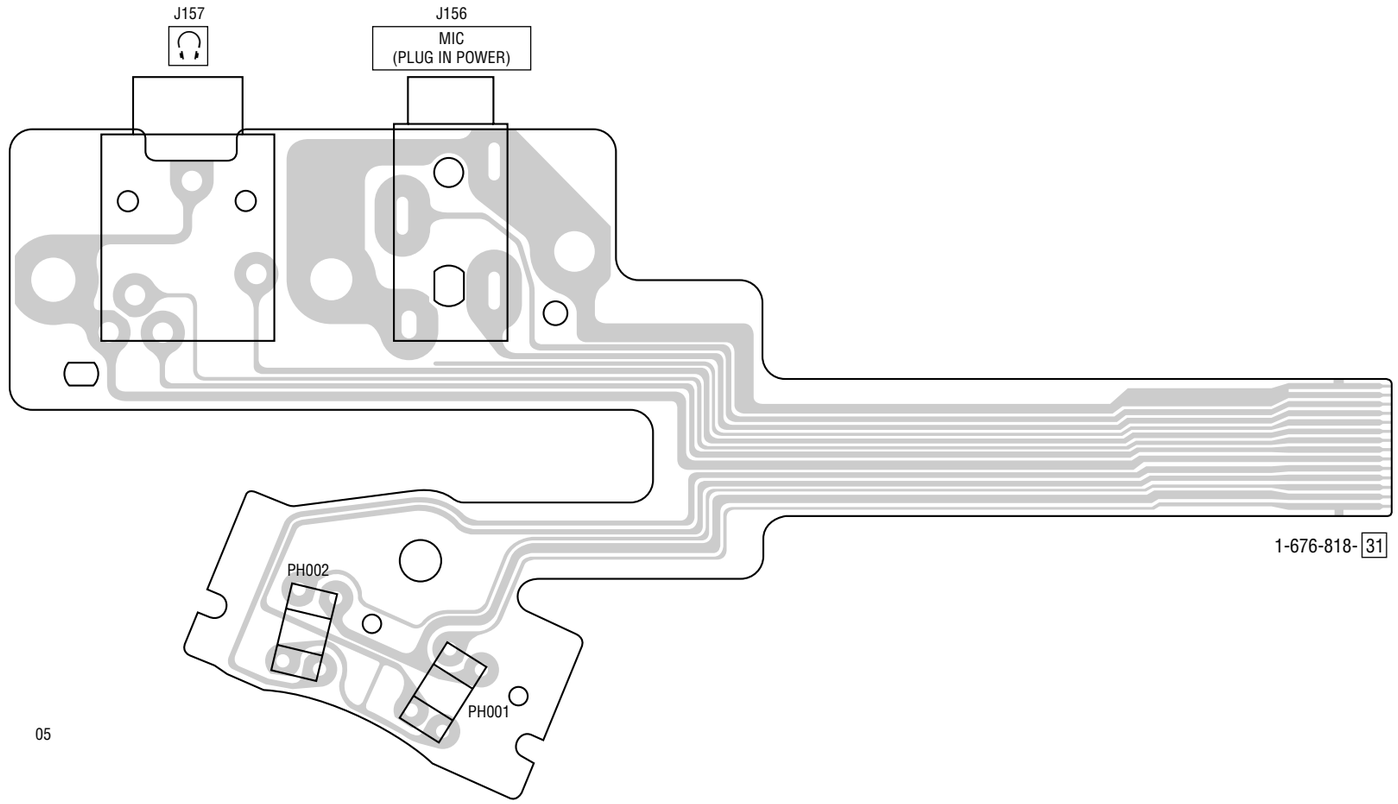

FP-156 (MIC/HP JACK, MF SENSOR), MI-37 (STEREO MIC AMP) SCHEMATIC DIAGRAM

• See page 4-51 for FP-156 and MI-37 printed wiring boards.

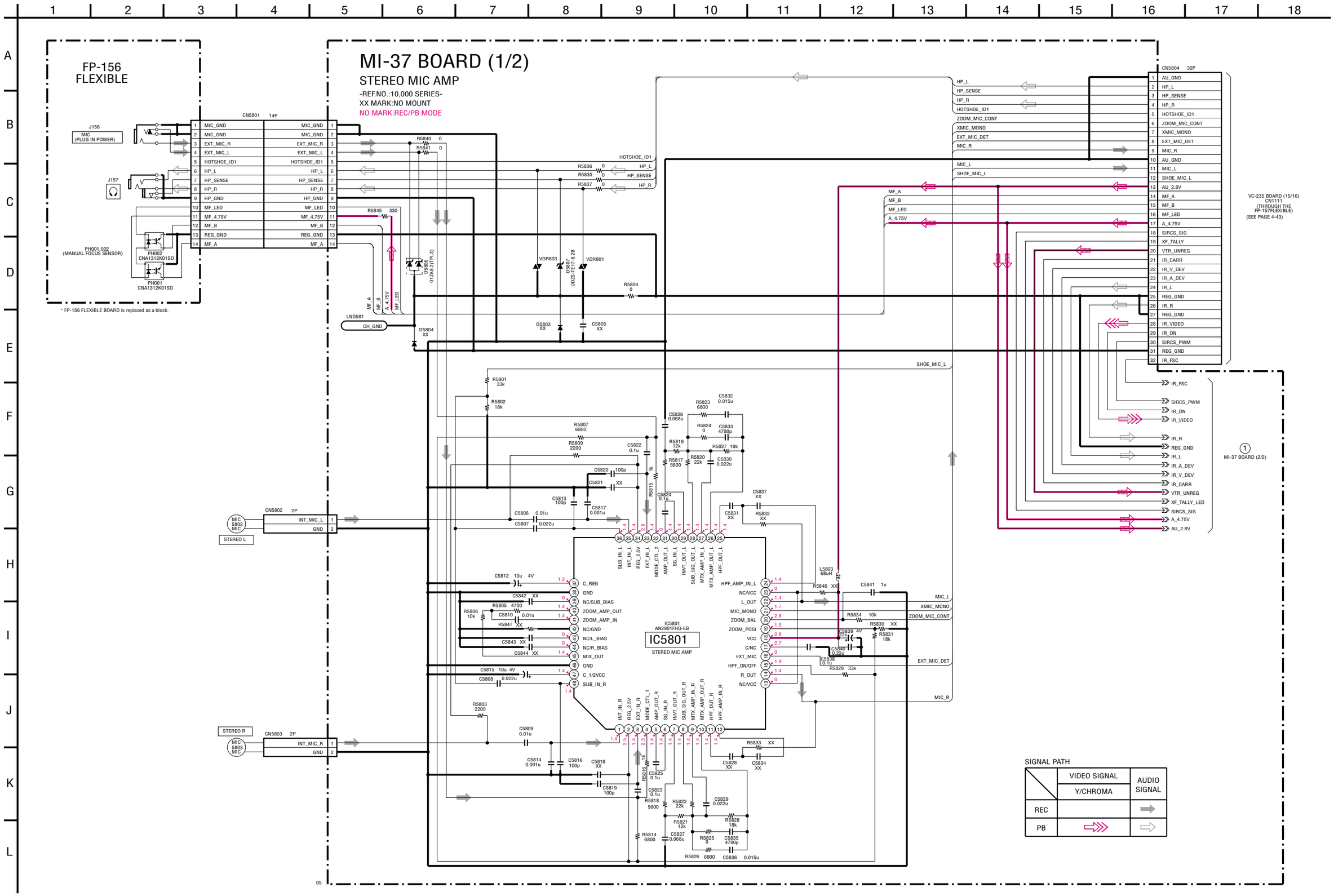

MI-37 (IR TRANSMITTER) SCHEMATIC DIAGRAM • See page 4-51 for MI-37 printed wiring board. • See page 4-89 for waveform.

MI-37 BOARD (2/2)

IR TRANSMITTER

-REF.NO.:10,000 SERIES-
XX MARK:NO MOUNT

NO MARK:REC/PB MODE (IR ON)

NTSC MODEL:TRV120/TRV120P
PAL MODEL:TRV120E/TRV125E/TR8000E/TR8100E

SIGNAL PATH

	VIDEO SIGNAL / Y/CHROMA	AUDIO SIGNAL
PB	⇒	⇨

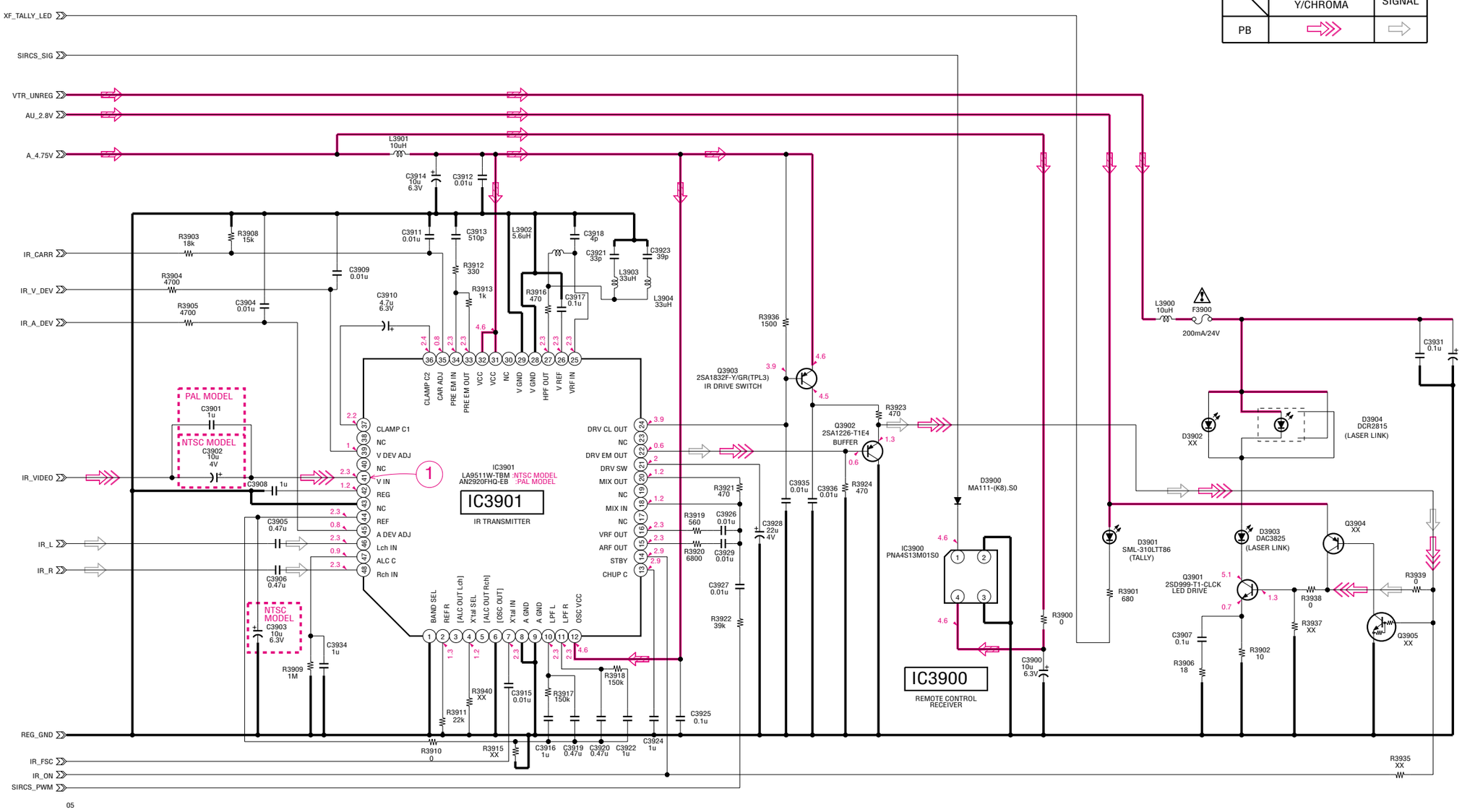

The components identified by mark ⚠ or dotted line with mark ⚠ are critical for safety. Replace only with part number specified.	Les composants identifiés par une marque ⚠ sont critiques pour la sécurité. Ne les remplacer que par une piéce portant le numéro spécifié.

CF-69 (USER CONTROL) PRINTED WIRING BOARD
– Ref. No.: CF-69 board; 20,000 series –
– DCR-TRV120/TRV120E/TRV120P/TRV125E –

- **For Printed Wiring Board.**
- There are few cases that the part isn't mounted in this model is printed on this diagram.
- See page 4-93 for printed parts location.
- Chip transistor

CF-69 BOARD (SIDE A)

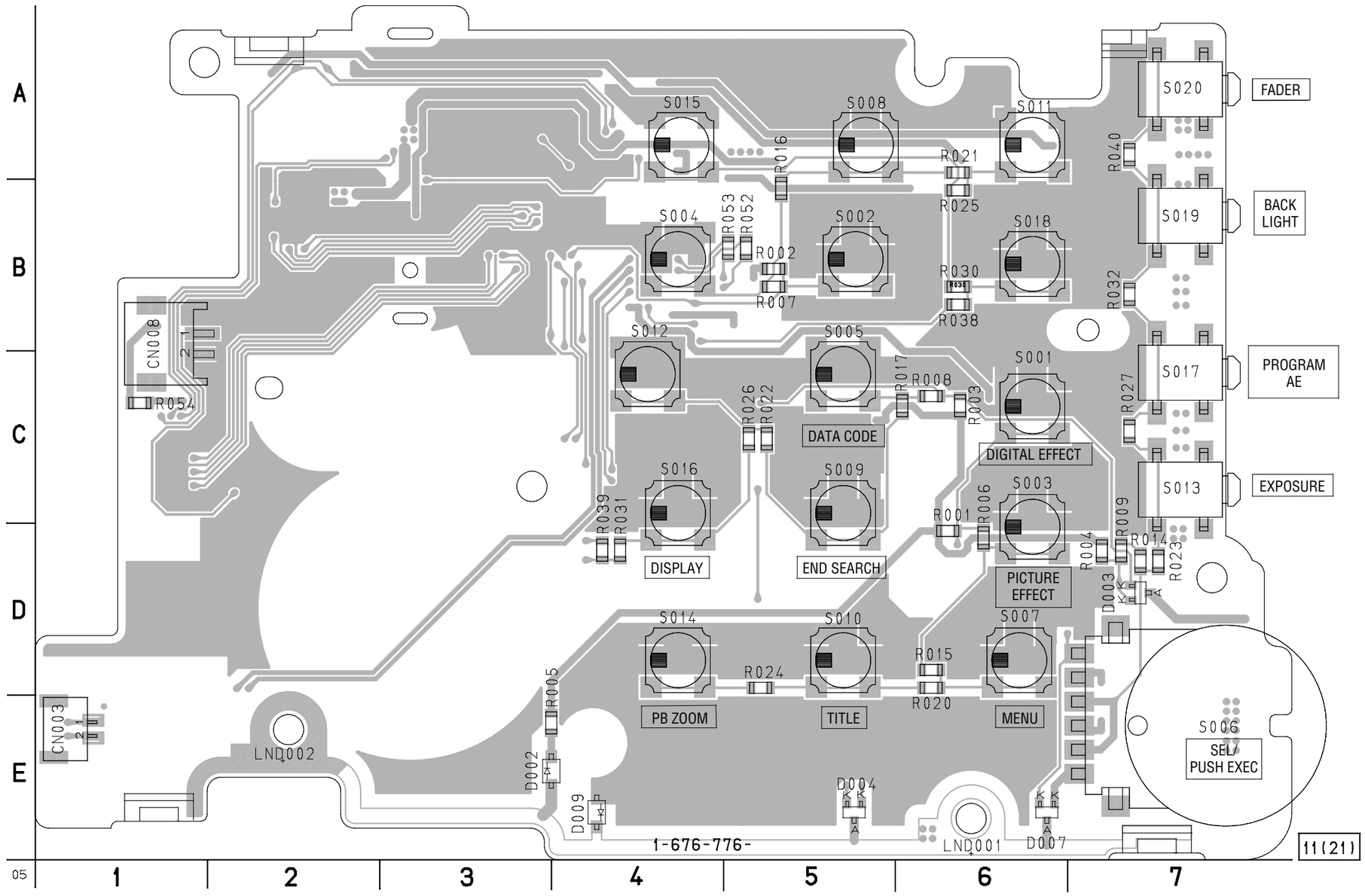

CF-69 BOARD (SIDE B)

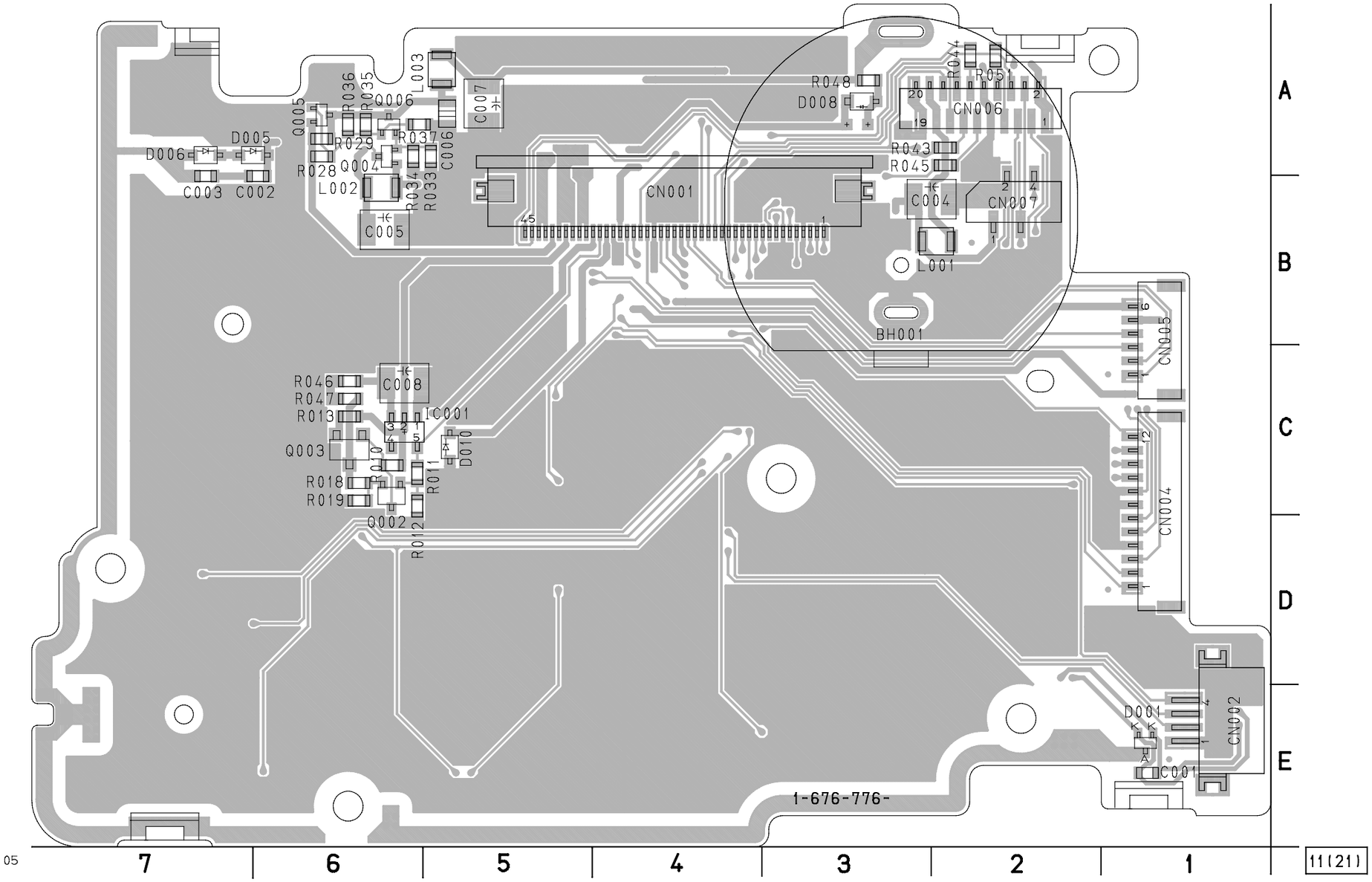

MF-10000 (CONTROL SWITCH BLOCK), CF-69 (USER CONTROL) SCHEMATIC DIAGRAM • See page 4-59 for CF-69 printed wiring boards.

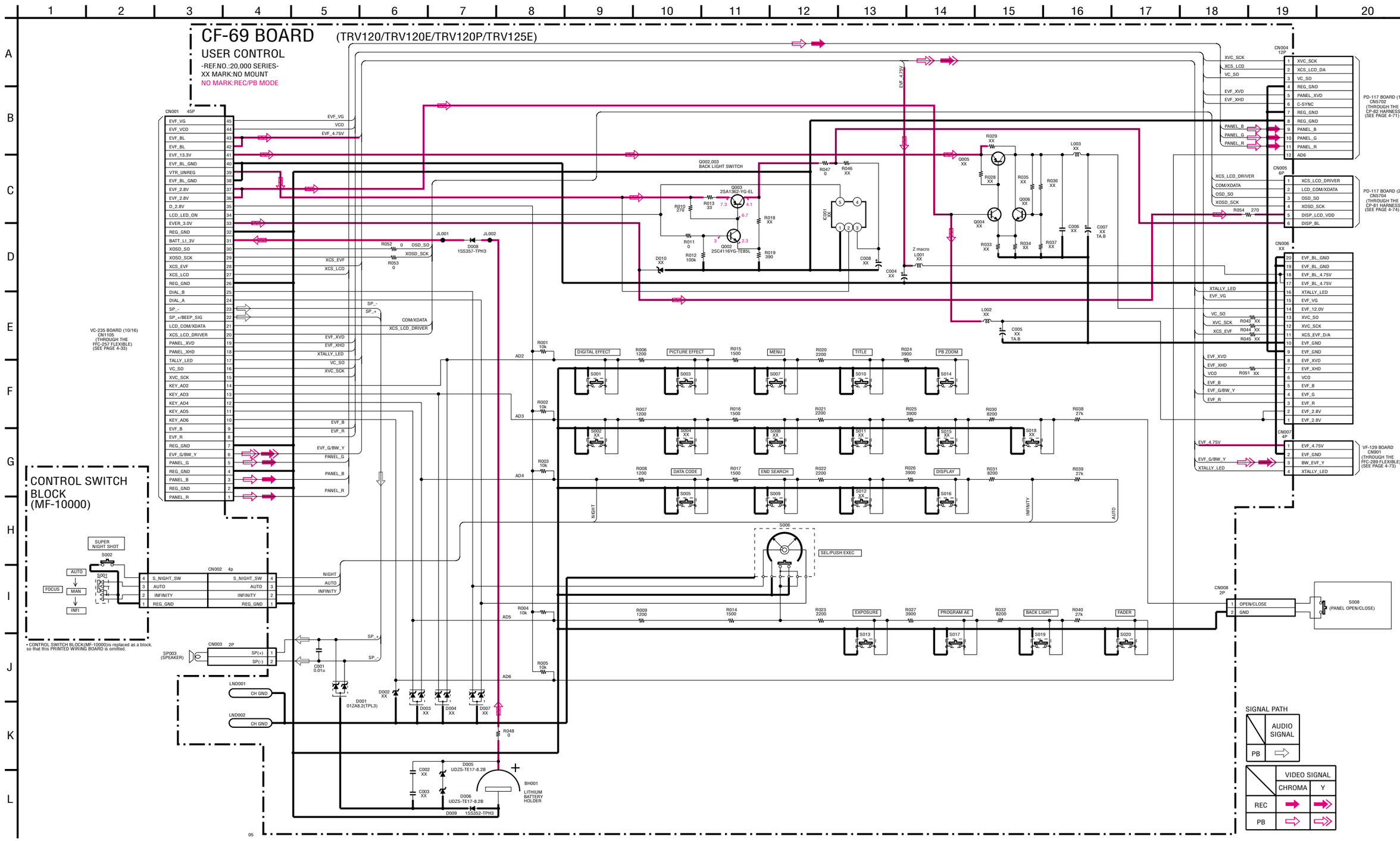

MF-10000 (CONTROL SWITCH BLOCK), CF-71 (USER CONTROL) SCHEMATIC DIAGRAM • See page 4-67 for CF-71 printed wiring board.

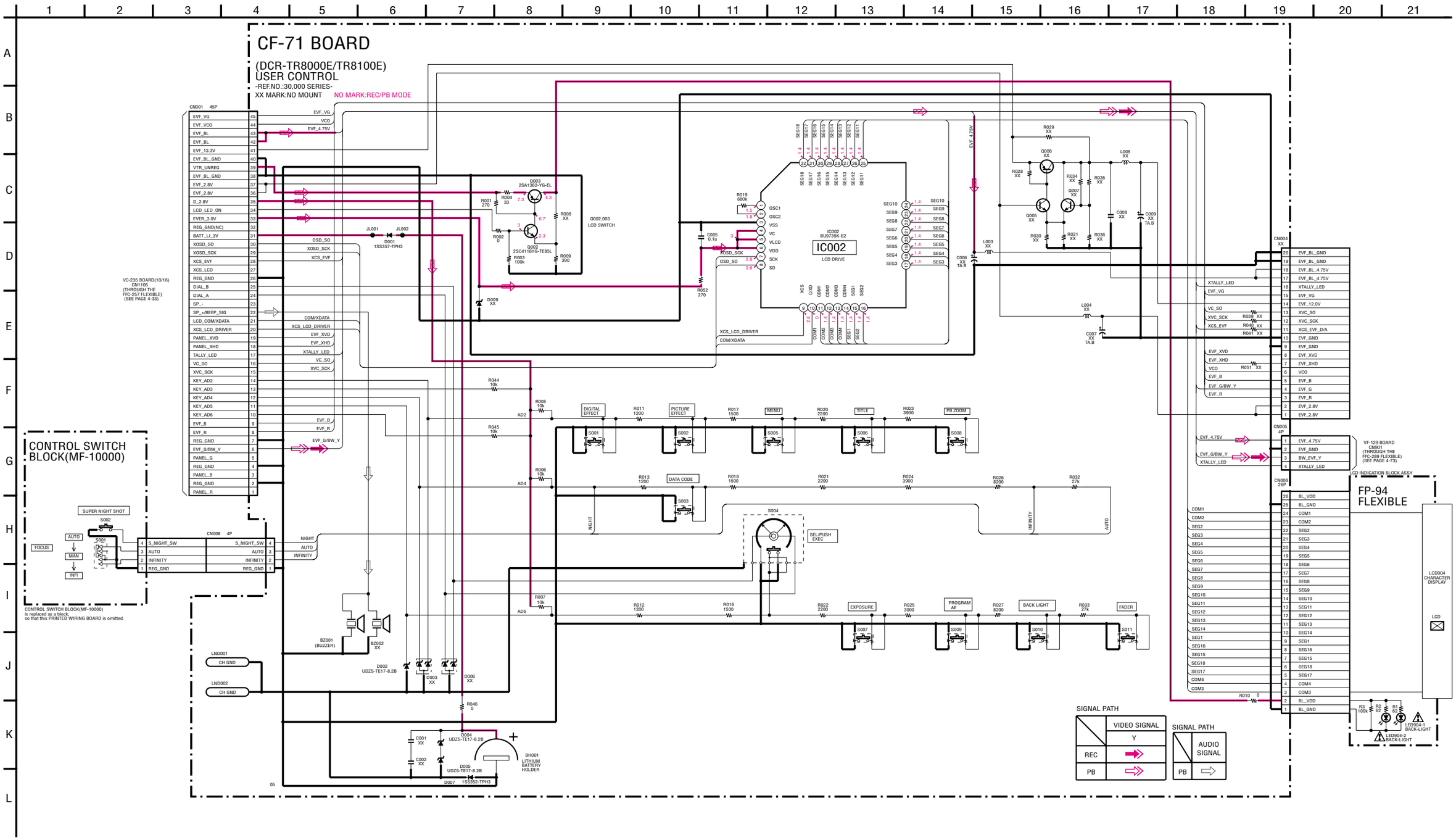

The components identified by mark ⚠ or dotted line with mark ⚠ are critical for safety. Replace only with part number specified.	Les composants identifiés par une marque ⚠ sont critiques pour la sécurité. Ne les remplacer que par une piéce portant le numéro spécifié.

CF-71 (USER CONTROL) PRINTED WIRING BOARD
– Ref. No.: CF-71 board; 30,000 series –
– DCR-TR8000E/TR8100E –

- **For Printed Wiring Board.**
- There are few cases that the part isn't mounted in this model is printed on this diagram.
- See page 4-93 for printed parts location.
- Chip transistor

CF-71 BOARD (SIDE A)

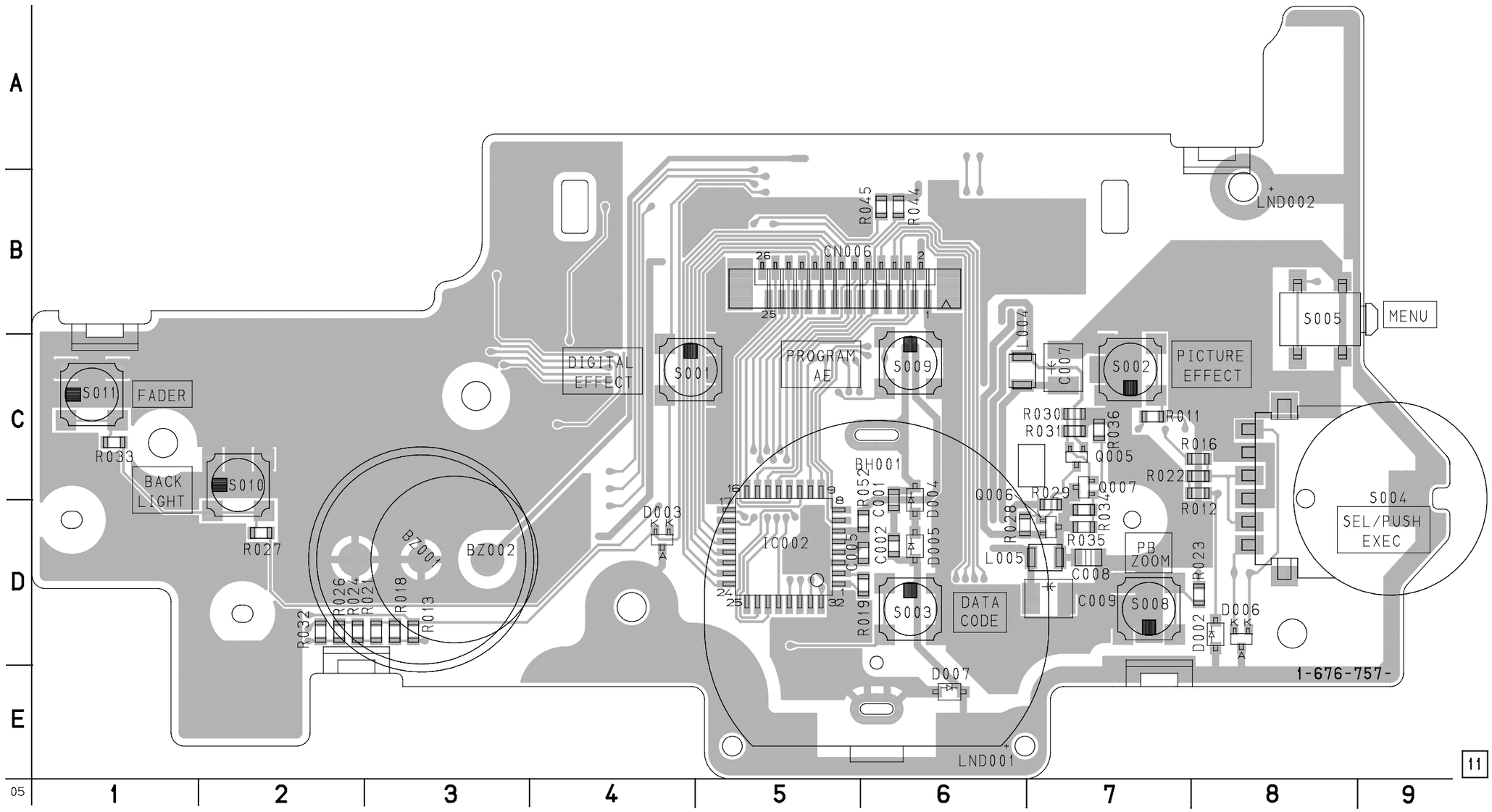

CF-71 BOARD (SIDE B)

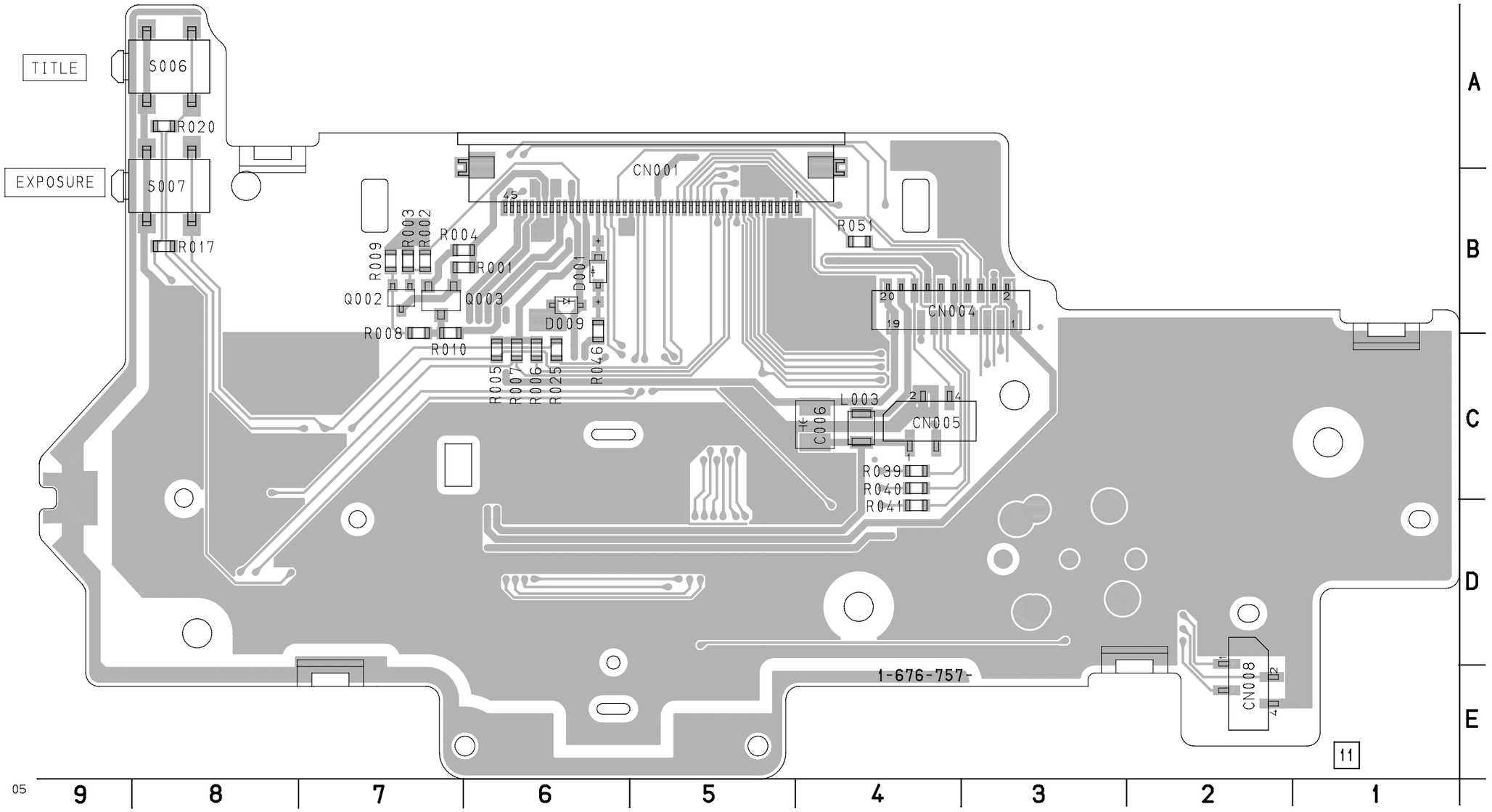

FK-10000 (CONTROL SWITCH BLOCK) SCHEMATIC DIAGRAM

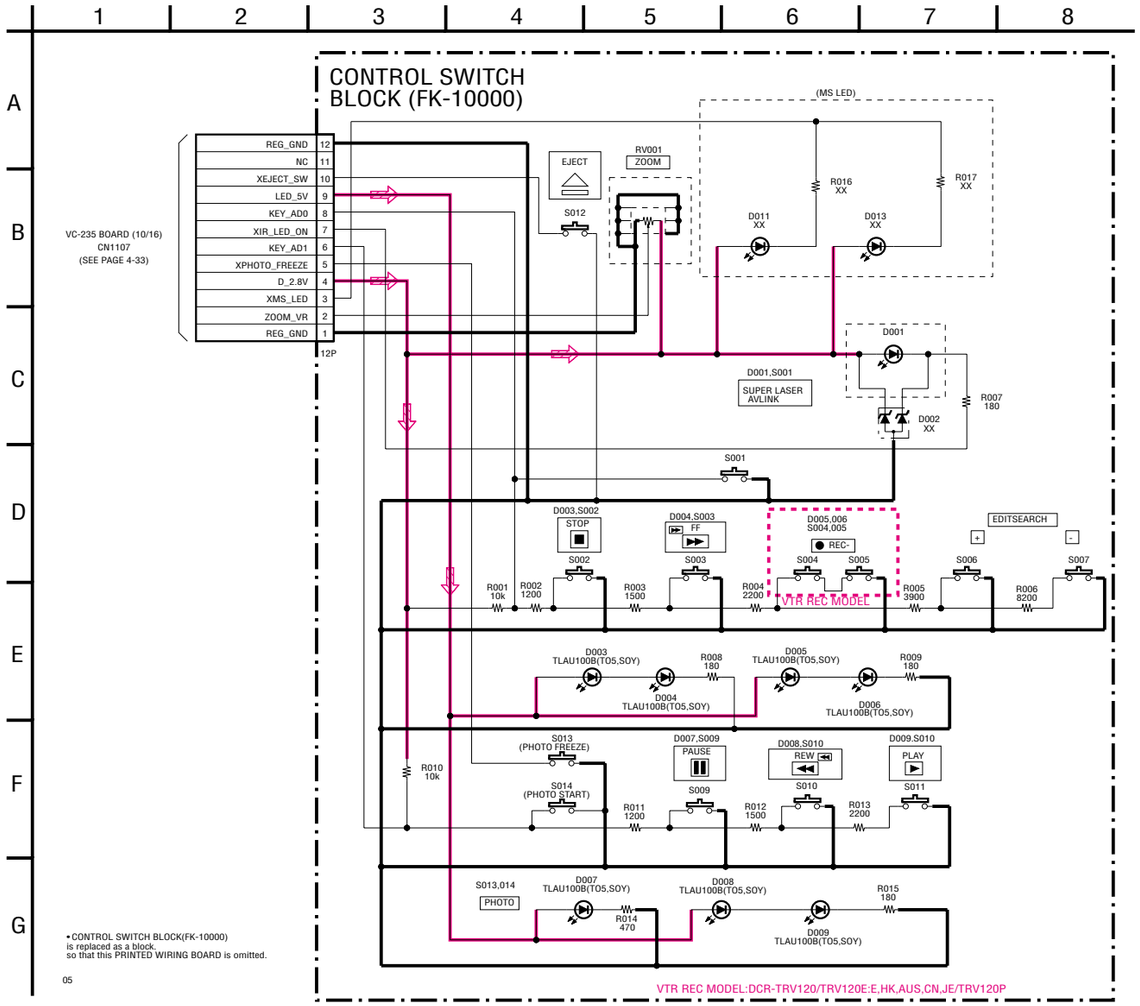

• CONTROL SWITCH BLOCK(FK-10000)
is replaced as a block.
so that this PRINTED WIRING BOARD is omitted.

05

VF-129 (B/W EVF) PRINTED WIRING BOARD

– Ref. No.: VF-129 board; 20,000 series –

- **For Printed Wiring Board.**
- There are few cases that the part isn't mounted in this model is printed on this diagram.
- Chip transistor

VF-129 BOARD(SIDE A)

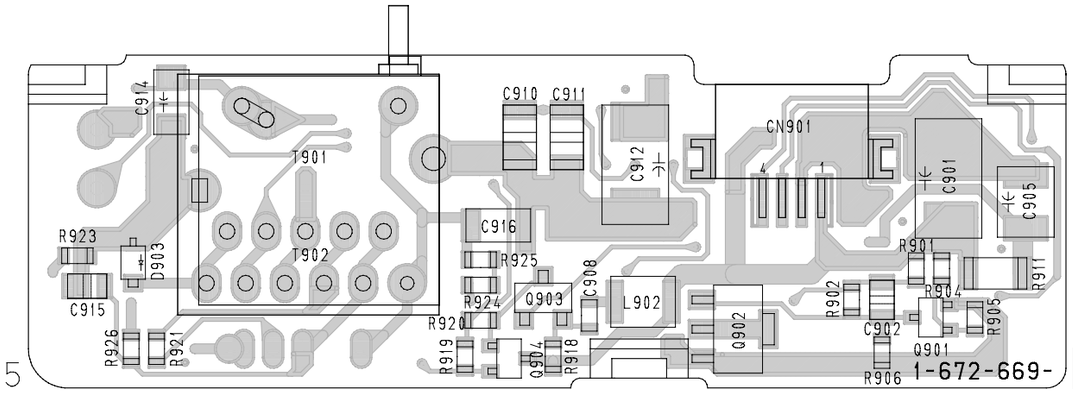

VF-129 BOARD(SIDE B)

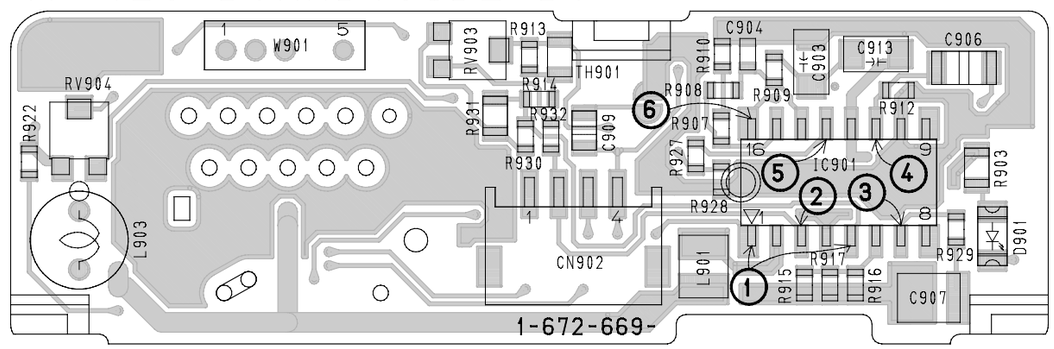

VF-129 (B/W EVF) SCHEMATIC DIAGRAM • See page 4-90 for waveforms.

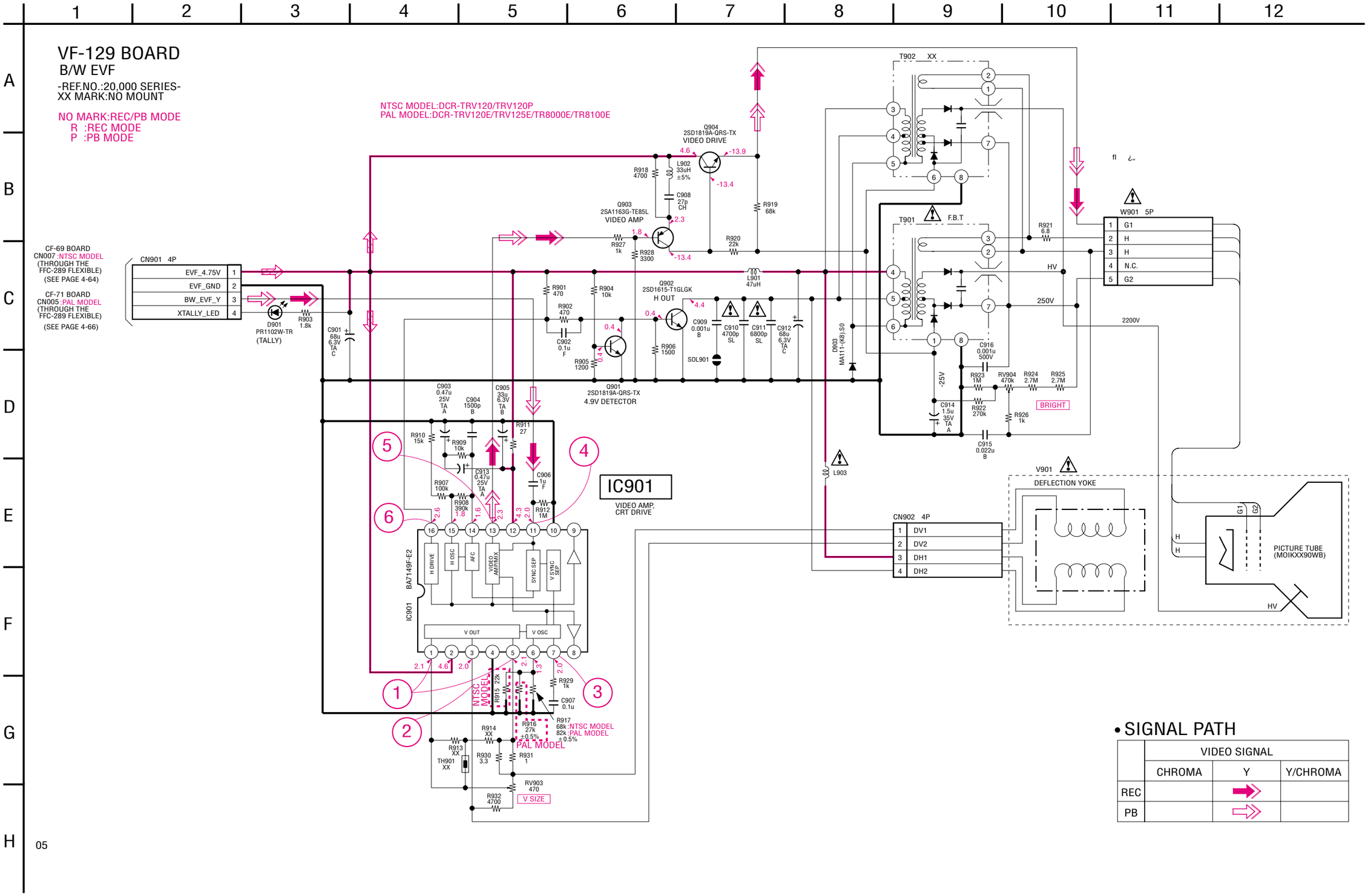

• SIGNAL PATH

	VIDEO SIGNAL		
	CHROMA	Y	Y/CHROMA
REC		⇒	
PB		⇨	

The components identified by mark ⚠ or dotted line with mark ⚠ are critical for safety. Replace only with part number specified.	Les composants identifiés par une marque ⚠ sont critiques pour la sécurité. Ne les remplacer que par une piéce portant le numéro spécifié.

PD-117 (RGB/CG LCD DRIVER, TIMING GENERATOR, BACK LIGHT) PRINTED WIRING BOARD

– Ref. No.: PD-117 board; 20,000 series –

- **For Printed Wiring Board.**
- PD-117 board is four-layer print board. However, the patterns of layers 2 to 3 have not been included in the diagram.
- There are few cases that the part isn't mounted in this model is printed on this diagram.
- See page 4-93 for printed parts location.
- Chip transistor

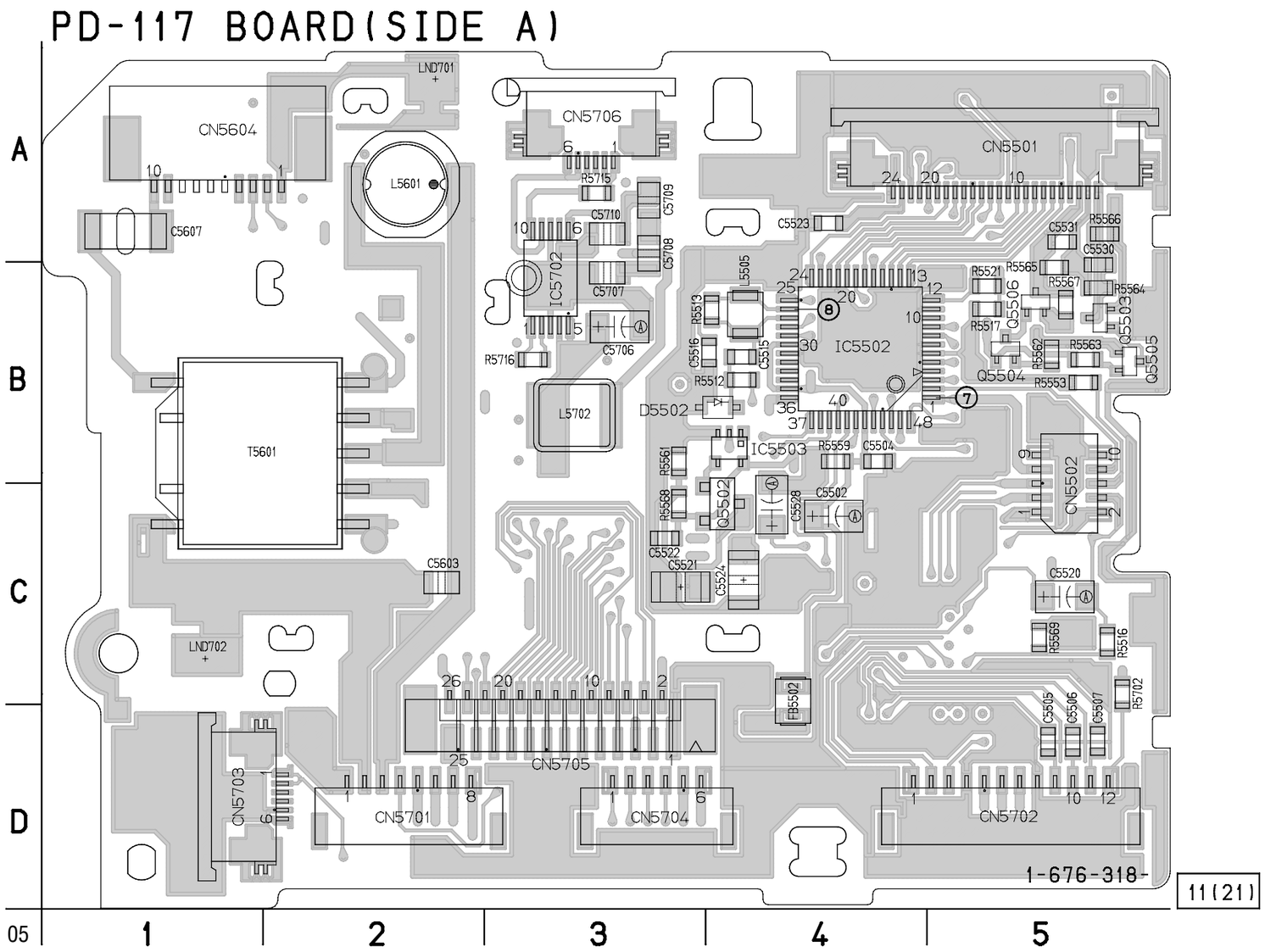

PD-117 BOARD(SIDE B)

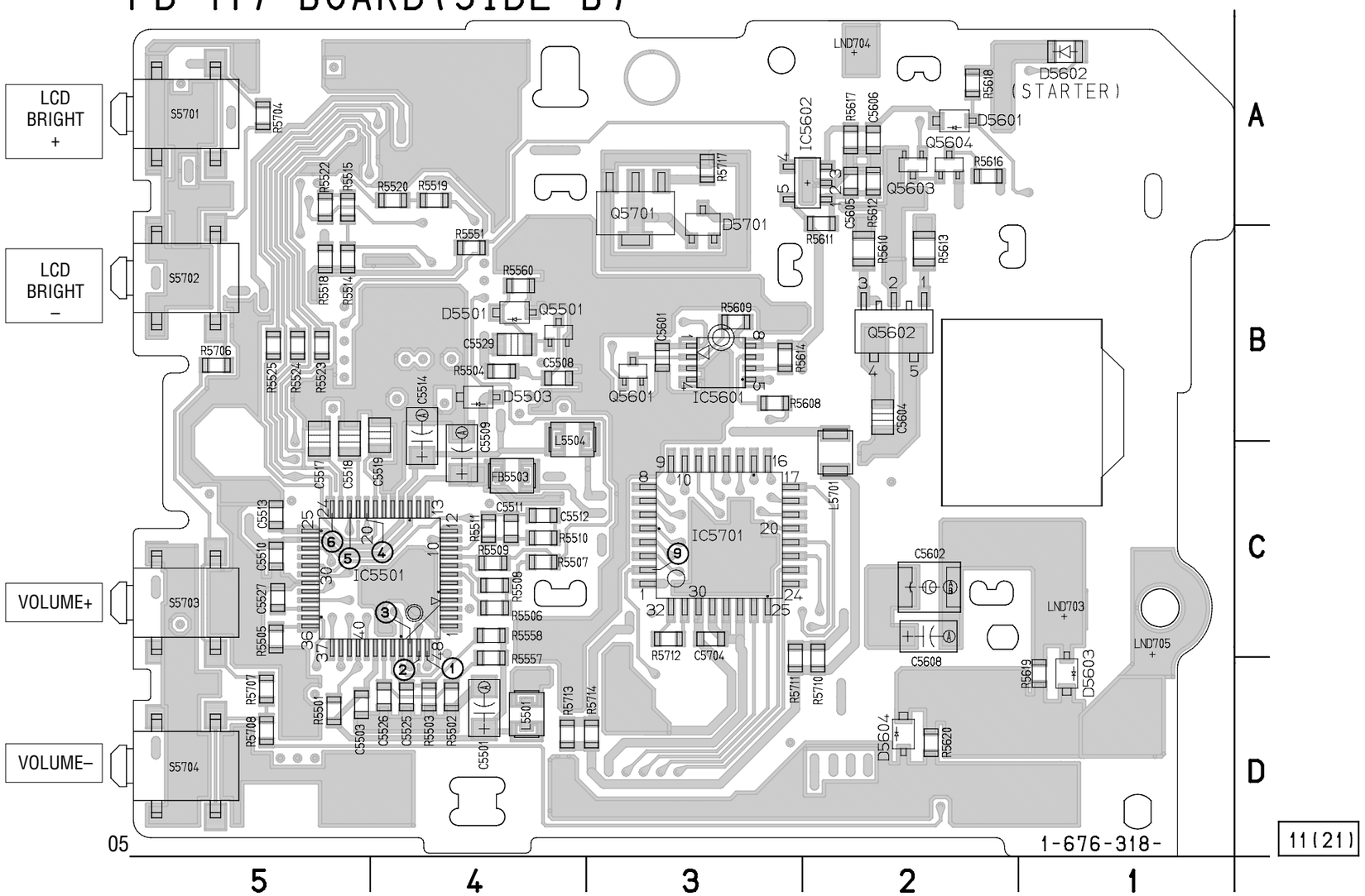

PD-117 (RGB LCD DRIVER, TIMING GENERATOR) SCHEMATIC DIAGRAM • See page 4-75 for PD-117 printed wiring board. • See page 4-89 for waveforms.

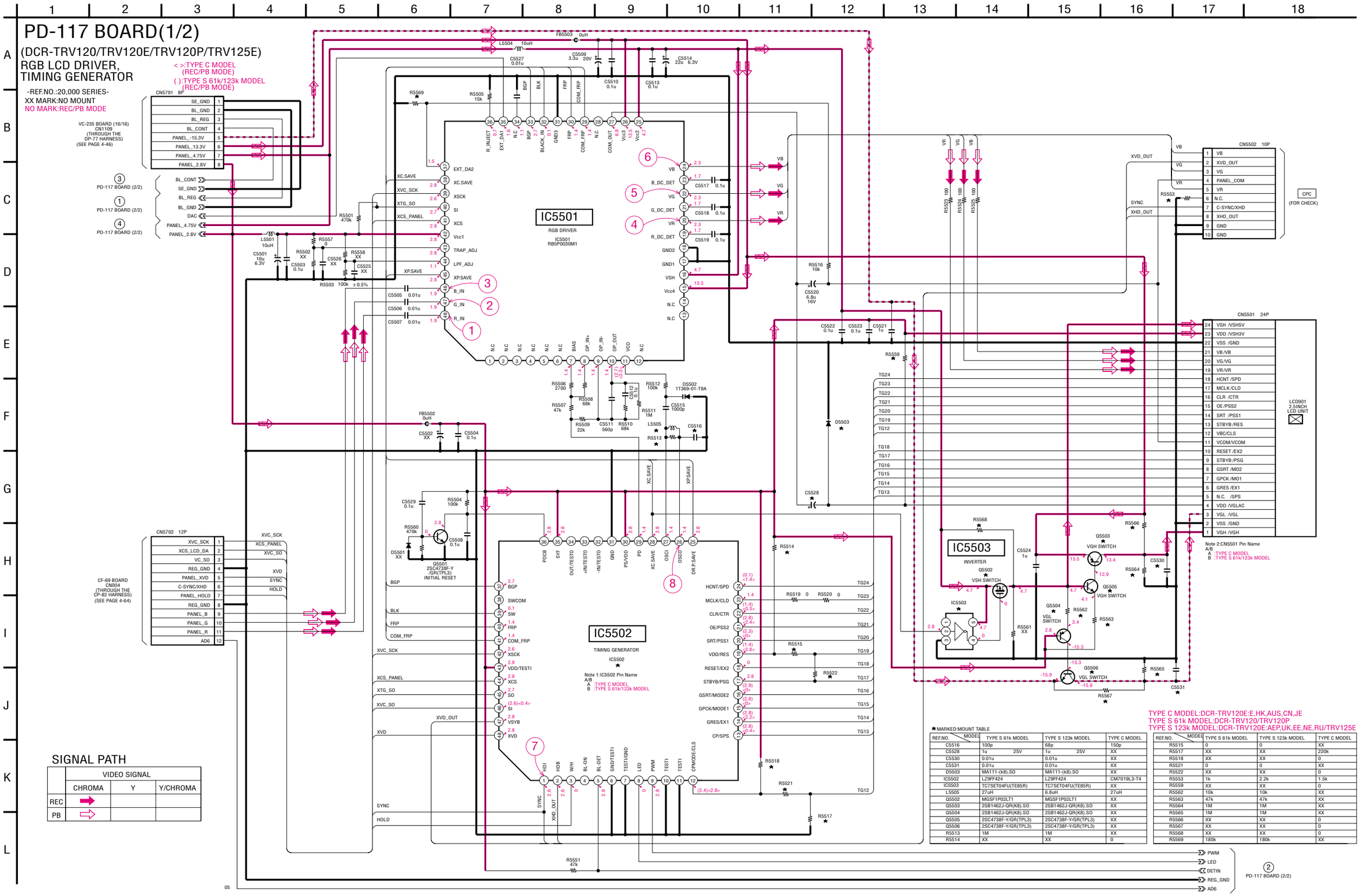

★MARKED:MOUNT TABLE

REF.NO. \ MODEL	TYPE S 61k MODEL	TYPE S 123k MODEL	TYPE C MODEL
C5516	100p	68p	150p
C5528	1u 25V	1u 25V	XX
C5530	0.01u	0.01u	XX
C5531	0.01u	0.01u	XX
D5503	MA111-(k8).SO	MA111-(k8).SO	XX
IC5502	LZ9FF424	LZ9FF424	CM7019L3-T4
IC5503	TC7SET04FU(TE85R)	TC7SET04FU(TE85R)	XX
L5505	27uH	6.8uH	27uH
Q5502	MGSF1P02LT1	MGSF1P02LT1	XX
Q5503	2SB1462J-QR(K8).SO	2SB1462J-QR(K8).SO	XX
Q5504	2SB1462J-QR(K8).SO	2SB1462J-QR(K8).SO	XX
Q5505	2SC4738F-Y/GR(TPL3)	2SC4738F-Y/GR(TPL3)	XX
Q5506	2SC4738F-Y/GR(TPL3)	2SC4738F-Y/GR(TPL3)	XX
R5513	1M	1M	XX
R5514	XX	XX	0

REF.NO. \ MODEL	TYPE S 61k MODEL	TYPE S 123k MODEL	TYPE C MODEL
R5515	0	0	XX
R5517	XX	XX	220k
R5518	XX	XX	0
R5521	0	0	XX
R5522	XX	XX	0
R5553	1k	2.2k	1.5k
R5559	XX	XX	0
R5562	10k	10k	XX
R5563	47k	47k	XX
R5564	1M	1M	XX
R5565	1M	1M	XX
R5566	XX	XX	0
R5567	XX	XX	0
R5568	XX	XX	0
R5569	180k	180k	XX

TYPE C MODEL:DCR-TRV120E:E,HK,AUS,CN,JE
TYPE S 61k MODEL:DCR-TRV120/TRV120P
TYPE S 123k MODEL:DCR-TRV120E:AEP,UK,EE,NE,RU/TRV125E

PR-10000 (PANEL REVERSE SWITCH BLOCK), PD-117 (CG LCD DRIVER, BACK LIGHT) SCHEMATIC DIAGRAM • See page 4-75 for PD-117 printed wiring board. • See page 4-89 for waveforms.

PD-117 BOARD(2/2)

(DCR-TRV120/TRV120E/TRV120P/TRV125E)

CG LCD DRIVER,BACK LIGHT

-REF.NO.:20,000 SERIES-
XX MARK:NO MOUNT
NO MARK:REC/PB MODE

LND701 GND
LND702 GND
LND703 GND
LND704 GND
L5601 100uH
R5610 1800
R5613 1800
BLC10S
C5604 0.015u
C5602 10u 10V
C5608 10u 10V
C5603 1u
Q5602 FP216-TL INVERTER TRANS DRIVE
T5601
C5607 12pF 3kV
C5706 XX
L5701 XX
L5702 XX
R5716 XX
IC5702 XX
VCC ENB GND RT2 RT1
CIL DC GND EL -EL
R5715 XX
R5717 XX
Q5701 XX
C5707 XX
C5708 XX
C5709 XX
C5710 XX
D5701 XX
R5710 XX
R5711 0
R5713 XX
R5714 0
CN5705 26P
COM1 COM2 SEG2 SEG3 SEG4 SEG5 SEG6 SEG7 SEG8 SEG9 SEG10 SEG11 SEG12 SEG13 SEG14 SEG1 SEG16 SEG15 SEG18 SEG17 COM4 COM3 BL_VDD BL_GND
FP-94 FLEXIBLE
LCD INDICATION BLOCK ASSY
LCD902 CHARACTER DISPLAY
LCD
R3 100k
R2 62
R1 62
LED901-1 BACK-LIGHT
LED901-2 BACK-LIGHT

BL_REG
BL_GND
① PD-117 BOARD (1/2)

DAC
PANEL_4.75V
PANEL_2.8V
④ PD-117 BOARD (1/2)

R5608 0
Q5604 RN2102F(TPL3) LED SWITCH
R5616 120
IC5602
CURRENT DETECT
R5611 100k
IC5602 TA75S393F-TE85R
D5601 MA111-(K8).SO
R5617 22k
C5606 0.1u
R5618 470
R5619 XX
D5603 XX
LND705 GND
R5620 XX
D5604 XX
R5612 12k
C5605 0.1u
Q5603 RN1104F(TPL3) LED SWITCH
R5614 10k

SE_GND
③ PD-117 BOARD (1/2)

IC5601 TC7W53FU(TE12R)
R5609 10k
COM INH VEE GND VCC CH0 CH1 A
C5601 XX
IC5601
BACK LIGHT BRIGHT SWITCH

BL_CONT
PWM
REG_GND
DETIN
LED
② PD-117 BOARD (1/2)

Q5601 RN1104F(TPL3) INVERTER

AD6
R5702 1.2k

CN5706 XX
-EL -EL N.C. N.C. EL EL

SEG18 SEG17 SEG16 SEG15 SEG14 SEG13 SEG12 SEG11
R5712 680k
IC5701
LCD DRIVE
IC5701 BU9735K-E2
OSC1 OSC2 VSS VC VLCD VDD SCK SD
C5704 0.1u
SCK SO
SEG10 SEG9 SEG8 SEG7 SEG6 SEG5 SEG4 SEG3
XCS C/XD COM1 COM2 COM3 COM4 SEG1 SEG2

CN5604 10P
BL_HIGH N.C N.C N.C N.C N.C BL_LOW LED LED_GND
ND901 BACK LIGHT
D5602 PG1112H-TR (STARTER)

CN5704 6P
XCS C/XD SO SCK
XCS_LCD_DRIVER LCD_COM/XDATA OSD_SO XOSD_SCK DISP_LCD_VDD DISP_BL
CF-69 BOARD CN005 (THROUGH THE CP-81 HARNESS) (SEE PAGE 4-64)

PANEL REVERSE SWITCH BLOCK (PR-10000)

S001 (PANEL REVERSE)

CN5703 6P

1	PANEL_REV	PANEL_REV	1
2	PANEL_REV	PANEL_REV	2
3	N.C.	N.C.	3
4	N.C.	N.C.	4
5	GND	GND	5
6	GND	GND	6

R5708 8200
R5707 3900
R5706 2200
R5704 1500

S5704 VOLUME –
S5703 VOLUME +
S5702 LCD BRIGHT –
S5701 LCD BRIGHT +

• PANEL REVERSE SWITCH BLOCK (PR-10000)is replaced as a block. so that this PRINTED WIRING BOARD is omitted.

05

The components identified by mark ⚠ or dotted line with mark ⚠ are critical for safety. Replace only with part number specified.	Les composants identifiés par une marque ⚠ sont critiques pour la sécurité. Ne les remplacer que par une piéce portant le numéro spécifié.

PANEL REVERSE SWITCH BLOCK/CG LCD DRIVER, BACK LIGHT
PR-10000 / PD-117 (2/2)

FU-138/143 (DC IN) PRINTED WIRING BOARD
– Ref. No.: FU-138 board; 20,000 series –

- **For Printed Wiring Board.**
- There are few cases that the part isn't mounted in this model is printed on this diagram.
- Chip transistor

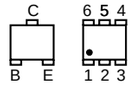

FU-138/143 BOARD (SIDE A)

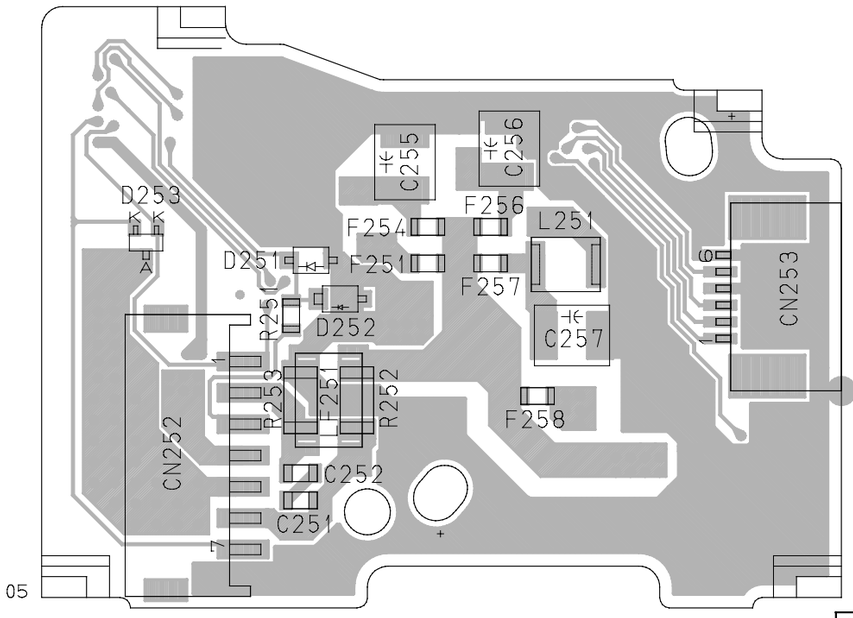

FU-138:1-676-775- 11 (21)
FU-143:1-676-756- 11

FU-138/143 BOARD (SIDE B)

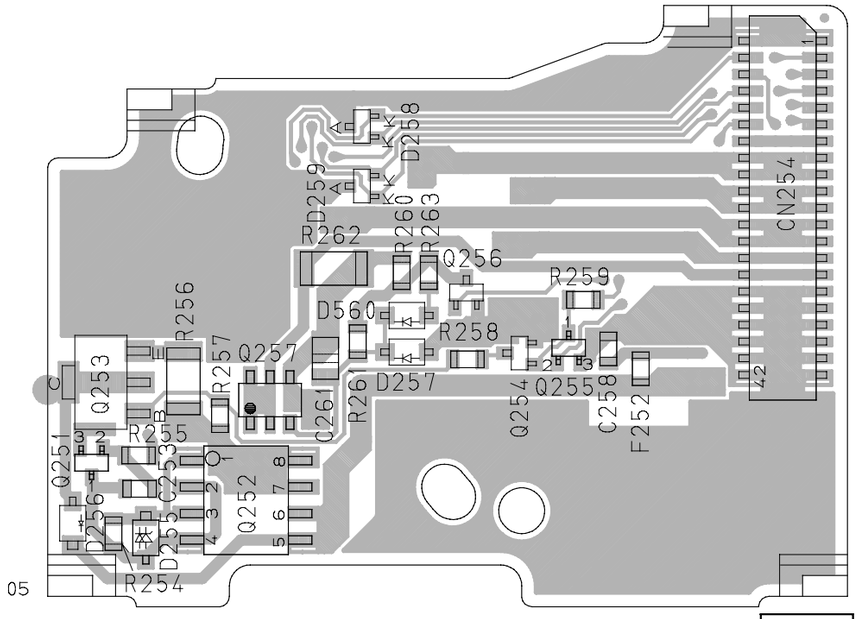

FU-138:1-676-775- 11 (21)
FU-143:1-676-756- 11

SS-10000 (CONTROL SWITCH BLOCK), FU-138/143 (DC IN) SCHEMATIC DIAGRAM

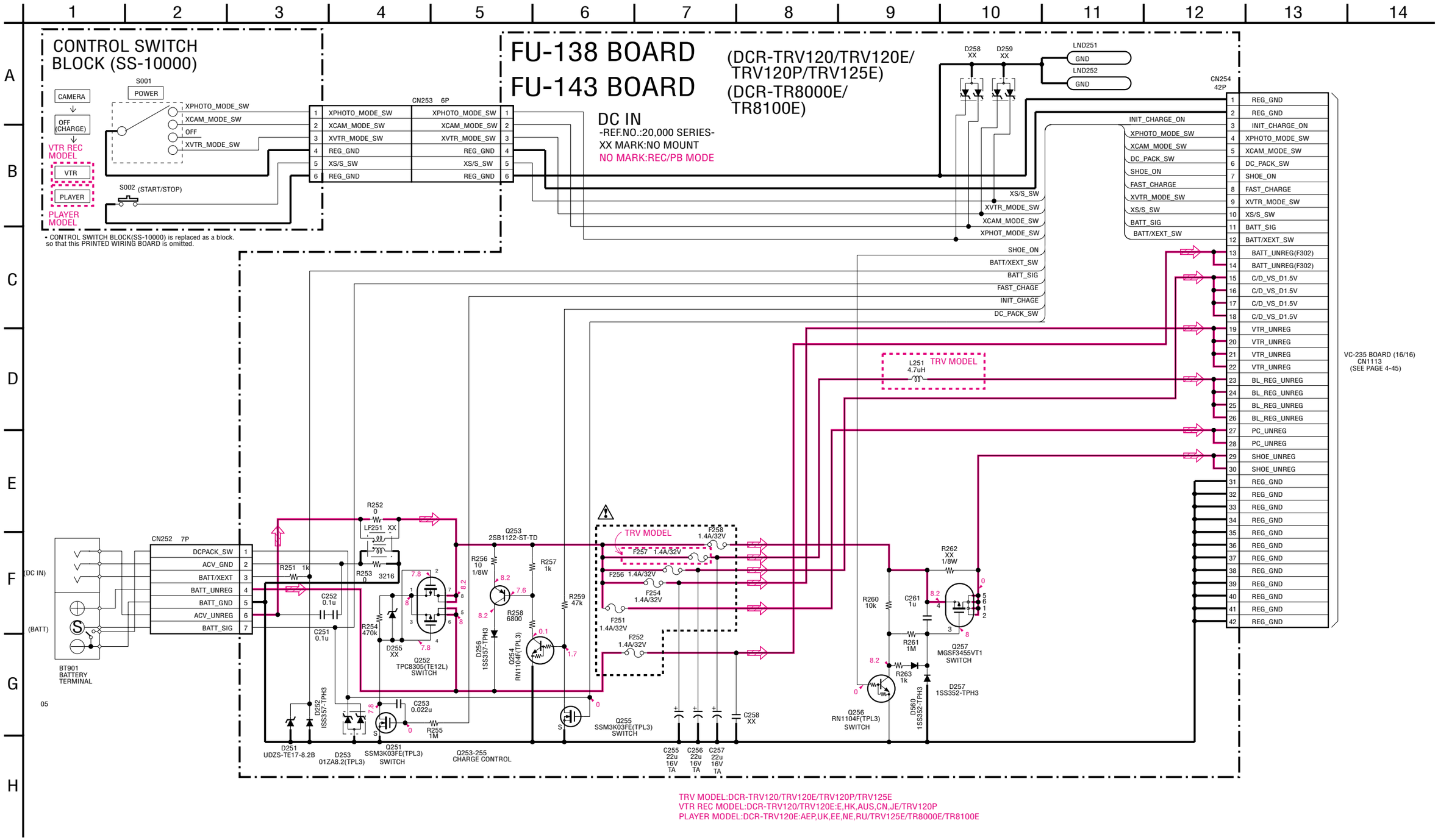

TRV MODEL:DCR-TRV120/TRV120E/TRV120P/TRV125E
VTR REC MODEL:DCR-TRV120/TRV120E:E,HK,AUS,CN,JE/TRV120P
PLAYER MODEL:DCR-TRV120E:AEP,UK,EE,NE,RU/TRV125E/TR8000E/TR8100E

The components identified by mark ⚠ or dotted line with mark ⚠ are critical for safety. Replace only with part number specified.	Les composants identifiés par une marque ⚠ sont critiques pour la sécurité. Ne les remplacer que par une piéce portant le numéro spécifié.

4-3. WAVEFORMS

CD-242 BOARD

❶ 7 Vp-p, 66 usec — IC101 ①, ② REC/PB

❷ 7 Vp-p, 66 usec — IC101 ③, ④ REC/PB

❸ 1.1 Vp-p, 66 usec — IC101 ⑦ REC/PB

❹ 3.5 Vp-p, 13.5 MHz — IC101 ⑬, ⑭ REC/PB

❺ 3.4 Vp-p, 13.5 MHz — IC101 ⑫ REC/PB

❻ 18 Vp-p, 66 usec — IC101 ⑩ REC/PB

CD-244/269 BOARD

❶ 7 Vp-p, 66 usec — IC151 ①, ② REC/PB

❷ 7 Vp-p, 66 usec — IC151 ③, ④ REC/PB

❸ 1.1 Vp-p, 66 usec — IC151 ⑧ REC/PB

❹ 3.4 Vp-p, 18 MHz — IC151 ⑩ REC/PB

❺ 3.5 Vp-p, 18 MHz — IC151 ⑪, ⑫ REC/PB

❻ 18 Vp-p, 66 usec — IC151 ⑬ REC/PB

VC-235 BOARD

❶ 1.92 Vp-p, 720H: 27 MHz, 960H: 36 MHz — IC1501 ④ REC/PB

❷ 3.04 Vp-p, 13.5 MHz — IC1501 ⑪ REC/PB

❸ 3.84 Vp-p, 13.5 MHz — IC1501 ⑫ REC/PB

❹ 3.4 Vp-p, 720H: 13.5 MHz, 960H: 18 MHz — IC1501 ⑱ REC/PB

❺ 3.5 Vp-p, 720H: 13.5 MHz, 960H: 18 MHz — IC1501 ㉑, ㉒ REC/PB

❻ 7 Vp-p, 66 usec — IC1501 ㉕, ㉖ REC/PB

❼ 7 Vp-p, 66 usec — IC1501 ㉘, ㉛ REC/PB

❽ 1.1 Vp-p, 66 usec — IC1502 ㉚ REC/PB

❾ 344 mVp-p, H — IC2201 ㉓ PB (Hi8/Std8)

❿ 544 mVp-p, H — IC2201 ④ PB (Hi8/Std8)

⓫ 2.3 Vp-p, 14.3 MHz — IC2201 ⑰ PB (Hi8/Std8)

⓬ 1.2 Vp-p, H — IC3701 ㊱ LINE REC/PB (Hi8/Std8)

⓭ 616 mVp-p, H — IC3701 ㉞ LINE REC/PB (Hi8/Std8)

⓮ 584 mVp-p, H — IC3701 ㉔ PB (IR ON)

⓯ 2.28 Vp-p, H — IC3701 ㉒ PB (A/V JACK USE)

⓰ 2.08 Vp-p, H — IC3701 ⑱ PB (S VIDEO JACK USE)

⓱ 1.28 Vp-p, H — IC3701 ⑭ PB (S VIDEO JACK USE)

⓲ 3.08 Vp-p, 24.576 MHz — IC3301 ⑱ REC/PB

⓳ 2.26 Vp-p, 41.85 MHz — IC3301 ⑭ REC/PB

⓴ 536 mVp-p, H — IC3301 ⑮ REC/PB

㉑ 592 mVp-p, H — IC3301 ⑬ REC/PB

㉒ 504 mVp-p, H — IC3301 ⑪ REC/PB

㉓ 296 mVp-p, H — IC3301 ⑲ PB (Hi8/Std8)

㉔ 536 mVp-p, H — IC3301 ⑮ PB (Hi8/Std8)

㉕ 2.5 Vp-p, 27 MHz — IC3301 ㊻ REC/PB (Hi8/Std8)

㉕ 2.5 Vp-p, 24.576 MHz — IC3301 ㊻ PB (Digital8)

㉖ 0.2 Vp-p, NTSC: 33.3 msec, PAL: 40 msec — IC3103 ㉗, ㉙ PB (Hi8/Std8)

㉖ 0.4 Vp-p, 13.3 msec — IC3103 ㉗, ㉙ PB (Digital8)

㉗ 2.84 Vp-p, 13.3 msec — IC3103 ㉟ REC/PB (Digital8)

㉗ 2.84 Vp-p, NTSC: 33.3 msec, PAL: 40 msec — IC3103 ㉟ PB (Hi8/Std8)

㉘ 4.1 Vp-p, 13.3 msec — IC3103 ①, ②, ⑥, ⑦ REC

❷❾ 0.2 Vp-p, H — IC3201⑱ PB (Hi8/Std8)

❸⓪ 130 mVp-p, H — IC3201 ⑪ PB (Hi8/Std8)

❸① 1.34 Vp-p, 20 MHz — IC4803 ㊶ REC/PB

❸② 2.56 Vp-p, 32.768 kHz — IC4803 ㊷ REC/PB

❸③ 2.84 Vp-p, 610 µsec — IC4501 ⑮ REC/PB

34

IC4902 ① REC/PB

35

IC4902 ⑮ PB (Hi8/Std8)

36

IC4401 ⑤⑦, ⑤⑨, ⑥① REC/PB (Digital8)

36
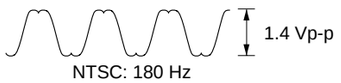

IC4401 ⑤⑦, ⑤⑨, ⑥① PB (Hi8/Std8)

37
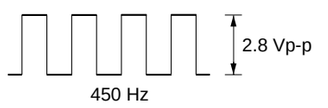

IC4401 ⑯ REC/PB (Digital8)

37
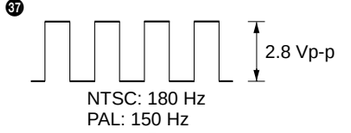

IC4401 ⑯ PB (Hi8/Std8)

38

IC4401 ㉒ REC/PB (Digital8)

38

IC4401 ㉒ PB (Hi8/Std8)

39
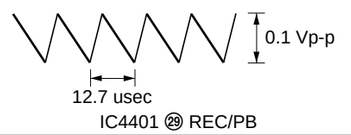

IC4401 ㉙ REC/PB

40
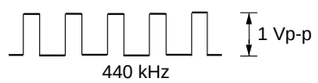

IC1301 ② REC/PB

41

IC1301 ㊷ REC/PB

42

IC1301 ㊺ REC/PB

43

IC1301 ㊻ REC/PB

44
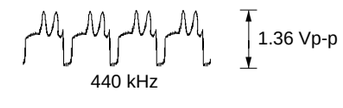

IC1301 ⑤⓪ REC/PB

45
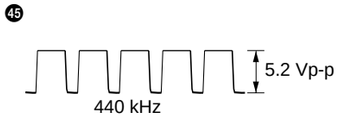

IC1301 ⑤④ REC/PB

46
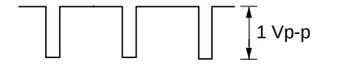

IC1301 ⑤⑦ REC/PB

MI-37 BOARD

1
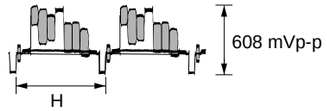

IC3901 ㊶ REC/PB (IR ON)

PD-117 BOARD

1

IC5501 ㊽ REC/PB

2

IC5501 ㊼ REC/PB

3

IC5501 ㊻ REC/PB

4
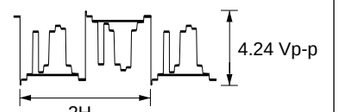

IC5501 ⑳ REC/PB

5
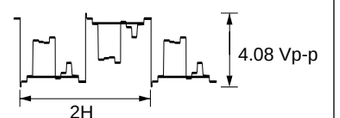

IC5501 ㉒ REC/PB

6
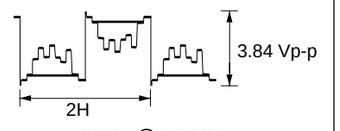

IC5501 ㉔ REC/PB

7
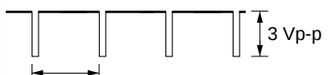

IC5502 ① REC/PB

8
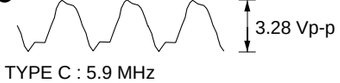

TYPE C : 5.9 MHz
TYPE S 123k: 11.66 MHz
TYPE S 61k: 5.9 MHz
IC5502 ㉖ REC/PB

9
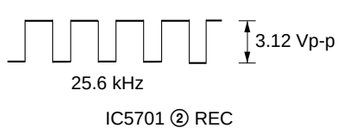

IC5701 ② REC

VF-129 BOARD

1
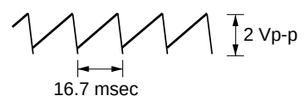

IC901 ①, ⑤ REC/PB

2
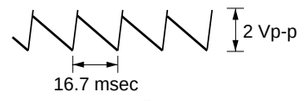

IC901 ③ REC/PB

3

IC901 ⑦ REC/PB

4

IC901 ⑪ REC/PB

5
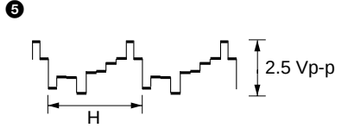

IC901 ⑬ REC/PB

6
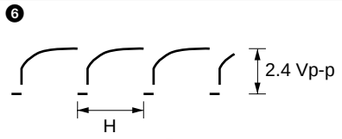

IC901 ⑯ REC/PB

4-4. PARTS LOCATION

* : C1101 and R2256 are mounted on the board with suffix number -12 (22, 32)

VC-235 BOARD (SIDE A)

Ref. No.	Location
C1320	B-6
C1322	B-6
C1333	C-8
C1335	C-8
C1336	C-8
C1338	A-8
C1339	C-8
C1340	C-7
C1341	C-8
C1342	B-9
C1343	C-7
C1345	C-8
C1346	C-9
C1347	C-7
C1348	B-9
C1350	C-7
C1352	B-6
C1353	A-6
C1354	C-5
C1355	A-6
C1356	C-8
C1357	F-4
C1508	B-5
C1513	B-4
C1514	B-4
C1515	B-5
C1516	B-4
C1517	B-4
C1518	B-4
C1519	B-4
C1520	B-4
C1521	B-4
C1522	B-4
C1523	B-4
C1525	B-5
C1552	A-5
C1554	A-5
C1558	B-5
C1559	B-5
C1560	A-5
C1561	A-4
C1562	A-5
C1564	A-5
C1565	B-5
C1566	B-5
C1568	B-5
C1570	A-5
C1572	A-5
C2201	F-4
C2202	F-4
C2203	E-3
C2204	E-4
C2208	E-4
C2210	E-3
C2211	E-3
C2212	E-4
C2213	E-3
C2214	C-4
C2215	D-4
C2222	D-4
C2223	D-4
C2224	D-4
C2225	C-4
C2226	E-3
C2227	E-4
C2228	D-3
C2229	D-4
C2230	E-4
C2233	C-4
C2234	E-4
C2236	C-4
C2238	C-4
C2240	B-3
C2242	E-6
C2243	D-6
C2244	C-3
C2247	E-4
C2250	C-4
C2291	E-6
C2292	F-7
C2293	F-6
C3111	E-6
C3121	F-5
C3122	F-5
C3123	F-5
C3124	F-5
C3126	F-5
C3127	F-5
C3128	F-4
C3131	F-4
C3133	F-4
C3134	F-6
C3135	F-6
C3136	F-6
C3138	F-5
C3139	F-6
C3201	G-3
C3202	G-2
C3203	G-2
C3204	F-2
C3205	F-3
C3206	F-2
C3207	F-3
C3208	F-2
C3210	F-3
C3211	F-3
C3212	F-3
C3213	F-3
C3214	F-3
C3215	F-3
C3216	F-3
C3217	F-3
C3218	F-3
C3320	C-6
C3327	C-6
C3349	B-3
C3350	B-3
C3351	C-3
C3701	F-1
C3704	F-2
C3705	F-2
C3706	F-2
C3707	F-2
C3708	F-2
C3709	F-2
C3710	F-2
C3711	F-2
C3712	F-2
C3713	F-2
C3714	F-2
C3715	F-3
C3716	F-3
C3717	F-2
C3718	F-2
C3719	E-2
C3723	E-2
C3724	E-2
C3728	E-2
C3729	E-2
C3730	E-2
C3731	E-2
C3732	E-3
C3733	E-3
C3734	E-2
C3735	E-2
C4401	G-8
C4402	G-9
C4403	G-7
C4404	G-8
C4405	G-8
C4406	G-8
C4407	G-8
C4408	F-8
C4409	G-6
C4410	G-9
C4411	G-6
C4412	G-6
C4413	F-7
C4414	G-8
C4415	F-8
C4416	F-8
C4417	F-7
C4418	F-9
C4419	F-7
C4420	F-8
C4421	F-7
C4424	F-7
C4425	F-8
C4426	F-9
C4427	F-9
C4428	E-7
C4429	E-7
C4430	E-8
C4431	E-8
C4432	F-9
C4433	E-7
C4434	E-7
C4435	E-8
C4436	E-8
C4801	A-6
C4821	B-5
C4822	B-6
CN1105	D-8
CN1107	A-7
CN1109	G-1
CN1111	F-1
CN1113	F-9
CN1551	A-5
CN3101	G-4
CN4401	G-2
CN4402	G-6
CN4403	G-7
CN4404	G-8
D1301	B-8
D1302	B-9
D1305	B-9
D1306	B-9
D1551	A-5
D2201	E-5
D2202	E-4
FB1504	C-5
FB2202	C-4
FB2203	D-3
FB2204	C-3
FB2205	B-3
FB2291	F-6
FB3701	F-1
FB4801	B-5
IC1302	B-6
IC1303	F-4
IC1502	B-4
IC1552	A-5
IC1553	A-4
IC2201	D-5
IC2202	E-4
IC2291	F-6
IC3103	F-5
IC3201	F-3
IC3202	F-3
IC3304	C-3
IC3701	E-2
IC4401	F-8
L1301	B-8
L1302	B-8
L1303	B-7
L1304	A-8
L1305	A-8
L1306	C-7
L1307	C-7
L1308	C-8
L1309	C-8
L1311	B-6
L1312	C-9
L1313	C-8
L1314	C-9
L1315	C-8
L1316	C-8
L1317	A-7
L1318	C-7
L1320	C-9
L1321	B-6
L2201	D-3
L2203	C-3
L2204	F-4
L2207	E-4
L2208	D-3
L2291	E-7
L3103	E-6
L3104	E-5
L3105	F-5
L3106	F-5
L3201	G-2
L3305	C-6
L3306	C-6
L3701	E-3
L3705	E-1
Q1104	D-7
Q1315	B-6
Q1316	C-7
Q1318	C-6
Q1320	C-6
Q1321	C-6
Q1322	A-6
Q1323	C-6
Q1324	A-6
Q1325	C-6
Q1326	A-6
Q1551	A-5
Q1554	B-5
Q2204	F-4
Q3103	F-4
Q3104	F-6
Q3105	F-5
Q3106	F-5
Q3108	F-6
Q3111	F-6
Q3116	F-5
Q3201	F-3
Q3701	G-1
Q4401	G-8
Q4402	E-8
Q4801	A-6
Q4802	A-6
Q4803	A-6
Q4805	A-6
R1105	D-6
R1106	D-6
R1107	D-6
R1108	D-6
R1109	D-6
R1110	D-6
R1111	D-6
R1112	D-6
R1113	E-6
R1114	E-6
R1115	E-6
R1116	E-6
R1117	E-7
R1118	E-7
R1119	E-7
R1120	E-7
R1121	E-6
R1122	E-6
R1123	E-7
R1124	D-7
R1125	D-8
R1129	C-7
R1130	C-7
R1134	D-7
R1145	C-7
R1308	A-6
R1315	F-4
R1323	C-7
R1327	B-6
R1330	C-6
R1331	C-6
R1332	C-6
R1333	B-6
R1334	B-6
R1335	A-6
R1336	B-6
R1337	A-6
R1338	C-6
R1339	B-6
R1340	B-6
R1341	A-6
R1342	A-6
R1343	A-6
R1511	B-5
R1514	B-4
R1520	B-5
R1552	A-4
R1553	A-5
R1556	A-4
R1560	A-5
R1561	B-5
R1562	A-5
R1563	A-5
R1564	A-5
R1565	A-5
R1566	A-5
R1567	A-5
R1568	A-5
R1569	B-5
R1570	A-5
R1571	A-5
R1572	A-5
R1573	A-5
R1574	B-5
R1575	A-5
R1576	B-5
R1577	B-5
R2205	F-4
R2206	E-4
R2208	C-3
R2209	E-3
R2210	E-3
R2211	C-3
R2213	F-4
R2215	E-3
R2216	E-4
R2218	E-3
R2219	F-4
R2220	E-3
R2221	E-3
R2222	E-5
R2223	E-4
R2224	C-3
R2225	C-4
R2230	E-4
R2240	E-3
R2242	E-4
R2243	E-4
R2244	C-4
R2245	C-3
R2247	E-5
R2248	E-5
R2254	C-4
R2255	E-5
*R2256	E-5
R3114	F-4
R3115	F-4
R3116	F-4
R3117	F-5
R3118	F-5
R3119	F-5
R3120	F-5
R3121	F-5
R3122	F-5
R3123	F-6
R3124	F-6
R3125	F-4
R3126	F-5
R3127	F-6
R3129	F-5
R3130	F-5
R3131	F-4
R3132	F-5
R3133	F-5
R3136	F-5
R3137	F-6
R3138	F-5
R3143	F-5
R3144	F-5
R3205	F-3
R3206	F-2
R3210	F-3
R3211	F-4
R3212	F-3
R3213	F-3
R3214	F-3
R3215	G-2
R3308	C-3
R3382	C-6
R3383	C-6
R3701	G-1
R3702	G-1
R3704	G-1
R3705	G-1
R3712	F-2
R3713	F-2
R3714	F-2
R3715	F-2
R3716	F-2
R3717	F-2
R3721	F-2
R3722	F-2
R3724	E-2
R3726	E-2
R3727	E-2
R3728	E-2
R3729	E-2
R3730	E-2
R3734	F-1
R4401	G-7
R4402	G-7
R4405	F-7
R4407	G-8
R4408	G-7
R4409	G-7
R4410	G-7
R4411	G-9
R4413	G-8
R4414	G-9
R4416	F-8
R4417	F-9
R4423	F-8
R4424	F-9
R4425	F-7
R4426	F-7
R4427	F-8
R4428	F-7
R4429	F-7
R4430	F-9
R4431	F-8
R4432	E-8
R4434	E-7
R4435	E-7
R4436	E-8
R4437	F-8
R4438	F-8
R4442	G-8
R4443	G-7
R4444	E-8
R4445	G-8
R4446	E-8
R4447	G-7
R4448	G-7
R4801	A-6
R4802	A-6
R4805	A-6
R4806	A-6
R4807	A-6
R4809	A-6
R4810	A-6
R4851	D-8
R4876	B-6
T1301	A-9
X4802	B-6

VC-235 BOARD (SIDE B)

Ref. No.	Location
*C1101	A-4
C1301	C-8
C1302	C-7
C1303	C-7
C1304	C-8
C1305	C-8
C1306	C-7
C1307	C-8
C1308	C-8
C1309	C-7
C1310	C-8
C1311	C-7
C1312	C-8
C1313	B-7
C1314	B-8
C1315	B-7
C1316	B-8
C1317	B-8
C1318	B-8
C1319	B-7
C1321	A-8
C1323	B-8
C1326	B-8
C1327	B-8
C1328	A-9
C1329	B-7
C1330	A-8
C1331	A-8
C1332	A-7
C1334	A-9
C1337	A-9
C1344	A-7
C1351	C-9
C1359	A-9
C1501	B-5
C1502	B-5
C1503	B-5
C1504	B-5
C1505	B-5
C1506	B-5
C1507	B-4
C1509	B-4
C1511	C-5
C1512	C-4
C1524	B-4
C1556	A-5
C1563	B-4
C1569	A-5
C1571	A-5
C2232	C-4
C3102	E-5
C3104	F-4
C3105	E-5
C3107	F-4
C3108	F-5
C3109	F-5
C3110	F-5
C3112	F-5
C3113	F-5
C3114	F-5
C3115	F-5
C3116	F-4
C3117	F-5
C3118	F-5
C3119	F-4
C3120	F-5
C3137	G-5
C3141	G-5
C3142	G-4
C3143	G-4
C3144	G-5
C3301	D-3
C3302	F-4
C3303	C-3
C3305	E-4
C3306	D-3
C3307	E-4
C3308	E-4
C3309	C-4
C3310	E-4
C3311	C-5
C3312	E-5
C3313	E-6
C3314	E-6
C3315	C-6
C3316	C-6
C3317	E-6
C3318	E-6
C3319	E-6
C3321	C-5
C3322	E-6
C3323	D-6
C3324	C-6
C3325	C-6
C3326	C-6
C3328	C-6
C3329	G-2
C3331	G-1
C3332	G-1
C3333	G-2
C3334	C-3
C3335	G-2
C3337	F-1
C3338	G-1
C3342	C-6
C3343	C-5
C3345	C-5
C3346	E-5
C3348	E-6
C3601	C-7
C3603	D-7
C3604	C-6
C3608	D-7
C3610	C-8
C3611	D-6
C3612	D-6
C3613	D-7
C3614	D-7
C3615	D-7
C3616	D-7
C3617	D-7
C3618	D-7
C3619	D-7
C3620	D-7
C3621	D-8
C3622	D-6
C3626	D-8
C3628	D-8
C3629	D-8
C3630	E-8
C3631	E-6
C3632	E-8
C3633	E-7
C3634	E-7
C3636	D-6
C4501	G-6
C4504	F-7
C4505	F-7
C4506	F-7
C4507	E-7
C4508	F-7
C4509	G-6
C4510	E-6
C4802	E-8
C4803	E-9
C4804	F-9
C4805	E-9
C4806	A-6
C4807	A-6
C4808	A-7
C4809	A-7
C4810	A-7
C4811	A-7
C4812	A-6
C4813	A-6
C4814	A-6
C4816	A-6
C4817	A-6
C4819	C-6
C4820	B-5
C4823	B-5
C4824	A-5
C4825	A-5
C4826	A-5
C4902	G-8
C4903	G-7
C4904	G-7
C4905	F-7
C4906	F-7
C4907	G-7
C4908	G-8
C4909	G-8
C4910	G-8
C4911	F-9
C5701	E-2
C5702	E-2
C5703	E-2
C5704	E-2
C5705	E-3
C5706	E-3
C5709	E-2
C5710	F-2
C5711	G-2
C5712	G-3
C5713	E-3
C5714	G-3
C5715	E-3
C5716	G-3
C5717	E-2
C5718	F-3
C5719	E-3
C5720	F-3
C5721	F-3
C5722	E-3
C5723	G-3
C5724	E-3
C5725	G-4
C5728	G-4
C5730	G-4
C5731	F-4
C5732	E-3
C5733	F-4
C5734	E-3
C5735	F-4
C5736	G-4
C5737	E-3
C5738	G-4
C5739	E-3
C5740	F-4
C5741	F-4
C5742	G-4
C5743	F-4
C5744	F-4
C5745	F-4
C5746	F-4
C5747	F-4
C5748	F-4
C5749	F-4
C5750	E-2
C5751	E-2
C5752	E-1
C5753	E-1
C5754	E-2
C5755	E-2
C5756	E-1
C5757	E-1
C5758	G-3
C5759	G-4
CN1101	A-4
CN1103	F-1
CN1108	C-9
D1101	A-4
D1102	A-4
D1103	A-7
D1104	A-8
D3301	E-6
D3302	E-6
D3303	C-6
D3304	C-6
D4401	D-8
D4801	E-8
D4802	E-9
D4803	E-8
D4804	E-9
FB1501	B-4
FB1502	B-4
FB1503	B-4
FB1505	B-4
FB3303	F-4
FB3304	G-2
FB3307	C-3
FB3601	E-8
FB4501	F-7
FB4901	G-9
IC1301	C-8
IC1501	B-4
IC3101	F-5
IC3102	F-5
IC3301	D-4
IC3302	D-3
IC3303	F-2
IC3603	D-7
IC4501	F-6
IC4502	E-7
IC4801	E-8
IC4802	E-9
IC4803	B-6
IC4901	F-9
IC4902	F-8
IC5701	F-3
IC5702	E-1
L1310	A-8
L1501	B-4
L1551	A-4
L1552	A-4
L1553	A-5
L2202	C-4
L2209	C-4
L3102	G-5
L3303	E-6
L3304	C-6
L3307	G-2
L3601	C-7
L3602	C-7
L5701	E-2
Q1101	A-7
Q1102	A-7
Q1103	A-8
Q1301	A-9
Q1302	B-8
Q1303	A-8
Q1304	A-8
Q1305	B-7
Q1306	A-8
Q1307	B-8
Q1308	A-8
Q1309	A-7
Q1310	B-8
Q1311	B-9
Q1312	B-9
Q1313	B-9
Q1314	B-9
Q1317	C-8
Q1319	C-9
Q1552	A-5
Q1553	A-5
Q3102	F-4
Q3107	G-5
Q3109	G-4
Q3110	G-5
Q3112	F-4
Q3113	F-4
Q3114	F-5
Q3115	F-5
Q3302	D-6
Q3304	D-6
Q3305	D-6
Q3306	D-6
Q3307	D-6
Q3308	D-6
Q3602	C-7
Q3603	D-7
Q3604	C-6
Q3605	D-6
Q3606	D-7
Q4804	E-8
Q4806	E-9
Q4901	F-7
Q5701	G-3
Q5703	E-2
Q5704	G-2
Q5706	E-2
Q5708	E-2
Q5714	G-3
Q5715	G-3
R1101	A-4
R1127	G-8
R1128	G-8
R1131	G-9
R1132	G-9
R1137	A-8
R1141	A-7
R1142	C-9
R1143	C-9
R1144	D-9
R1146	A-8
R1147	A-8
R1301	C-8
R1302	C-8
R1303	C-8
R1304	B-8
R1305	C-8
R1306	C-7
R1307	C-8
R1309	C-8
R1310	C-7
R1311	C-7
R1312	C-8
R1313	C-7
R1314	C-8
R1316	B-9
R1317	B-9
R1318	B-9
R1319	B-9
R1320	B-9
R1321	B-9
R1322	B-9
R1324	C-9
R1325	C-9
R1326	C-8
R1328	C-9
R1329	C-9
R1345	B-7
R1347	B-8
R1348	B-8
R1501	B-5
R1502	B-5
R1503	B-5
R1504	B-4
R1505	B-4
R1506	B-4
R1512	C-4
R1551	A-5
R1555	A-5
R1557	A-5
R1558	A-5
R1559	A-5
R3103	F-4
R3104	F-4
R3105	E-5
R3106	F-5
R3107	F-5
R3108	F-5
R3109	F-5
R3110	F-5
R3111	F-4
R3112	F-5
R3113	F-5
R3128	G-5
R3139	G-4
R3140	F-4
R3141	G-5
R3142	F-5
R3146	F-4
R3305	D-3
R3309	E-6
R3310	E-6
R3311	E-6
R3312	E-6
R3313	E-6
R3314	D-6
R3315	D-5
R3316	D-5
R3317	C-5
R3318	C-6
R3319	C-6
R3320	E-6
R3321	C-5
R3322	E-6
R3323	C-6
R3324	C-6
R3325	C-6
R3326	C-5
R3328	D-6
R3331	D-6
R3333	G-2
R3334	D-6
R3336	D-6
R3337	G-2
R3338	D-6
R3340	D-6
R3341	D-6
R3343	D-6
R3346	G-1
R3349	G-2
R3350	G-1
R3351	D-6
R3352	E-1
R3356	C-6
R3358	D-6
R3360	C-6
R3361	F-1
R3362	G-1
R3364	F-1
R3365	G-1
R3367	F-1
R3368	F-1
R3369	G-1
R3370	F-1
R3371	G-1
R3372	F-1
R3375	D-3
R3376	D-3
R3377	E-5
R3378	C-5
R3379	C-5
R3380	E-4
R3381	E-6
R3385	E-4
R3386	D-3
R3604	D-8
R3607	C-7
R3609	D-6
R3611	C-7
R3612	C-6
R3617	D-7
R3618	C-6
R3622	D-7
R3636	D-8
R3639	D-8
R3643	D-6
R3652	D-6
R3656	E-8
R3657	D-6
R3658	C-7
R3659	C-6
R3660	C-7
R4403	E-7
R4404	E-7
R4406	E-8
R4502	G-6
R4503	G-6
R4504	G-6
R4505	G-6
R4507	G-7
R4508	F-7
R4511	E-7
R4512	F-7
R4514	F-7
R4515	E-7
R4516	E-7
R4517	E-6
R4518	E-6
R4520	E-7
R4521	E-6
R4522	E-6
R4523	E-6
R4524	E-6
R4525	E-6
R4526	E-6
R4527	E-7
R4528	E-7
R4529	E-7
R4530	F-7
R4531	F-7
R4532	E-6
R4533	F-5
R4534	F-5
R4803	E-8
R4808	E-8
R4811	E-7
R4813	A-7
R4814	B-7
R4815	B-7
R4816	B-7
R4817	B-7
R4818	B-7
R4819	B-7
R4820	A-7
R4821	A-7
R4822	A-7
R4823	E-9
R4824	F-9
R4825	B-7
R4826	B-7
R4827	B-7
R4828	B-7
R4829	B-7
R4830	B-7
R4832	C-7
R4833	A-6
R4834	A-6
R4835	A-6
R4836	A-6
R4837	C-6
R4838	C-6
R4839	C-6
R4840	C-6
R4841	A-7
R4842	A-7
R4843	A-7
R4844	A-7
R4846	A-6
R4848	A-6
R4849	A-6
R4852	A-5
R4853	A-5
R4855	C-7
R4856	E-9
R4861	A-6
R4862	A-6
R4863	C-6
R4864	C-6
R4866	C-6
R4867	A-6
R4868	A-6
R4869	A-6
R4871	C-6
R4872	C-6
R4873	C-6
R4874	B-5
R4875	B-5
R4877	B-5
R4878	B-5
R4879	B-5
R4880	B-5
R4881	B-5
R4882	B-5
R4883	B-5
R4884	B-5
R4885	A-5
R4886	A-5
R4887	A-5
R4888	A-5
R4892	A-5
R4894	B-5
R4895	A-7
R4897	A-6
R4901	F-7
R4902	G-7
R4903	G-7
R4904	F-9
R4906	G-7
R4908	E-8
R4910	E-8
R4911	E-8
R4912	E-8
R4913	E-8
R4914	E-8
R4915	G-8
R4916	G-8
R4917	E-8
R4918	G-8
R4919	G-7
R4920	F-9
R4921	F-9
R4922	F-9
R4923	F-9
R4924	F-9
R4925	F-9
R4926	F-9
R4927	F-9
R4928	F-9
R4929	F-9
R4930	F-9
R4931	F-9
R4932	F-9
R4933	F-9
R4934	F-9
R4935	G-8
R4936	G-8
R4938	F-9
R4939	F-9
R4940	F-9
R4941	F-9
R4942	F-9
R4943	G-9
R4944	F-9
R5701	E-2
R5702	E-2
R5707	E-2
R5708	E-2
R5709	E-2
R5710	E-2
R5711	G-3
R5712	G-3
R5714	E-3
R5715	E-3
R5717	G-3
R5718	G-3
R5719	G-3
R5720	E-3
R5721	E-3
R5722	E-3
R5723	E-3
R5724	F-4
R5725	F-4
R5730	F-4
R5731	F-1
R5732	F-1
R5733	F-4
R5735	E-1
R5736	E-1
R5737	E-1
R5738	E-1
R5739	E-1
R5740	E-1
R5741	E-1
R5742	G-3
R5743	G-3
R5744	G-3
R5745	G-3
R5746	G-3
X1501	B-3
X3301	F-4
X4801	C-6
X4901	G-7

SE-104/113 BOARD (SIDE A)

Ref. No.	Location
C201	D-2
C202	D-2
C203	D-2
C204	B-2
C207	G-2
C208	G-2
C209	F-2
C210	F-2
C211	F-2
C212	E-2
C214	F-2
C223	B-2
C225	A-2
C226	A-2
CN201	E-3
D212	A-2
IC201	F-2
J201	B-3
J202	D-3
R201	D-2
R202	D-2
R203	D-2
R204	D-2
R205	E-2
R206	G-3
R207	G-3
R208	F-3
R209	F-3
R211	F-3
R213	C-3
R214	C-2
R217	C-3
R224	A-2
R225	A-2
R226	B-2
SE201	D-2
SE202	C-2

SE-104/113 BOARD (SIDE B)

Ref. No.	Location
C220	G-3
C221	G-3
CN202	F-2
D211	D-2
L201	G-2
R212	C-2
R215	C-3
R218	D-3
R219	D-2
R220	D-3
VDR001	D-3

MI-37 BOARD (SIDE A)

Ref. No.	Location
C3905	A-3
C3906	A-3
C3908	A-3
C3910	A-3
C3912	B-3
C3913	B-3
C3914	B-3
C3917	B-3
C3918	B-3
C3921	B-2
C3923	B-2
C3924	A-3
C3926	A-3
C3927	A-2
C3929	A-3
C3935	A-3
C3936	A-2
C5806	A-1
C5807	A-1
C5808	B-1
C5809	B-1
C5813	A-1
C5814	B-1
C5815	B-1
C5816	B-1
C5817	A-1
C5819	B-1
C5820	A-1
C5822	A-1
C5823	B-1
C5824	A-1
C5825	B-1
C5826	A-2
C5827	B-1
C5829	B-1
C5830	A-2
C5832	A-2
C5833	A-2
C5835	B-1
C5836	B-1
C5838	A-2
C5839	B-2
C5840	A-2
C5841	A-2
D3900	B-3
D3901	B-1
IC3900	B-3
IC3901	A-3
IC5801	A-1
L3902	B-3
L3903	B-2
L3904	B-2
L5803	A-2
Q3901	B-1
Q3902	A-2
Q3903	A-2
R3900	B-3
R3912	B-3
R3913	B-3
R3916	A-3
R3919	A-3
R3920	A-3
R3921	A-3
R3922	A-2
R3923	A-2
R3924	A-3
R3936	A-2
R5801	B-1
R5802	B-1
R5803	B-1
R5804	A-2
R5807	A-1
R5809	A-1
R5814	B-1
R5815	A-1
R5816	B-1
R5817	A-1
R5818	B-1
R5819	A-1
R5820	A-2
R5821	B-1
R5822	B-1
R5823	A-2
R5824	A-2
R5825	B-1
R5826	B-1
R5827	A-2
R5828	B-1
R5829	A-2
R5831	A-2
R5834	A-2

MI-37 BOARD (SIDE B)

Ref. No.	Location
C3900	B-3
C3901	A-3
C3902	A-3
C3904	A-3
C3907	B-2
C3909	B-3
C3911	B-3
C3915	A-3
C3916	A-3
C3919	A-3
C3920	A-3
C3922	A-2
C3925	A-3
C3928	B-3
C3931	B-2
C3933	B-2
C3934	A-3
C5810	A-1
C5812	A-1
CN5801	A-1
CN5802	A-2
CN5803	A-2
CN5804	B-3
D3903	B-3
D3904	B-2
D5806	A-1
D5807	B-1
F3900	B-2
L3900	B-3
L3901	B-3
R3901	B-2
R3902	B-2
R3903	B-3
R3904	B-3
R3905	A-3
R3906	B-2
R3908	B-3
R3909	A-3
R3910	A-2
R3911	A-3
R3917	A-3
R3918	A-3
R3938	B-2
R3939	B-2
R5805	A-1
R5806	A-1
R5835	A-1
R5836	A-1
R5837	A-1
R5840	A-1
R5841	A-1
R5845	A-2
VDR801	A-2
VDR803	A-1

CF-69 BOARD (SIDE A)

CN003	E-1
CN008	B-1
D009	E-4
R001	D-6
R002	B-5
R003	C-6
R004	D-7
R005	E-3
R006	D-6
R007	B-5
R008	C-6
R009	D-7
R014	D-7
R015	D-6
R016	B-5
R017	C-6
R020	D-6
R021	A-6
R022	C-5
R023	D-7
R024	D-5
R025	B-6
R026	C-5
R027	C-7
R030	B-6
R031	D-4
R032	B-7
R038	B-6
R039	D-4
R040	A-7
R052	B-5
R053	B-5
R054	C-1
S001	C-6
S003	D-6
S005	C-5
S006	E-7
S007	D-6
S009	C-5
S010	D-5
S013	C-7
S014	D-4
S016	C-4
S017	C-7
S019	B-7
S020	A-7

CF-69 BOARD (SIDE B)

BH001	B-3
C001	E-1
CN001	B-4
CN002	E-1
CN004	C-1
CN005	B-1
CN007	B-2
D001	E-1
D005	A-7
D006	A-7
D008	A-3
Q002	C-6
Q003	C-6
R010	C-6
R011	C-6
R012	C-6
R013	C-6
R019	C-6
R047	C-6
R048	A-3

CF-71 BOARD (SIDE A)

BH001	C-6
BZ001	D-3
C005	D-5
CN006	B-5
D002	D-8
D004	D-6
D005	D-6
D007	E-6
IC002	D-5
R011	C-7
R012	C-8
R013	D-3
R016	C-8
R018	D-3
R019	D-6
R021	D-3
R022	C-8
R023	D-8
R024	D-2
R026	D-2
R027	D-2
R032	D-2
R033	C-1
R044	B-6
R045	B-6
R052	D-6
S001	C-4
S002	C-7
S003	D-6
S004	C-9
S005	B-8
S008	D-7
S009	C-6
S010	C-2
S011	C-1

CF-71 BOARD (SIDE B)

CN001	B-5
CN005	C-4
CN008	E-2
D001	B-6
Q002	B-7
Q003	B-7
R001	B-7
R002	B-7
R003	B-7
R004	B-7
R005	C-6
R006	C-6
R007	C-6
R009	B-7
R010	C-7
R017	B-8
R020	A-8
R025	C-6
R046	C-6
S006	A-8
S007	B-8

PD-117 BOARD (SIDE A)

C5504	B-4
C5505	D-5
C5506	D-5
C5507	D-5
C5515	B-4
C5516	B-4
C5520	C-5
C5521	C-3
C5522	C-3
C5523	A-4
C5524	C-4
C5528	C-4
C5530	B-5
C5531	A-5
C5603	C-2
C5607	A-1
CN5501	A-5
CN5502	C-5
CN5604	A-1
CN5701	D-2
CN5702	D-5
CN5703	D-1
CN5704	D-3
CN5705	D-3
D5502	B-4
FB5502	C-4
IC5502	B-4
IC5503	B-4
L5505	B-4
L5601	A-2
Q5502	C-4
Q5503	B-5
Q5504	B-5
Q5505	B-5
Q5506	B-5
R5512	B-4
R5513	B-4
R5516	C-5
R5517	B-5
R5521	B-5
R5553	B-5
R5559	B-4
R5562	B-5
R5563	B-5
R5564	B-5
R5565	B-5
R5566	A-5
R5567	B-5
R5568	C-3
R5569	C-5
R5702	C-5
T5601	B-1

PD-117 BOARD (SIDE B)

C5501	D-4
C5503	D-5
C5508	B-4
C5509	C-4
C5510	C-5
C5511	C-4
C5512	C-4
C5513	C-5
C5514	B-4
C5517	B-5
C5518	B-5
C5519	B-4
C5527	C-5
C5529	B-4
C5602	C-2
C5604	B-2
C5605	A-2
C5606	A-2
C5608	C-2
C5704	C-3
D5503	B-4
D5601	A-2
D5602	A-1
FB5503	C-4
IC5501	C-4
IC5601	B-3
IC5602	A-2
IC5701	C-3
L5501	D-4
L5504	B-4
Q5501	B-4
Q5601	B-3
Q5602	B-2
Q5603	A-2
Q5604	A-2
R5501	D-5
R5503	D-4
R5504	B-4
R5505	C-5
R5506	C-4
R5507	C-4
R5508	C-4
R5509	C-4
R5510	C-4
R5511	C-4
R5514	B-5
R5515	A-5
R5518	B-5
R5519	A-4
R5520	A-4
R5522	A-5
R5523	B-5
R5524	B-5
R5525	B-5
R5551	B-4
R5557	D-4
R5560	B-4
R5608	B-3
R5609	B-3
R5610	B-2
R5611	A-2
R5612	A-2
R5613	B-2
R5614	B-3
R5616	A-2
R5617	A-2
R5618	A-2
R5704	A-5
R5706	B-5
R5707	D-5
R5708	D-5
R5711	D-3
R5712	C-3
R5714	D-3
S5701	A-5
S5702	B-5
S5703	C-5
S5704	D-5

SECTION 5
ADJUSTMENTS

1. Before starting adjustment

EVR Data Re-writing Procedure When Replacing Board

The data that is stored in the repair board, is not necessarily correct.
Perform either procedure 1 or procedure 2 or procedure 3 when replacing board.

Procedure 1

Save the EVR data of the machine in which a board is going to be replaced. Download the saved data after a board is replaced.

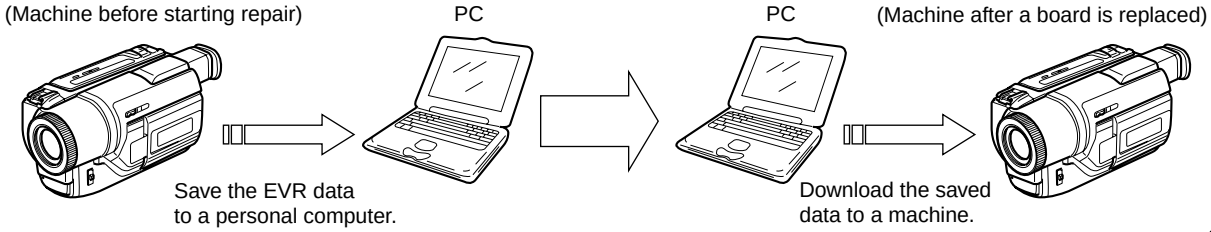

Procedure 2

Remove the EEPROM from the board of the machine that is going to be repaired. Install the removed EEPROM to the replaced board.

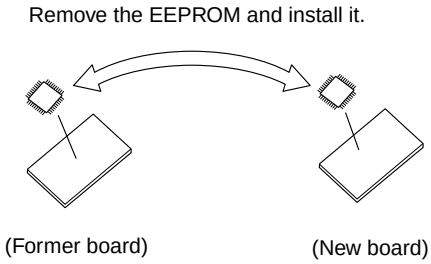

Procedure 3

When the data cannot be saved due to defective EEPROM, or when the EEPROM cannot be removed or installed, save the data from the same model of the same destination, and download it.

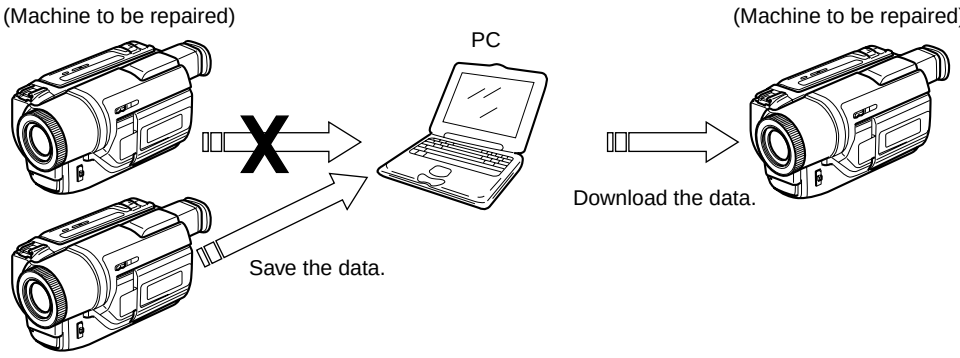

After the EVR data is saved and downloaded, check the respective items of the EVR data.
(Refer to page 5-3 for the items to be checked)

1-1. Adjusting items when replacing main parts and boards

• Adjusting items when replacing main parts

When replacing main parts, adjust the items indicated by ● in the following table.

Adjustment Section	Adjustment	Replaced part: Block replacement: Lens device	Mechanism deck	B/W EVF block V901 (Picture tube)	LCD block LCD901 (LCD panel)	LCD block ND901 (Fluorescent tube)	Mechanism deck M901 (Drum assembly)	Mechanism deck M902 (Capstan motor)	Mounted part replacement: CD-242/244/269 board IC101/151 (CCD imager)	SE-104/113 board SE201/202 (PITCH, YAW sensor)	VF-129 board IC901 (CRT driver)	VF-129 board T901 (FBT)	PD-117 board IC5501 (RGB driver)	PD-117 board IC5502 (Timing generator)	VC-235 board IC1502 (S/H, AGC, A/D CONV.)	VC-235 board IC3103 (REC/PB AMP)	VC-235 board IC3101 (EQ, A/D CONV., PLL)	VC-235 board IC1501 (Timing generator)	VC-235 board IC3701 (VIDEO IN/OUT)	VC-235 board IC3301 (VIDEO DSP, D/A CONV.)	VC-235 board IC2201 (Y/C process)	MI-37 board IC3901 (IR transmitter)	VC-235 board IC5701 (AUDIO IN/OUT)
Initialization of 7, 8, C, D, E, F page data	Initialization of 8, C, D page data																						
	Initialization of 7, E, F page data																						
Camera	HALL adj.	●																					
	Flange back adj.	●							●														
	Optical axis adj.	●							●														
	Color reproduction adj.								●						●								
	AWB & LV standard data input								●						●								
	Auto white balance adj.								●						●								
	Angular velocity sensor sensitivity data preset									●													
B/W EVF	Centering adj.			●							●	●											
	Focus adj.			●							●	●											
	Aberration adj.			●							●	●											
	Horizontal amplitude adj.			●							●	●											
	Vertical amplitude adj.			●							●	●											
	Brightness adj.			●							●	●											
LCD (Note 1)	LCD initial data input																						
	VCO adj.												●	●									
	RGB AMP adj.												●							●			
	Contrast adj.												●							●			
	COM AMP adj.												●										
	V-COM adj.				●								●										
	White balance adj.				●	●							●										
System control	Node unique ID No. input																						
	Battery end adj.																						
Servo, RF	Reel FG adj.		●																				
	Switching position adj.		●				●																
	AGC center level adj.															●	●						
	APC & AEQ adj.															●	●						
	PLL f_0 & LPF f_0 adj.															●	●						
	Hi8/Standard8 switching position adj.		●				●																
	CAP FG duty adj.		●					●															
Video	27MHz/36MHz origin oscillation adj.																	●					
	Chroma BPF f_0 adj.																		●				
	S VIDEO OUT Y level adj.																		●	●			
	S VIDEO OUT chroma level adj.																		●	●			
	Hi8/Standard8 AFC f_0 adj.																				●		
IR	IR video carrier frequency adj.																					●	
	IR video deviation adj.																					●	
	IR audio deviation adj.																					●	
Audio	Hi8/Standard8 AFM BPF f_0 adj.																						●
	Hi8/Standard8 AFM 1.5MHz deviation adj.																						●
	Hi8/Standard8 AFM 1.7MHz deviation adj.																						●
Mechanism	Tape path adj.		●				●	●															

Table 5-1-1(1)

• Adjusting items when replacing a board or EEPROM

When replacing a board or EEPROM, adjust the items indicated by ● in the following table.

Adjustment Section	Adjustment	Replaced part: Block replacement: SE-104/113 board (COMPLETE)	VF-129 board (COMPLETE)	PD-117 board (COMPLETE)	MI-37 board (COMPLETE)	VC-235 board (COMPLETE)	VC-235 board IC4502 (EEP ROM)	VC-235 board IC4901 (EEP ROM)
Initialization of 7, 8, C, D, E, F page data	Initialization of 8, C, D page data						●	
	Initialization of 7, E, F page data							●
Camera	HALL adj.					●		●
	Flange back adj.					●		●
	Optical axis adj.					●		●
	Color reproduction adj.					●		●
	AWB & LV standard data input					●		●
	Auto white balance adj.					●		●
	Angular velocity sensor sensitivity data preset	●				●		●
B/W EVF	Centering adj.		●					
	Focus adj.		●					
	Aberration adj.		●					
	Horizontal amplitude adj.		●					
	Vertical amplitude adj.		●					
	Brightness adj.		●					
LCD (Note 1)	LCD initial data input					●	●	
	VCO adj.			●		●	●	
	RGB AMP adj.			●		●	●	
	Contrast adj.			●		●	●	
	COM AMP adj.			●		●	●	
	V-COM adj.			●		●	●	
	White balance adj.			●		●	●	
System control	Node unique ID No. input					●	●	
	Battery end adj.					●	●	
Servo, RF	Reel FG adj.					●	●	
	Switching position adj.					●	●	
	AGC center level adj.						●	
	APC & AEQ adj.						●	
	PLL f_0 & LPF f_0 adj.						●	
	Hi8/Standard8 switching position adj.					●		●
	CAP FG duty adj.					●		●
Video	27MHz/36MHz origin oscillation adj.							●
	Chroma BPF f_0 adj.						●	
	S VIDEO OUT Y level adj.						●	
	S VIDEO OUT chroma level adj.						●	
	Hi8/Standard8 AFC f_0 adj.							●
IR	IR video carrier frequency adj.				●	●		●
	IR video deviation adj.				●	●		●
	IR audio deviation adj.				●	●		●
Audio	Hi8/Standard8 AFM BPF f_0 adj.							●
	Hi8/Standard8 AFM 1.5MHz deviation adj.							●
	Hi8/Standard8 AFM 1.7MHz deviation adj.							●
Mechanism	Tape path adj.							

Table 5-1-1(2)

Note 1: TRV model (DCR-TRV120/TRV120E/TRV120P/TRV125E) only.

Note 2: 720H model: DCR-TRV120/TRV120P
960H (TRV) model: DCR-TRV120E/TRV125E
960H (TR) model: DCR-TR8000E/TR8100E

	CD board
720H model	CD-242
960H (TRV) model	CD-244
960H (TR) model	CD-269

Note 3: TRV model: DCR-TRV120/TRV120E/TRV120P/TRV125E
TR model: DCR-TR8000E/TR8100E

	SE board	PD board
TRV model	SE-104	PD-117
TR model	SE-113	—

5-1. CAMERA SECTION ADJUSTMENT

1-1. PREPARATIONS BEFORE ADJUSTMENT (CAMERA SECTION)

1-1-1. List of Service Tools

• Oscilloscope • Color monitor • Vectorscope
• Regulated power supply • Digital voltmeter • Frequency counter

Ref. No.	Name	Parts Code	Usage
J-1	Filter for color temperature correction (C14)	J-6080-058-A	Auto white balance adjustment/check White balance adjustment/check
J-2	ND filter 1.0	J-6080-808-A	White balance check
	ND filter 0.4	J-6080-806-A	White balance check
	ND filter 0.1	J-6080-807-A	White balance check
J-3	Pattern box PTB-450	J-6020-200-A	
J-4	Color chart for pattern box	J-6020-250-A	
J-5	Adjustment remote commander (RM-95 upgraded). (Note 1)	J-6082-053-B	
J-6	Siemens star chart	J-6080-875-A	For checking the flange back
J-7	Clear chart for pattern box	J-6080-621-A	
J-8	Multi CPC jig	J-6082-311-A	For adjusting the LCD block
J-9	CPC-13 jig	J-6082-443-A	For adjusting the video section
J-10	Power cord (Note 2)	J-6082-223-A	For connecting the battery terminal and DC power supply
J-11	Extension cable (16P, 0.5 mm)	J-6082-357-A	For extension between the CD-242 board (CN101) and the VC-235 board (CN1501)(720H model) For extension between the CD-244/269 board (CN151) and the VC-235 board (CN1501)(960H model)
J-12	IR receiver jig	J-6082-383-A	For adjusting the IR transmitter
J-13	Mini pattern box	J-6082-353-B	For adjusting the flange back
J-14	Camera table	J-6082-384-A	For adjusting the flange back

Note 1: If the micro processor IC in the adjustment remote commander is not the new micro processor (UPD7503G-C56-12), the pages cannot be switched. In this case, replace with the new micro processor (8-759-148-35).

Note 2: Connect the adjustment remote commander to the LANC jack, and set to HOLD switch to the “ADJ” side.

Note 3: 720H model: DCR-TRV120/TRV120P
960H model: DCR-TRV120E/TRV125E/TR8000E/TR8100E

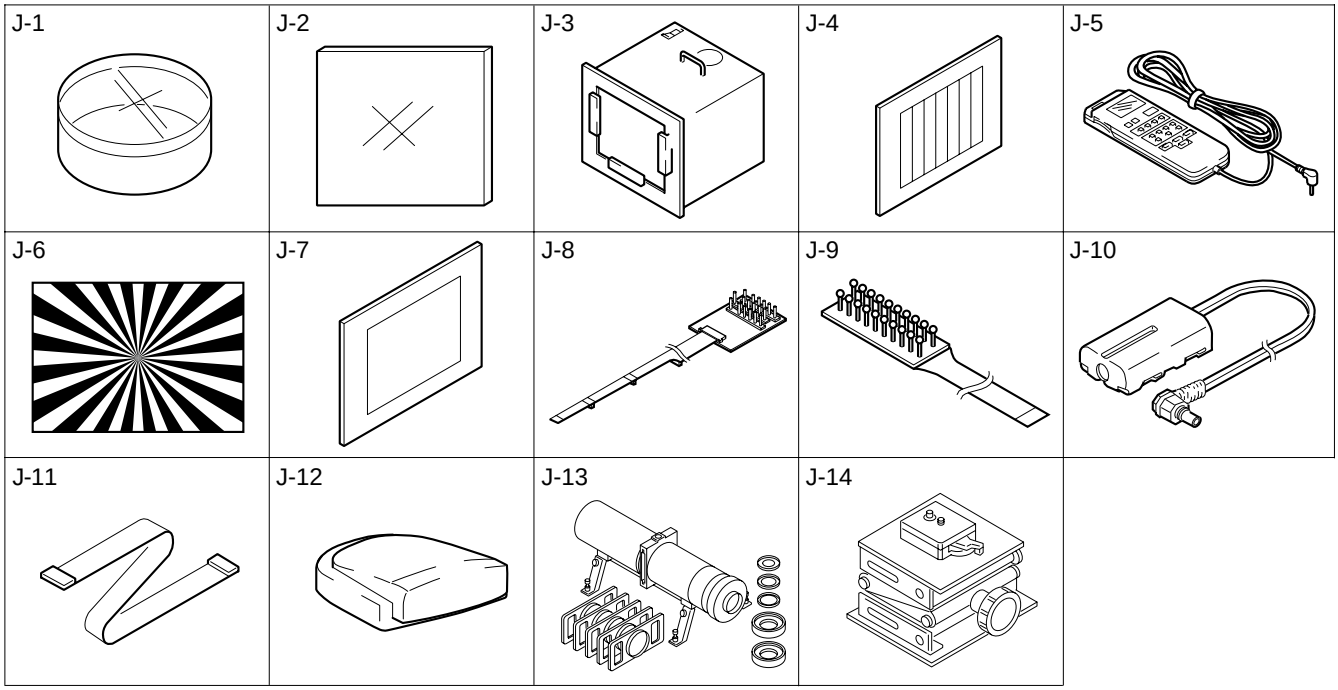

Fig. 5-1-1

1-1-2. Preparations

Note 1: For details of how remove the cabinet and boards, refer to "2. DISASSEMBLY".

Note 2: When performing only the adjustments, the lens block and boards need not be disassembled.

Note 3: TRV model: DCR-TRV120/TRV120E/TRV120P/TRV125E
TR model: DCR-TR8000E/TR8100E

	CF board
TRV model	CF-69
TR model	CF-71

1) Connect the equipment for adjustments according to Fig. 5-1-3, 4.
2) The front panel block (MI-37 board, focus dial, microphone unit) must be assembled because the focus ring is used for adjustments.

Note 4: As removing the cabinet (R) (removing the VC-235 board CN1105) means removing the lithium 3V power supply (CF-69/71 board BH001), data such as date, time, user-set menus will be lost. After completing adjustments, reset these data. If the cabinet (R) has been removed, the self-diagnosis data, data on history of use (total drum rotation time, etc.) will be lost. Before removing, note down the self-diagnosis data and data on history use (data of page: 2, address: A2 to AA). (Refer to "SELF-DIAGNOSIS FUNCTION" for the self-diagnosis data, and to "5-4. Service Mode" for the data on the history use.)

Note 5: Setting the "Forced Camera Power ON" Mode
1) Select page: 0, address: 01, and set data: 01.
2) Select page: D, address: 10, set data: 01, and press the PAUSE button of the adjustment remote commander.
The above procedure will enable the camera power to be turned on with the power switch (SS-10000 block) removed. After completing adjustments, be sure to exit the "Forced Camera Power ON Mode".

Note 6: Exiting the "Forced Camera Power ON" Mode
1) Select page: 0, address: 01, and set data: 01.
2) Select page: D, address: 10, set data: 00, and press the PAUSE button of the adjustment remote commander.
3) Select page: 0, address: 01, and set data: 00.

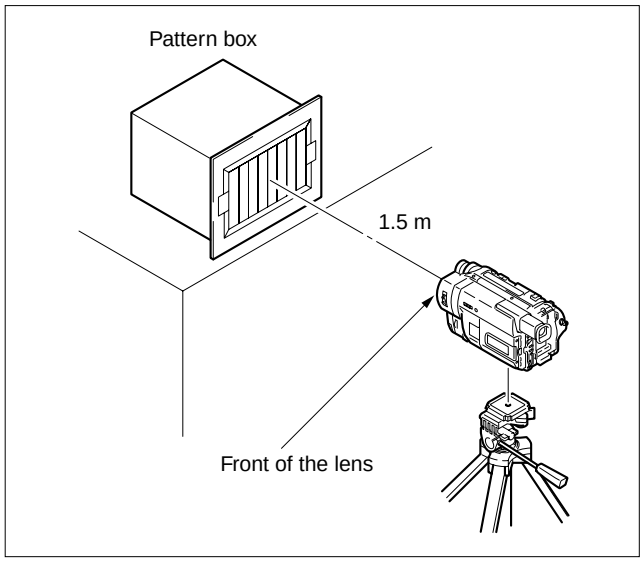

Fig. 5-1-2

TR model

Note 1: Press the battery switch of the battery terminal using adhesive tape, etc.

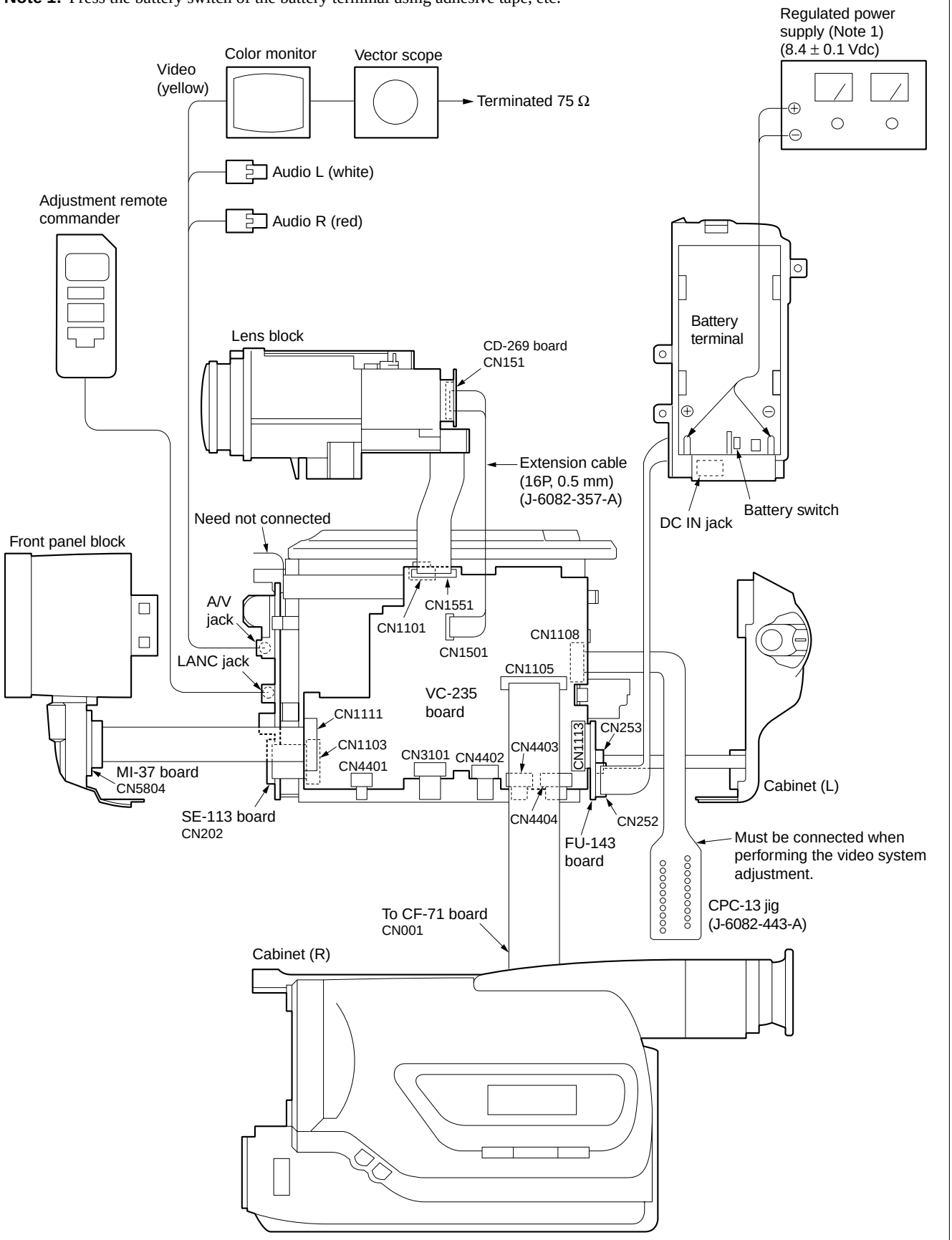

Fig. 5-1-3

TRV model

Note 1: Press the battery switch of the battery terminal using adhesive tape, etc.
Note 2: 720H model: DCR-TRV120/TRV120P
960H model: DCR-TR120E/TRV125E

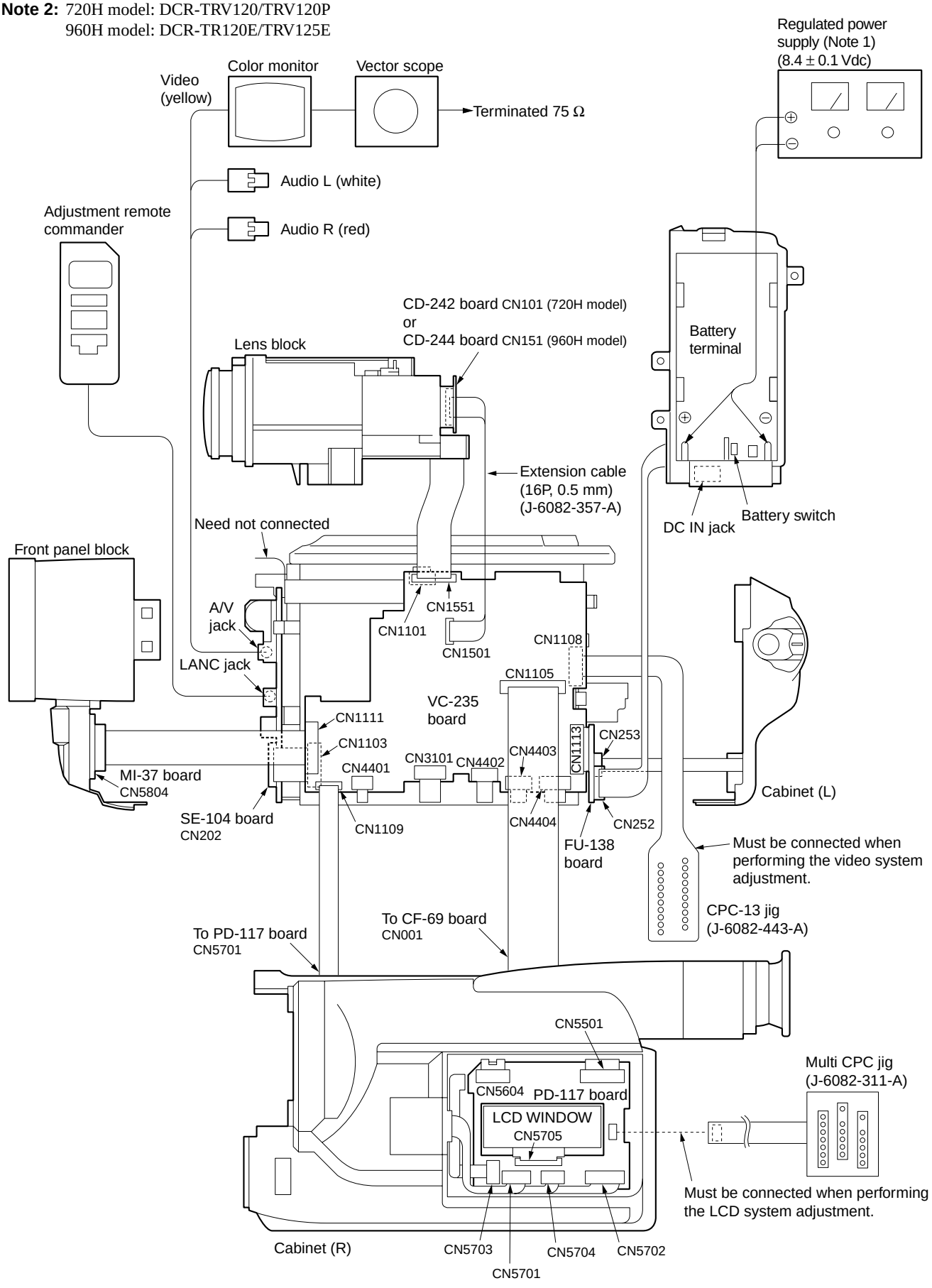

Fig. 5-1-4

1-1-3. Precaution

1. Setting the Switch

Unless otherwise specified, set the switches as follows and perform adjustments without loading cassette.

Note: TRV model: DCR-TRV120/TRV120E/TRV120P/TRV125E

1. POWER switch (SS-10000 block) ..... CAMERA
2. NIGHT SHOT switch (Lens block) ..... OFF
3. DEMO MODE (Menu display) ..... OFF
4. DIGITAL ZOOM (Menu display) ..... OFF
5. STEADY SHOT (Menu display) ..... OFF
6. DISPLAY (Menu display) (TRV model) ..... V-OUT/LCD
7. DISPLAY (CF-69 board) (TRV model) ..... ON
8. FOCUS switch (MF-10000) ..... MANUAL
9. PROGRAM AE (CF-69/71 board) ..... Auto
10. BACK LIGHT (CF-69/71 board) ..... OFF
11. PICTURE EFFECT (CF69/71 board) ..... OFF
12. DIGITAL EFFECT (CF-69/71 board) ..... OFF
13. 16 : 9 WIDE (MENU display) ..... OFF

2. Order of Adjustments

Basically carry out adjustments in the order given.

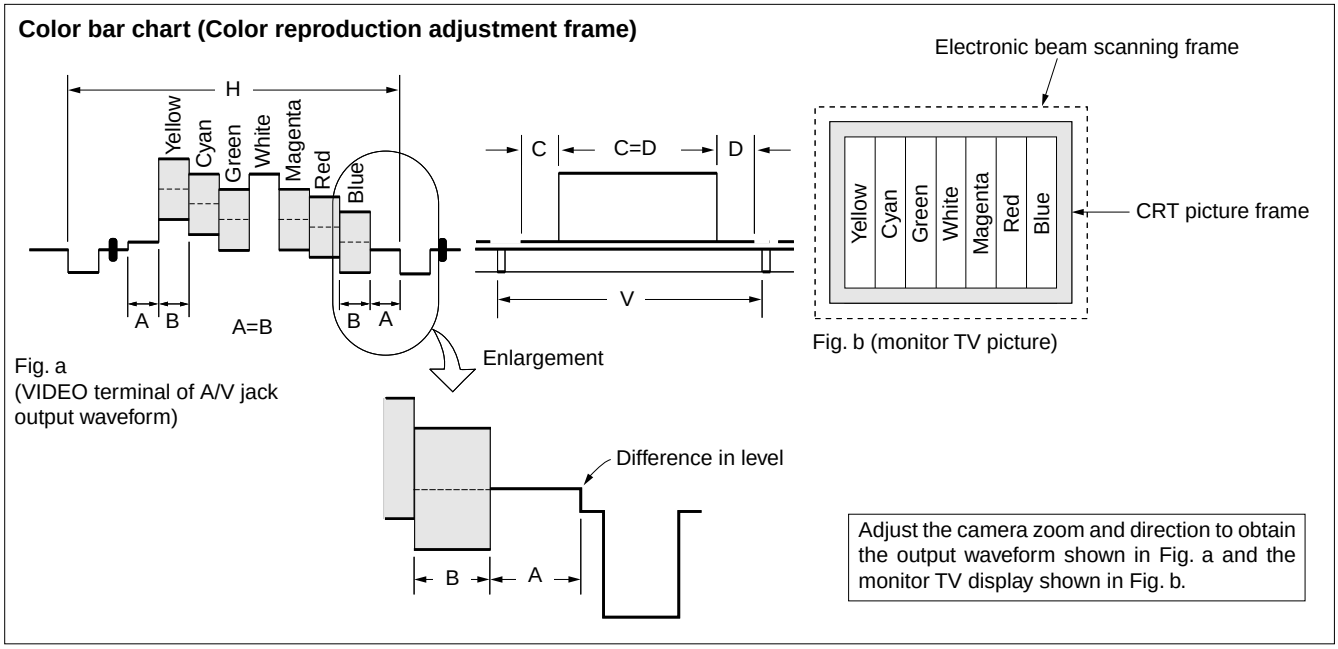

Fig. 5-1-5

3. Subjects

1) Color bar chart (Color reproduction adjustment frame)
   When performing adjustments using the color bar chart, adjust the picture frame as shown in Fig. 5-1-5. (Color reproduction adjustment frame)
2) Clear chart (Color reproduction adjustment frame)
   Remove the color bar chart from the pattern box and insert a clear chart in its place. (Do not perform zoom operations during this time)
3) Chart for flange back adjustment
   Join together a piece of white A0 size paper (1189mm × 841 mm) and a piece of black paper to make the chart shown in Fig. 5-1-6.

Note: Use a non-reflecting and non-glazing vellum paper. The size must be A0 or larger and the joint between the white and black paper must not have any undulations.

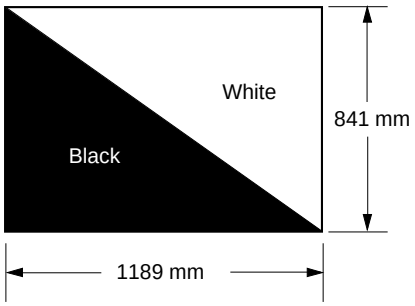

Fig. 5-1-6

1-2. INITIALIZATION OF 7, 8, C, D, E, F PAGE DATA

1-2-1. INITIALIZATION OF 8, C, D PAGE DATA

1. Initializing the 8, C, D Page Data

Note1: If "Initialization of Pages 8, C, D" is executed, all data on pages 8, C and D are initialized. (Only an individual page cannot be initialized)

Note2: If the 8, C, D page data has been initialized, "Modification of 8, C, D Page Data" and following adjustments need to be performed again.

1) LCD system adjustment
2) System control system adjustment
3) Servo and RF system adjustment
4) "Chroma BPF f_0 adjustment", "S VIDEO OUT Y level adjustment" and "S VIDEO OUT chroma level adjustment" of the video system adjustments.

Adjusting Page	8
Adjusting Address	00 to FF
Adjusting Page	C
Adjusting Address	10 to FF
Adjusting Page	D
Adjusting Address	10 to FF

Initializing Method:

1) Select page: 0, address: 01, and set data: 80.
2) Select page: 3, address: 81, set data: 10, and press the PAUSE button of the adjustment remote commander.
3) Select page: 3, address: 80, set data: 0A, and press the PAUSE button of the adjustment remote commander.
4) Select page: 3, address: 80, and check that the data changes to "1A".
5) Select page: D, address: 2D, set data: 00, and press the PAUSE button of the adjustment remote commander.
6) Select page: 0, address: 01, and set data: 00.
7) Perform "Modification of 8, C, D Page Data".

2. Modification of 8, C, D Page Data

If the 8, C, D page data has been initialized, change the data of the "Fixed data-2" address shown in the following table by manual input.

Modifying Method:

1) Before changing the data, select page: 0, address: 01, and set data: 01.
2) New data for changing are not shown in the tables because they are different in destination. When changing the data, copy the data built in the same model.
   Note : If copy the data built in the different model, the camcorder may not operate.
3) When changing the data, press the PAUSE button of the adjustment remote commander each time when setting new data to write the data in the non-volatile memory.
4) Check that the data of adjustment addresses is the initial value. If not, change the data to the initial value.

Processing after Completing Modification of D Page data

1) Select page: 2, address: 00, and set data: 29.
2) Select page: 2, address: 01, and set data: 29, and press the PAUSE button of the adjustment remote commander.
3) Select page: 0, address: 01, and set data: 00.

3. 8 Page Table

Note1: Fixed data-1: Initialized data. (Refer to "1. Initializing the 8, C, D Page Data")

Note2: Fixed data-2: Modified data. (Refer to "2. Modified of 8, C, D Page Data")

Address	Initial value		Remark
	NTSC	PAL	
00 to 98			Fixed data-1 (Initialized data)
99			Fixed data-2
9A to A2			Fixed data-1 (Initialized data)
A3			Fixed data-2
A4 to FF			Fixed data-1 (Initialized data)

4. C Page Table

Note1: Fixed data-1: Initialized data. (Refer to "1. Initializing the 8, C, D Page Data")

Note2: Fixed data-2: Modified data. (Refer to "2. Modified of 8, C, D Page Data")

Address	Initial value		Remark
	NTSC	PAL	
00 to 0F			
10	EE	EE	Switching position adj.
11	00	00	
12	00	00	
13	00	00	
14 to 16			Fixed data-1 (Initialized data)
17	E0	E0	Reel FG adj.
18	25	25	APC & AEQ adj.
19	25	25	
1A			Fixed data-1 (Initialized data)
1B	25	25	APC & AEQ adj.
1C	25	25	
1D			Fixed data-1 (Initialized data)
1E	25	25	AGC center level adj.
1F	3E	3E	PLL f_0 & LPF f_0 adj.
20	3E	3E	
21	CA	CA	APC & AEQ adj.
22	99	99	PLL f_0 & LPF f_0 adj.
23, 24			Fixed data-1 (Initialized data)
25	88	88	S VIDEO OUT Y level adj.
26	E3	E3	S VIDEO OUT chroma level adj.
27	A1	A1	
28	04	04	Chroma BPF f_0 adj.
29	20	20	PLL f_0 & LPF f_0 adj.
2A, 2B			Fixed data-1 (Initialized data)
2C	03	03	APC & AEQ adj.
2D, 2E			Fixed data-1 (Initialized data)
2F			Fixed data-2
30	E0	E0	Reel FG adj.
31 to 85			Fixed data-1 (Initialized data)
86			Fixed data-2
87, 88			Fixed data-1 (Initialized data)
89			Fixed data-2
8A to 91			Fixed data-1 (Initialized data)
92			Fixed data-2
93 to 99			Fixed data-1 (Initialized data)
9A			Fixed data-2
9B to A4			Fixed data-1 (Initialized data)
A5			Fixed data-2
A6			
A7 to D5			Fixed data-1 (Initialized data)
D6			Fixed data-2
D7			
D8			
D9			
DA			
DB			
DC			
DD			
DE			
DF			
E0			

Address	Initial value		Remark
	NTSC	PAL	
E1 to E5			Fixed data-1 (Initialized data)
E6			Fixed data-2
E7			Fixed data-1 (Initialized data)
E8	08	08	Node unique ID No. input
E9	00	00	
EA	46	46	
EB	01	01	
EC	01	01	
ED	00	00	
EE	00	00	
EF	00	00	
F0 to F3			Fixed data-1 (Initialized data)
F4	00	00	Emergency memory address
F5	00	00	
F6	00	00	
F7	00	00	
F8	00	00	
F9	00	00	
FA	00	00	
FB	00	00	
FC	00	00	
FD	00	00	
FE	00	00	
FF	00	00	

5. D Page Table

Note1: Fixed data-1: Initialized data. (Refer to "1. Initializing the 8, C, D Page Data")

Note2: Fixed data-2: Modified data. (Refer to "2. Modified of 8, C, D Page Data")

Address	Initial value		Remark
	NTSC	PAL	
00 to 0F			
10	00	00	Test mode
11, 12			Fixed data-1 (Initialized data)
13			Fixed data-2
14			
15 to 1A			Fixed data-1 (Initialized data)
1B			Fixed data-2
1C			Fixed data-1 (Initialized data)
1D			Fixed data-2
1E, 1F			Fixed data-1 (Initialized data)
20			Fixed data-2
21, 22			Fixed data-1 (Initialized data)
23			Fixed data-2
24 to 26			Fixed data-1 (Initialized data)
27			Fixed data-2
28 to 2B			Fixed data-1 (Initialized data)
2C			Fixed data-2
2D			
2E to 42			Fixed data-1 (Initialized data)
43			Fixed data-2
44			
45			
46, 47			Fixed data-1 (Initialized data)
48	90	90	Battery end adj.
49	98	98	
4A to 4C			Fixed data-1 (Initialized data)
4D			Fixed data-2
4E to 50			Fixed data-1 (Initialized data)
51			Fixed data-2
52			Fixed data-1 (Initialized data)
53			Fixed data-2
54 to 57			Fixed data-1 (Initialized data)
58			Fixed data-2
59			Fixed data-1 (Initialized data)
5A			Fixed data-2
5B			
5C			
5D to 65			Fixed data-1 (Initialized data)
66			Fixed data-2
67			
68			
69			
6A to 83			Fixed data-1 (Initialized data)
84			Fixed data-2
85, 86			Fixed data-1 (Initialized data)
87			Fixed data-2
88 to 8D			Fixed data-1 (Initialized data)
8E			Fixed data-2
8F			

Address	Initial value		Remark
	NTSC	PAL	
90 to A1			Fixed data-1 (Initialized data)
A2	80	80	VCO adj.
A3	–	70	Fixed data-1 (NTSC model) / VCO adj. (PAL model)
A4	80	80	V-COM adj.
A5	30	30/20	RGB AMP adj. (Note 3)
A6			Fixed data-1 (Initialized data)
A7	C0	C0/80	COM AMP adj. (Note 3)
A8	80	80	White balance adj.
A9	80	80	
AA	50	50/30	Contrast adj. (Note 3)
AB			Fixed data-1 (Initialized data)
AC			Fixed data-2
AD			
AE to B3			Fixed data-1 (Initialized data)
B4			Fixed data-2
B5			
B6			
B7, B8			Fixed data-1 (Initialized data)
B9			Fixed data-2
BA			
BB to C3			Fixed data-1 (Initialized data)
C4			Fixed data-2
C5			Fixed data-1 (Initialized data)
C6			Fixed data-2
C7 to FF			Fixed data-1 (Initialized data)

Note 3: TYPE S 123 k/ TYPE C
TYPE S 123 k model: DCR-TRV120E: AEP, UK, EE, NE, RU/TRV125E
TYPE C model: DCR-TRV120E: E, HK, AUS, CN, JE

1-2-2. INITIALIZATION OF 7, E, F PAGE DATA

1. Initializing the 7, E, F Page Data

Note1: If "Initialization of Pages 7, E, F" is executed, all data on pages 7, E and F are initialized. (Only an individual page cannot be initialized)

Note2: If the 7, E, F page data has been initialized, "Modification of 7, E, F Page Data" and following adjustments need to be performed again.

1) Camera system adjustments
2) "Hi8/standard 8 mm switching position adjustment" and "CAP FG duty adjustment" of the servo & RF system adjustments
3) "27 MHz/36 MHz origin oscillation adjustment" and "Hi8/standard 8 mm AFC f_0 adjustment" of the video system adjustment
4) IR transmitter adjustments
5) Audio system adjustments

Adjusting Page	7
Adjusting Address	00 to FF
Adjusting Page	E
Adjusting Address	00 to FF
Adjusting Page	F
Adjusting Address	10 to FF

Initializing Method:

1) Select page: 0, address: 01, and set data: 80.
2) Select page: 6, address: 00, and set data: 55 (NTSC) or data: 51 (PAL).
3) Select page: 6, address: 01, set data: 55 (NTSC) or data: 51 (PAL), and press the PAUSE button of the adjustment remote commander.
4) Select page: 6, address: 02, and check that the data is "01".
5) Select page: 0, address: 01, and set data: 00.
6) Perform "Modification of 7, E, F Page Data".

2. Modification of 7, E, F Page Data

If the 7, E, F page data has been initialized, change the data of the "Fixed data-2" address shown in the following tables by manual input.

Modifying Method:

1) Before changing the data, select page: 0, address: 01, and set data: 01.
2) New data for changing are not shown in the tables because they are different in destination. When changing the data, copy the data built in the same model.
   Note : If copy the data built in the different model, the camcorder may not operate.
3) When changing the data, press the PAUSE button of the adjustment remote commander each time when setting new data to write the data in the non-volatile memory.
4) Check that the data of adjustment addresses is the initial value. If not, change the data to the initial value.

Processing after Completing Modification of 7, E, F Page data

1) Select page: 2, address: 00, and set data: 29.
2) Select page: 2, address: 01, and set data: 29, and press the PAUSE button of the adjustment remote commander.
3) Select page: 0, address: 01, and set data: 00.

3. 7 Page Table

Note1: Fixed data-1: Initialized data. (Refer to "1. Initializing the 7, E, F Page Data")

Note2: Fixed data-2: Modified data. (Refer to "2. Modified of 7, E, F Page Data")

Address	Initial value		Remark
	NTSC	PAL	
00 to 05	Fixed data-1 (Initialized data)		
06	Fixed data-2		
07			
08 to FF	Fixed data-1 (Initialized data)		

4. E Page Table

Note1: Fixed data-1: Initialized data. (Refer to "1. Initializing the 7, E, F Page Data")

Note2: Fixed data-2: Modified data. (Refer to "2. Modified of 7, E, F Page Data")

Address	Initial value		Remark
	NTSC	PAL	
00, 01			Fixed data-1 (Initialized data)
02			Fixed data-2
03			
04			
05			
06, 07			Fixed data-1 (Initialized data)
08			Fixed data-2
09 to 0D			Fixed data-1 (Initialized data)
0E			Fixed data-2
0F			
10			
11			
12			
13			
14			
15			
16			
17			
18			
19			
1A to 27			Fixed data-1 (Initialized data)
28			Fixed data-2
29 to 33			Fixed data-1 (Initialized data)
34			Fixed data-2
35			Fixed data-1 (Initialized data)
36			Fixed data-2
37			Fixed data-1 (Initialized data)
38			Fixed data-2
39			
3A to 3C			Fixed data-1 (Initialized data)
3D			Fixed data-2
3E to 42			Fixed data-1 (Initialized data)
43			Fixed data-2
44			Fixed data-1 (Initialized data)
45			Fixed data-2
46			
47			
48			
49 to 50			Fixed data-1 (Initialized data)
51			Fixed data-2
52 to 56			Fixed data-1 (Initialized data)
57			Fixed data-2
58 to 5B			Fixed data-1 (Initialized data)
5C			Fixed data-2
5D			
5E			
5F to 71			Fixed data-1 (Initialized data)
72			Fixed data-2
73 to 7B			Fixed data-1 (Initialized data)
7C			Fixed data-2
7D			
7E			
7F			Fixed data-1 (Initialized data)
80			Fixed data-2
81			
82 to 8B			Fixed data-1 (Initialized data)
8C			Fixed data-2
8D			
8E			
8F			Fixed data-1 (Initialized data)
90			Fixed data-2
91 to 93			Fixed data-1 (Initialized data)
94			Fixed data-2
95 to FF			Fixed data-1 (Initialized data)

5. F Page Table

Note1: Fixed data-1: Initialized data. (Refer to "1. Initializing the 7, E, F Page Data")

Note2: Fixed data-2: Modified data. (Refer to "2. Modified of 7, E, F Page Data")

Address	Initial value		Remark
	NTSC	PAL	
00 to 0F			
10	00	00	Emergency memory address
11	00	00	
12	00	00	
13	00	00	
14	00	00	
15	00	00	
16	00	00	
17	00	00	
18	00	00	
19	00	00	
1A	00	00	
1B	00	00	
1C			Fixed data-2
1D to 23			Fixed data-1 (Initialized data)
24			Fixed data-2
25			Fixed data-1 (Initialized data)
26			Fixed data-2
27 to 2B			Fixed data-1 (Initialized data)
2C			Fixed data-2
2D			Fixed data-1 (Initialized data)
2E			Fixed data-2
2F to 32			Fixed data-1 (Initialized data)
33			Fixed data-2
34 to 37			Fixed data-1 (Initialized data)
38	68	68	HALL adj.
39	80	80	
3A	8D	8D	
3B			Fixed data-2
3C	80	80	AWB & LV standard data input
3D	7A	7A	
3E	2B	2B	
3F	80	80	
40	65	65	
41	80	80	
42	8D	8D	Auto white balance adj.
43	87	87	
44 to 46			Fixed data-1 (Initialized data)
47	33	33	Color reproduction adj.
48			Fixed data-1 (Initialized data)
49	34	34	Color reproduction adj.
4A to 4C			Fixed data-1 (Initialized data)
4D	8C	8C	27 MHz/36 MHz origin oscillation adj.
4E	2E	2E	Flange back adj.
4F	12	12	
50	48	48	
51	F1	F1	
52	18	18	
53	5D	5D	
54	66	66	
55	00	00	Flange back adj.
56	19	19	
57	00	00	
58	19	19	
59	00	00	
5A	00	00	
5B	04	04	
5C	00	00	
5D	00	00	
5E	69	9C	Angular velocity sensor
5F	63	A0	sensitivity data preset
60	00	00	Optical axis adj.
61	00	00	Flange back adj.
62	0A	0A	Hi8/Standard8 switching position
63	00	00	adj.
64	83	83	CAP FG duty adj.
65	40	40	Hi8/Standard8 AFC f_0 adj.
66			Fixed data-1 (Initialized data)
67			Fixed data-2
68 to 7A			Fixed data-1 (Initialized data)
7B	A6	A6	Hi8/Standard8 AFM 1.5 MHz deviation adj.
7C	94	94	Hi8/Standard8 AFM 1.7 MHz deviation adj.
7D	80	80	Hi8/Standard8 AFM BPF f_0 adj.
7E	41	41	IR video deviation adj.
7F	33	33	IR audio deviation adj.
80	C7	C7	IR video carrier frequency adj.
81 to 8A			Fixed data-1 (Initialized data)
8B			Fixed data-2
8C to 93			Fixed data-1 (Initialized data)
94			Fixed data-2
95 to 97			Fixed data-1 (Initialized data)
98			Fixed data-2
99 to 9B			Fixed data-1 (Initialized data)
9C			Fixed data-2
9D to 9F			Fixed data-1 (Initialized data)
A0			Fixed data-2
A1 to AA			Fixed data-1 (Initialized data)
AB			Fixed data-2
AC to CA			Fixed data-1 (Initialized data)
CB			Fixed data-2
CC			
CD			
CE			Fixed data-1 (Initialized data)
CF			Fixed data-2
D0 to D2			Fixed data-1 (Initialized data)
D3			Fixed data-2
D4 to D6			Fixed data-1 (Initialized data)
D7	FD	FC	Color reproduction adj.
D8	F4	F2	
D9 to DE			Fixed data-1 (Initialized data)
DF			Fixed data-2

Address	Initial value		Remark
	NTSC	PAL	
E0			Fixed data-1 (Initialized data)
E1			Fixed data-2
E2 to F2			Fixed data-1 (Initialized data)
F3			Fixed data-2
F4, F5			Fixed data-1 (Initialized data)
F6			Fixed data-2
F7 to FF			Fixed data-1 (Initialized data)

1-3. CAMERA SYSTEM ADJUSTMENTS

Before perform the camera system adjustments, Check that the specified values of "27 MHz/36 MHz Origin Oscillation Adjustment", "S VIDEO OUT Y level Adjustment" and "S VIDEO OUT C level Adjustment" of "VIDEO SYSTEM ADJUSTMENT" are satisfied.

1. HALL Adjustment

For detecting the position of the lens iris, adjust the hall AMP gain and offset.

Subject	Not required
Measurement Point	Display data of page 1
Measuring Instrument	Adjustment remote commander
Adjustment Page	F
Adjustment Address	38, 39, 3A
Specified Value	88 to 8C during IRIS OPEN 15 to 19 during IRIS CLOSE

Note: Displayed data of page 1 of the adjustment remote commander.

1 : 00 : XX
└── Display data

Adjusting method:

1) Select page: 0, address: 01, and set data: 01.
2) Select page: 6, address: 94, and set data: 8A.
3) Select page: 6, address: 95, and set data: 17.
4) Select page: 6, address: 01, set data: 6D, and press the PAUSE button of the adjustment remote commander. (The HALL adjustment is performed and the adjustment data is stored in page: F, address: 38, 39 and 3A.)
5) Select page: 6, address: 02, and check that the data is "01".
6) Select page: 6, address: 01, set data: 00, and press the PAUSE button.

Checking method:

1) Select page: 0, address: 03, and set data: 03.
2) Select page: 6, address: 01, set data: 01, and press the PAUSE button.
3) Select page: 1, and check that the display data (Note) during IRIS OPEN satisfies the specified value.
4) Select page: 6, address: 01, set data: 03, and press the PAUSE button.
5) Select page: 1, and check that the display data during IRIS CLOSE satisfies the specified value.

Processing after Completing Adjustments

1) Select page: 6, address: 94, and set data: 00.
2) Select page: 6, address: 95, and set data: 00.
3) Select page: 0, address: 03, and set data: 00.
4) Select page: 0, address: 01, and set data: 00.
5) Select page: 6, address: 01, set data: 00, and press the PAUSE button.

2. Flange Back Adjustment (Using the minipattern box)

The inner focus lens flange back adjustment is carried out automatically. In whichever case, the focus will be deviated during auto focusing/manual focusing.

Subject	Siemens star chart with ND filter for the minipattern box (Note 1)
Measurement Point	Check operation on TV monitor
Measuring Instrument	
Adjustment Page	F
Adjustment Address	4E to 5D, 61

Note 1: Dark Siemens star chart.
Note 2: Perform this adjustment after performing "HALL adjustment".

Switch setting:

1) NIGHT SHOT ..... OFF
2) DIGITAL ZOOM (Menu display) ..... OFF
3) STEADY SHOT (Menu display) ..... OFF

Preparation for adjustment

The minipattern box is installed as shown in the following figure.
Note: The attachment lenses are not used.

Specified voltage: The specified voltage varies according to the minipattern box, so adjust the power supply output voltage to the specified voltage written on the sheet which is supplied with the minipattern box.

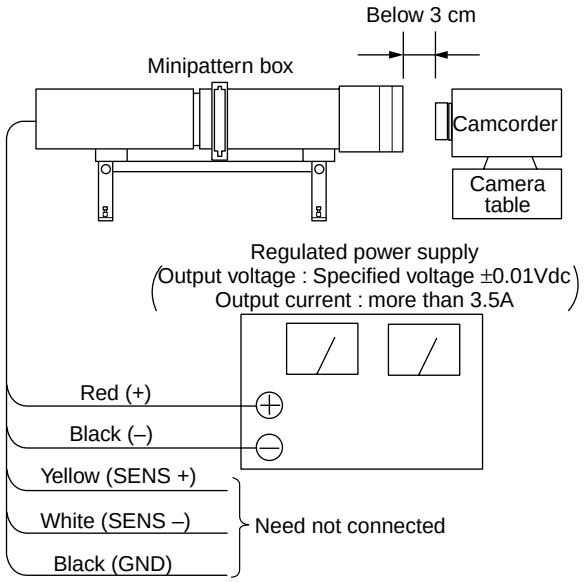

Fig. 5-1-7

Adjusting method:

1) Install the minipattern box so that the distance between it and the front of the lens of the camcorder is less than 3 cm.
2) Make the height of the minipattern box and the camcorder equal.
3) Check that the output voltage of the regulated power supply is the specified voltage ± 0.01 Vdc.
4) Check that at both the zoom lens TELE end and WIDE end, the center of the Siemens star chart and center of the exposure screen coincide.
5) Select page: 0, address: 01, and set data: 01.
6) Select page: 6, address: 82, and set data: 01.
7) Check that the data of page: F, address: 4E to 5D and 61 is the initial value (See table below).

Address	Data	Address	Data
4E	2E	57	00
4F	12	58	19
50	48	59	00
51	F1	5A	00
52	18	5B	04
53	5D	5C	00
54	66	5D	00
55	00	61	00
56	19		

8) Select page: 6, address: 02, and check that the data is "00".
9) Select page: 6, address: 01, set data: 13, and press the PAUSE button of the adjustment remote commander.
10) Select page: 6, address: 01, set data: 27, and press the PAUSE button.
(The adjustment data will be automatically input to page: F, addresses: 4E to 5D and 61)
11) Select page: 6, address: 02, and check that the data is "01".

Processing after Completing Adjustments

1) Turn OFF the main power supply (8.4 V).
2) Perform "Flange Back Check".

3. Flange Back Adjustment (Using Flange Back Adjustment Chart Subject More Than 500 m Away)

The inner focus lens flange back adjustment is carried out automatically. In whichever case, the focus will be deviated during auto focusing/manual focusing.

3-1. Flange Back Adjustment (1)

Subject	Flange back adjustment chart (2.0 m from the front of the lens) (Luminance: 350 ± 50 lux)
Measurement Point	Check operation on TV monitor
Measuring Instrument	
Adjustment Page	F
Adjustment Address	4E to 5D, 61

Note : Perform this adjustment after performing "HALL adjustment".

Switch setting:

1) NIGHT SHOT ..... OFF
2) DIGITAL ZOOM (Menu display) ..... OFF
3) STEADY SHOT (Menu display) ..... OFF

Adjusting method:

1) Check that at both the zoom lens TELE end and WIDE end, the center of the chart for the flange back adjustment and center of the exposure screen coincide.
2) Select page: 0, address: 01, and set data: 01.
3) Select page: 6, address: 82, and set data: 01.
4) Check that the data of page: F, address: 4E to 5D, 61 is the initial value (See table below).

Address	Data	Address	Data
4E	2E	57	00
4F	12	58	19
50	48	59	00
51	F1	5A	00
52	18	5B	04
53	5D	5C	00
54	66	5D	00
55	00	61	00
56	19		

5) Select page: 6, address: 02, and check that the data is "00".
6) Select page: 6, address: 01, set data: 13, and press the PAUSE button of the adjustment remote commander.
7) Select page: 6, address: 01, set data: 15, and press the PAUSE button.
   (The adjustment data will be automatically input to page: F, addresses:4E to 5D, 61)
8) Select page: 6, address: 02, and check that the data is "01".

Processing after Completing Adjustments

1) Turn OFF the main power supply (8.4 V).
2) Perform "Flange Back Adjustment (2)".

3-2. Flange Back Adjustment (2)

Perform this adjustment after performing "Flange Back Adjustment (1)".

Subject	Subject more than 500m away (Subjects with clear contrast such as buildings, etc.)
Measurement Point	Check operation on TV monitor
Measuring Instrument	
Adjustment Page	F
Adjustment Address	4E to 5D, 61

Switch setting:

1) NIGHT SHOT ..... OFF
2) DIGITAL ZOOM (Menu display) ..... OFF
3) STEADY SHOT (Menu display) ..... OFF

Adjusting method:

1) Set the zoom lens to the TELE end and expose a subject that is more than 500 m away (subject with clear contrast such as building, etc.). (Nearby subjects less than 500 m away should not be in the screen.)
2) Select page: 0, address: 01, and set data: 01.
3) Select page: 6, address: 82, and set data: 01.
4) Select page: 6, address: 02, and check that the data is "00".
5) Select page: 6, address: 01, set data: 13, and press the PAUSE button of the adjustment remote commander.
6) Place a ND filter on the lens so that the optimum image is obtain.
7) Select page: 6, address: 01, set data: 29, and press the PAUSE button.
   (The adjustment data will be automatically input to page: F, addresses: 4E to 5D, 61)
8) Select page: 6, address: 02, and check that the data is "01".

Processing after Completing Adjustments

1) Select page: 0, address: 01, and set data: 00.
2) Turn OFF the main power supply (8.4 V).
3) Perform "Flange Back Check".

4. Flange Back Check

Subject	Siemens star (PTB-450) (2.0 m from the front of the lens) (Luminance : approx. 200 lux)
Measurement Point	Check operation on TV monitor
Measuring Instrument	
Specified Value	Focused at the TELE end and WIDE end.

Switch setting:

1) NIGHT SHOT ..... OFF
2) DIGITAL ZOOM (Menu display) ..... OFF
3) STEADY SHOT (Menu display) ..... OFF

Note: When the auto focus is ON, the lens can be checked if it is focused or not by observing the data on the page 1 of the adjustment remote commander.

1) Select page: 0, address: 03, and set data: 0F.
2) Page 1 shows the state of the focus.

1 : 00 : XX
- Odd: Focused
- Even: Unfocused

Checking method:

1) Place the Siemens star 2.0 m from the front of the lens.
2) To open the IRIS, decrease the luminous intensity to the Siemens star up to a point before noise appear on the image.
3) Select page: 6, address: 40, and set data: 02.
4) Select page: 6, address: 41, and set data: 01.
5) Shoot the Siemens star with the zoom TELE end.
6) Turn on the auto focus.
7) Check that the lens is focused (Note).
8) Select page: 6, address: 21, and set data: 10.
9) Shoot the Siemens star with the zoom WIDE end.
10) Observe the TV monitor and check that the lens is focused.

Processing after Completing Adjustments

1) Select page: 6, address: 21, and set data: 00.
2) Select page: 6, address: 40, and set data: 00.
3) Select page: 6, address: 41, and set data: 00.
4) Select page: 0, address: 03, and set data: 00.

5. Optical Axis Adjustment

Correct a deviation of optical axis between the lens and the CCD imager.
If deviated, the screen center will be shifted when the lens is zoomed from TELE end to WIDE end.

Subject	Siemens Star (PTB-450)
Measurement Point	Check operation on monitor TV
Measuring Instrument	
Adjustment Page	F
Adjustment Address	60

Note: "Flange Back Adjustment" must be already finished.

Switch setting:

1) NIGHT SHOT ..... OFF
2) DIGITAL ZOOM (Menu display) ..... OFF
3) STEADY SHOT (Menu display) ..... OFF

Preparation for adjustment:

1) Play a monoscope portion of the System Check tape (WR5-5ND(NTSC) or WR5-5CD(PAL)).
2) Stick the optical axis deviation specification frame to the monitor screen so that the center of monoscope coincides with the center of specification frame.
3) Select the CAMERA mode.

Adjustment method:

1) Select page:0, address:01, and set data:01.
2) Select page:F, address:60, and set data:00, then press the PAUSE button on the adjusting remote commander.
3) Place the Siemens Star at 2m position away from the lens.
4) Shoot the Siemens Star with the zoom at TELE end.
5) Change the lens direction so that the center of Siemens Star coincides with the center of optical axis deviation specification frame.
6) Shoot the Siemens Star with the zoom at WIDE end.
7) Check on the monitor TV which area the center of Siemens Star exists of the optical axis deviation specification frame.
   At this time, measure the amount of deviation "L1" (distance from the center of Siemens Star to the center of optical axis deviation specification frame).
8) From the following table, read correction data according to the area.

Area	Deviation Phase	Correction Data
1	22.6° to 67.5°	01
2	67.6° to 112.5°	02
3	112.6° to 157.5°	03
4	157.6° to 202.5°	04
5	202.6° to 247.5°	05
6	247.6° to 292.5°	06
7	292.6° to 337.5°	07
8	337.6° to 22.5°	08

9) Select page:F, address:60, and set correction data, then press the PAUSE button on the adjusting remote commander.
10) Shoot the Siemens Star with the zoom at TELE end.
11) Change the lens direction so that the center of Siemens Star coincides with the center of optical axis deviation specification frame.
12) Shoot the Siemens Star with the zoom at WIDE end.
13) Measure the amount of deviation "L2" (distance from the center of Siemens Star to the center of optical axis deviation specification frame).
14) Compare L1 and L2, and make sure that the L2 is smaller than L1.
    If large, select page:F, address:60, and set data:00, then press the PAUSE button on the adjusting remote commander.

Processing after completion of adjustment:

1) Select page:0, address:01, and set data:00.

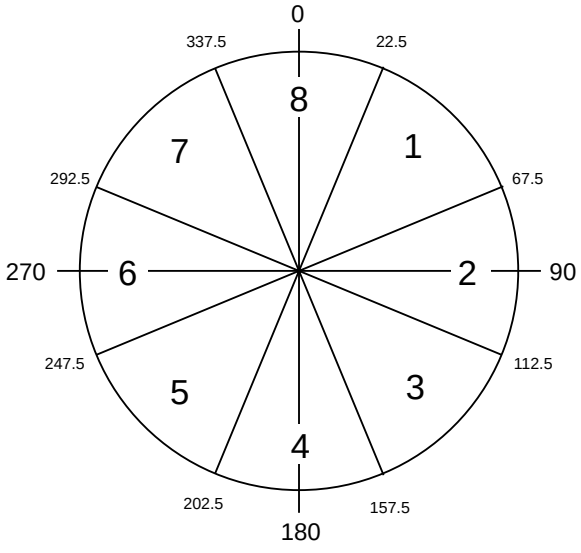

Fig. 5-1-8

6. Picture Frame Setting

Subject	Color bar chart (PTB-450) (Color reproduction adjustment frame) (1.5 m from the front of the lens)
Measurement Point	Video output terminal of A/V jack
Measuring Instrument	Oscilloscope and TV monitor
Specified Value	A=B, C=D, E=F

Note: "Flange Back Adjustment" must be already finished.

Switch setting:

1) NIGHT SHOT ..... OFF
2) DIGITAL ZOOM (Menu display) ..... OFF
3) STEADY SHOT (Menu display) ..... OFF

Setting method:

1) Select page: 6, address: 82, and set data: 01.
2) Adjust the zoom and the camera direction, and set to the specified position.
3) Select page: 6, address: 82, and set data: 00.
4) Mark the position of the picture frame on the monitor display, and adjust the picture frame to this position in following adjustments using "Color reproduction adjustment frame".

Check on the oscilloscope

1. Horizontal period

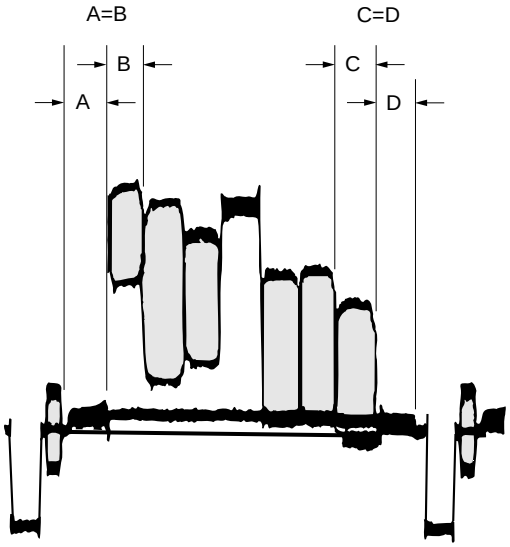

Fig. 5-1-9

2. Vertical period

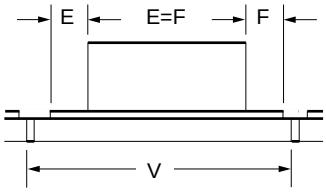

Fig. 5-1-10

Check on the monitor TV (Underscanned mode)

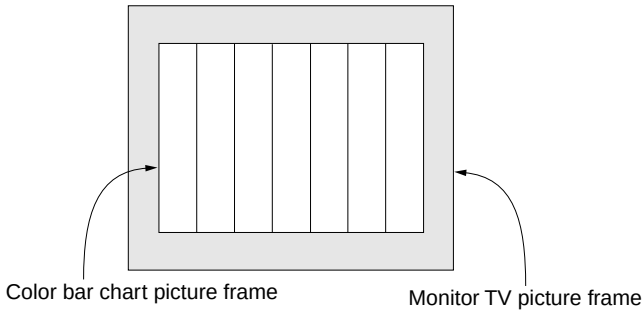

Fig. 5-1-11

7. Color Reproduction Adjustment

Adjust the color Separation matrix coefficient so that proper color reproduction is produced.

Subject	Color bar chart (PTB-450) (Color reproduction adjustment frame)
Measurement Point	Video output terminal of A/V jack
Measuring Instrument	Vectorscope
Adjustment Page	F
Adjustment Address	47, 49, D7, D8
Specified Value	All color luminance points should settle within each color reproduction frame.

Note: NTSC 720H model: DCR-TRV120/TRV120P
PAL 960H model: DCR-TRV120E/TRV125E/TR8000E/TR8100E

Switch setting:

1) NIGHT SHOT ..... OFF
2) DIGITAL ZOOM (Menu display) ..... OFF
3) STEADY SHOT (Menu display) ..... OFF

Adjusting method:

1) Select page: 0, address: 01, and set data: 01.
2) Select page: 6, address: 82, and set data: 01.
3) Select page: F, address: 8B. After note down the data of this address, set data: 29 to the address, and press the PAUSE button of the adjustment remote commander.
4) Select page: 6, address: 01, set data: 3D, and press the PAUSE button.
5) Select page: F, address: 2B, set data: 17 (NTSC 720H model) or data: 97 (PAL 960H model), and press the PAUSE button.
6) Adjust the GAIN and PHASE of the vectorscope, and adjust the burst luminance point to the burst position of the color reproduction frame.
7) Change the data of page: F, address: 47, 49, D7 and D8, and settle each color luminance point in each color reproduction frame.
   Note: Be sure to press the PAUSE button of the adjustment remote commander before changing the addresses. If not, the new data will not be written to the memory.
8) Select page: F, address: 8B, and set the data that is noted down at step 3).

Processing after Completing Adjustments

1) Select page: F, address: 2B, set data: 13 (NTSC 720H model) or data: 93 (PAL 960H model), and press the PAUSE button of the adjustment remote commander.
2) Select page: 6, address: 01, set data: 00, and press the PAUSE button.
3) Select page: 6, address: 82, and set data: 00.
4) Select page: 0, address: 01, and set data: 00.

NTSC 720H model

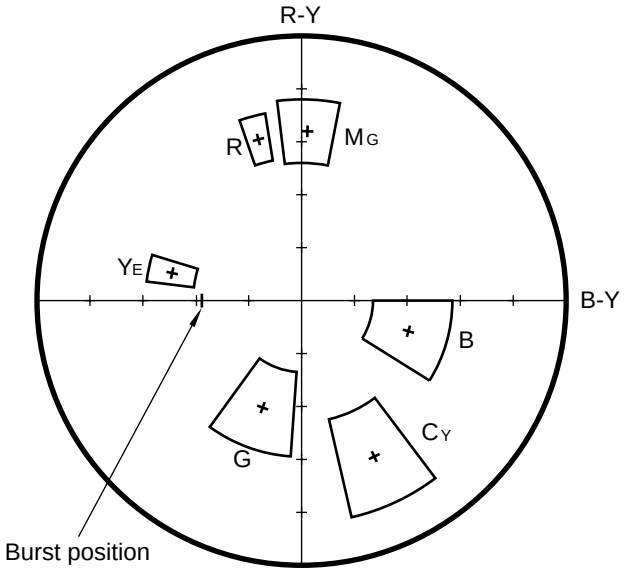

PAL 960H model

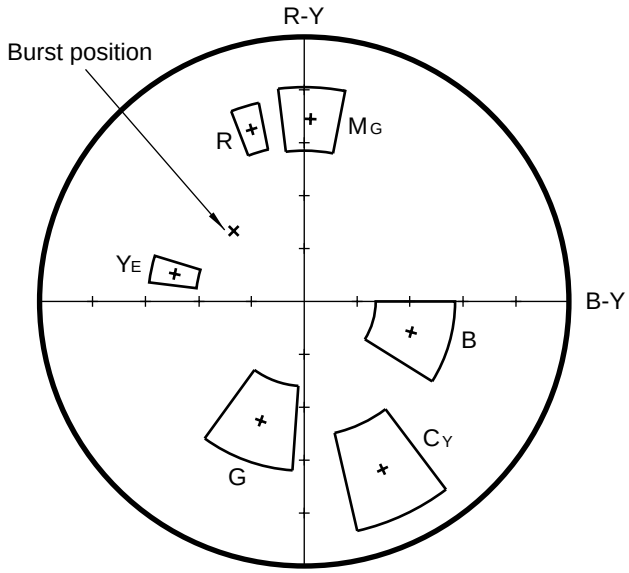

Fig. 5-1-12

8. AWB & LV Standard Data Input

Subject	Clear chart (PTB-450) (Color reproduction adjustment frame)
Adjustment Page	F
Adjustment Address	3C to 41

Note 1: This adjustment should be carried out upon completion of "Color Reproduction Adjustment".

Note 2: Check that the data of page: 6, address: 02 is "00". If not, turn the power of the unit OFF/ON.

Switch setting:

1) NIGHT SHOT ..... OFF
2) DIGITAL ZOOM (Menu display) ..... OFF
3) STEADY SHOT (Menu display) ..... OFF

Adjusting method:

1) Select page: 0, address: 01, and set data: 01.
2) Select page: 6, address: 82, and set data: 01.
3) Wait for 2 seconds.
4) Select page: 6, address: 01, set data: 11, and press the PAUSE button of the adjustment remote commander.
5) Select page: 6, address: 01, set data: 0D, and press the PAUSE button.
   (When the standard data is take in, the data will be automatically input to page: F, address: 3C to 41)
6) Select page: 6, address: 02, and check that the data is "01".

Processing after Completing Adjustments

1) Select page: 6, address: 01, set data: 00, and press the PAUSE button of the adjustment remote commander.
2) Select page: 6, address: 82, and set data: 00.
3) Select page: 0, address: 01, and set data: 00.
4) Perform "Auto White Balance Adjustment".

9. Auto White Balance Adjustment

Adjust to the proper auto white balance output data.
If it is not correct, auto white balance and color reproducibility will be poor.

Subject	Clear chart (PTB-450) (Color reproduction adjustment frame)
Filter	Filter C14 for color temperature correction
Measurement Point	Display data of page 1 (Note2)
Measuring Instrument	Adjustment remote commander
Adjustment Page	F
Adjustment Address	42, 43
Specified Value	NTSC 720H model R ratio: 2A40 to 2AC0 B ratio: 60A0 to 6160 PAL 960H model R ratio: 2C40 to 2CC0 B ratio: 5FA0 to 6060

Note 1: Perform "Auto White Balance Standard Data Input" before this adjustment.

Note 2: Displayed data of page 1 of the adjustment remote commander.

1 : XX : XX
└──── Display data

Note 3: NTSC 720H model: DCR-TRV120/TRV120P
PAL 960H model: DCR-TRV120E/TRV125E/TR8000E/TR8100E

Switch setting:

1) NIGHT SHOT ..... OFF
2) DIGITAL ZOOM (Menu display) ..... OFF
3) STEADY SHOT (Menu display) ..... OFF

Adjusting method:

1) Place the C14 filter for color temperature correction on the lens.
2) Select page: 0, address: 01, and set data: 01.
3) Select page: 6, address: 82, and set data: 01.
4) Select page: F, addresses: B8 to BB, and note down the data of each address.
5) Input the following data to page: F, addresses: B8 to BB.

Address		B8	B9	BA	BB
Data	NTSC 720H model	2A	80	61	00
	PAL 960H model	2C	80	60	00

Note: Press the PAUSE button of the adjustment remote commander each time to set the data.

6) Select page: 6, address: 01, set data: A7, and press the PAUSE button.
7) Wait for 2 seconds.
8) Select page: 6, address: 01, set data: A5, and press the PAUSE button.
   (The auto white balance adjustment is performed and the adjustment data is stored in page: F, address: 42 and 43.)
9) Select page: 6, address: 02, and check that the data is "01".
10) Select page: 6, address: 01, set data: 3F, and press the PAUSE button.
11) Select page: 0, address: 03, and set data: 04.
12) Select page: 1, and check that the display data (Note2) satisfies the R ratio specified value.
13) Select page: 0, address: 03, and set data: 05.
14) Select page: 1, and check that the display data (Note2) satisfies the B ratio specified value.
15) Select page: F, addresses: B8 to BB, and input the data noted down at step 3).

Note: After setting each data, be sure to press the PAUSE button of the adjustment remote commander.

Processing after Completing Adjustments

1) Select page: 6, address: 01, set data: 00, and press the PAUSE button.
2) Select page: 6, address: 82, and set data: 00.
3) Select page: 0, address: 03, and set data: 00.
4) Select page: 0, address: 01, and set data: 00.

10. White Balance Check

Subject	Clear chart (PTB-450) (Color reproduction adjustment frame)
Filter	Filter C14 for color temperature correction ND filter 1.0, 0.4 and 0.1
Measurement Point	Video output terminal of A/V jack
Measuring Instrument	Vectorscope
Specified Value	Fig. 5-1-13 A to C

Switch setting:

1) NIGHT SHOT ..... OFF
2) DIGITAL ZOOM (Menu display) ..... OFF
3) STEADY SHOT (Menu display) ..... OFF

Checking method:

1) Check that the lens is not covered with either filter.
2) Select page: 6, address: 82, and set data: 01.
3) Select page: 6, address: 01, set data: 0F, and press the PAUSE button of the adjustment remote commander.
4) Check that the center of the white luminance point is within the circle shown Fig. 5-1-13 (A).
5) Select page: 6, address: 01, set data: 00, and press the PAUSE button.
6) Select page: 6, address: 01, set data: 23, and press the PAUSE button.
7) Place the C14 filter on the lens.
8) Check that the center of the white luminance point settles in the circle shown Fig. 5-1-13 (B).
9) Remove the C14 filter, and place the ND filter 1.5 (1.0 + 0.4 + 0.1) on the lens.
10) Check that the white luminance point stopped moving, and then remove the ND filter 1.5.
11) Check that the center of the white luminance point settles within the circle shown Fig. 5-1-13 (C).

Processing after Completing Adjustments

1) Select page: 6, address: 01, set data: 00, and press the PAUSE button of the adjustment remote commander.
2) Select page: 6, address: 82, and set data: 00.

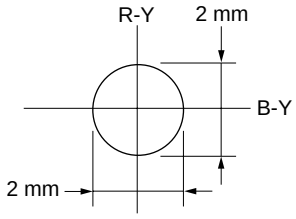

Fig. 5-1-13 (A)

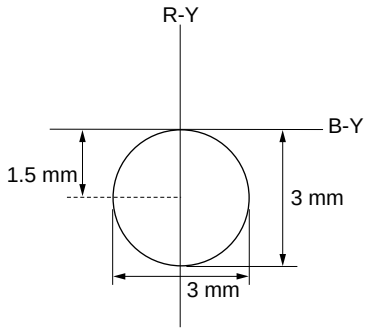

Fig. 5-1-13 (B)

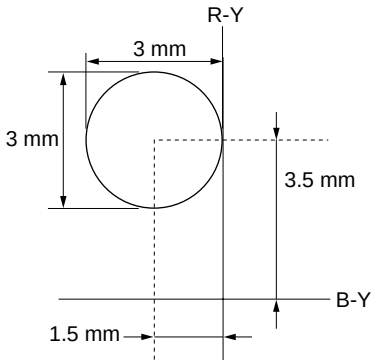

Fig. 5-1-13 (C)

11. Angular Velocity Sensor Sensitivity Data Preset and Steady Shot Check

Check the angular velocity sensor output.

Precautions on the Parts Replacement

There are two types of repair parts.

Type A ENC03JA
Type B ENC03JB

Replace the broken sensor with a same type sensor. If replace with other type parts, the image will vibrate up and down or left and right during hand-shake correction operations.

Precautions on Angular Velocity Sensor

The sensor incorporates a precision oscillator. Handle it with care as if it dropped, the balance of the oscillator will be disrupted and operations will not be performed properly.

Subject	Not required
Measurement Point	Display data of page 1 (Note 1)
Measuring Instrument	Adjustment remote commander
Adjustment Page	F
Adjustment Address	5E, 5F
Specified Value	PITCH data: 2900 to 4D00 YAW data: 2900 to 4D00

Note 1: Displayed data of page 1 of the adjustment remote commander.

1 : XX : XX
└──── Display data

Note 2: NTSC model: DCR-TRV120/TRV120P
PAL model: DCR-TRV120E/TRV125E/
TR8000E/TR8100E

Adjusting method:

1) Select page: 0, address: 01, and set data: 01.
2) Select page: F, address: 5E, set data: 69 (NTSC model) or 9C (PAL model), and press the PAUSE button.
3) Select page: F, address: 5F, set data: 63 (NTSC model) or A0 (PAL model), and press the PAUSE button.
4) Select page: 0, address: 03, and set data: 11.
5) Select page: 1, and check that the display data (Note 1) during PITCH data satisfies the specified value.
6) Select page: 0, address: 03, and set data: 12.
7) Select page: 1, and check that the display data during YAW data satisfies the specified value.

Processing after Completing Adjustments

1) Select page: 0, address: 03, and set data: 00.
2) Select page: 0, address: 01, and set data: 00.
3) Check that the steady shot operations have been performed normally.

1-4. MONOCHROME ELECTRONIC VIEWFINEDER SYSTEM ADJUSTMENTS

Note: NTSC model: DCR-TRV120/TRV120P
PAL model: DCR-TRV120E/TRV125E/TR8000E/TR8100E

1-4-1. Horizontal Slant Check

Mode	Playback
Signal	Hi8/standard 8 mm alignment tape : For checking operation (WR5-8NSE(NTSC)) (WR5-8CSE(PAL)) Monoscope section
Specified Value	± 1.5°

Adjustment method:

1) Adjust RV904 (BRIGHT) (VF-129 board) so that the CRT can be seen easily and clearly.
2) Check that the difference between the horizontal line and the tilt of black mask satisfies the specified value.

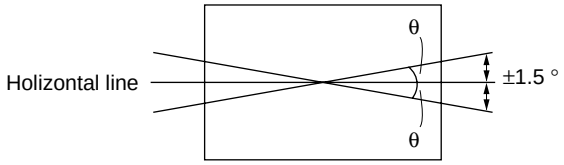

Specified value : The image should be within ± 1.5 ° of the holizontal line.

Fig. 5-1-14

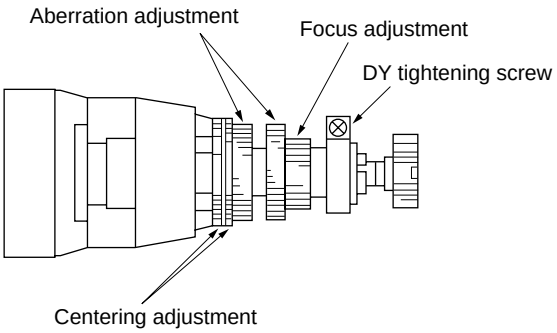

Fig. 5-1-15

1-4-2. Centering Adjustment

Mode	Playback
Signal	Hi8/standard 8 mm alignment tape : For checking operation (WR5-8NSE(NTSC)) (WR5-8CSE(PAL)) Monoscope section
Specified Value	± 4%

Adjustment method:

1) Use the centering adjustment ring and adjust so that the left, light, top, and bottom sides of the display are uniform. (Refer to Fig. 5-1-14)
   Note: As the centering position changes due to earth magnetism, rotate it 360° in the horizontal direction, and adjust with the center section of the modifying position.

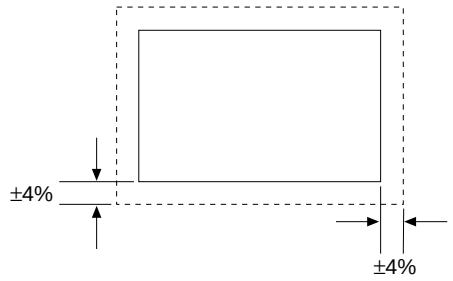

Adjustment value : ±4%

Fig. 5-1-16

1-4-3. Focus Adjustment

Mode	Playback
Signal	Hi8/standard 8 mm alignment tape : For checking operation (WR5-8NSE(NTSC)) (WR5-8CSE(PAL)) Monoscope section

Adjustment method:

1) Adjust the focus ring to obtain the optimum focus. (Refer to Fig. 5-1-14)

VF-129 BOARD

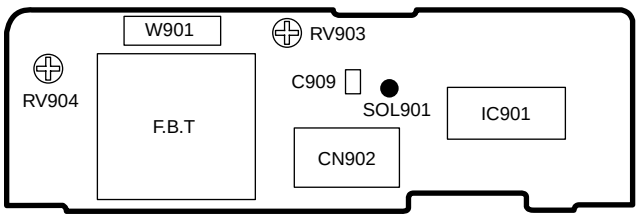

1-4-4. Aberration Adjustment

Mode	VTR stop
Signal	Dot pattern
Specified Value	b1 ≦ 2 × a1 b2 ≦ 0.8 × a2

Adjustment method:

1) Adjust the aberration adjustment ring so that the tracing of the dot satisfies the specified value.
2) If the centering becomes displaced here, perform the centering adjustment from the beginning again.

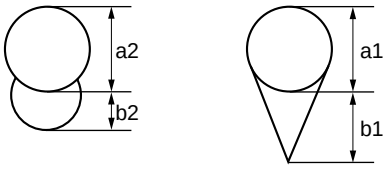

Fig. 5-1-17

1-4-5. Horizontal Amplitude Adjustment (VF-129 board)

Mode	Playback
Signal	Hi8/standard 8 mm alignment tape : For checking operation (WR5-8NSE(NTSC)) (WR5-8CSE(PAL)) Monoscope section
Adjusting Element	C909 (SOL901)
Specified Value	12 ± 6%

Adjustment method:

1) Rotate RV903, and adjust the top and bottom side of the monoscope image to the top and bottom edges of the display.
2) Rotate RV904 so that the brightness is the normal level.
3) Solder or unsolder SOL901 pattern of the H size adjustment capacitor (C909) to “short” or “open”, so that the horizontal direction over scan becomes 12 ± 6% (Left and right totals).

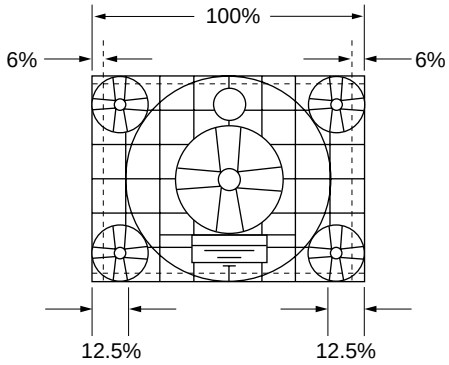

SOL901	Size H
Open	Small
Short	Big

Fig. 5-1-18

VF-129 BOARD

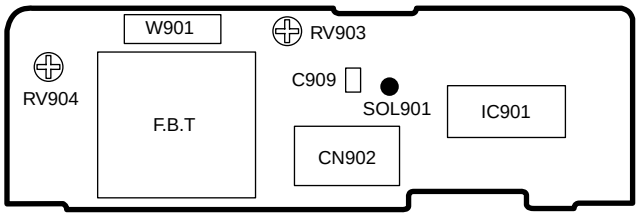

1-4-6. Vertical Amplitude Adjustment (VF-129 board)

Mode	Playback
Signal	Hi8/standard 8 mm alignment tape : For checking operation (WR5-8NSE(NTSC)) (WR5-8CSE(PAL)) Monoscope section
Adjusting Element	RV903
Specified Value	10 ± 3%

Adjustment method:

1) Adjust RV903 so that the vertical direction over scan becomes 10 ± 3% (Top and bottom totals).

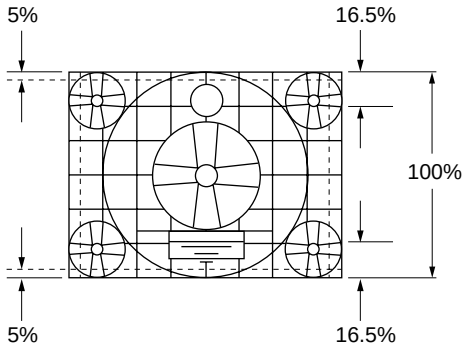

Fig. 5-1-19

VF-129 BOARD

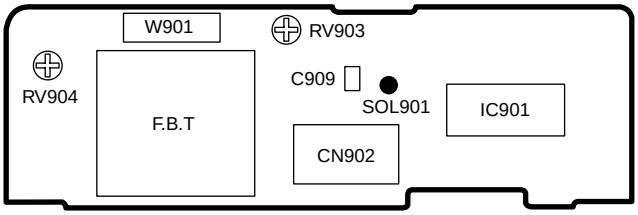

1-4-7. Brightness Adjustment (VF-129 board)

Mode	Playback
Signal	Hi8/standard 8 mm alignment tape : For checking operation (WR5-8NSE(NTSC)) (WR5-8CSE(PAL)) Monoscope section
Adjusting Element	RV904

Adjustment method:

1) Rotate RV904, and adjust so that the bright/dark sections of gray scale are displayed correctly. (The bright section should be unsatisfactory till the cross hatch appears vague in the monoscope circle. The dark section should be unsatisfactory till the darkest section of the gray scale cannot be differentiate.)

1-4-8. Horizontal Amplitude, Vertical Amplitude, Focus Check

"1-4-5. Horizontal Amplitude Adjustment" and "1-4-6. Vertical Amplitude Adjustment" should be both satisfy the specified values. If not, perform the adjustments from the beginning again. In this case, perform "1-4-7. Brightness Adjustment" again.

Moreover, check the focus, and if it found to be vague, perform "1-4-3. Focus Adjustment" and "1-4-4. Aberration Adjustment".

1-5. LCD SYSTEM ADJUSTMENTS (DCR-TRV120/TRV120E/TRV120P/TRV125E)

Note 1: The back light (fluorescent tube) is driven by a high voltage AC power supply. Therefore, do not touch the back light holder to avoid electrical shock.

Note 2: When replacing the LCD unit, be careful to prevent damages caused by static electricity.

Note 3: Set the LCD BRIGHT to the center.
Set the LCD COLOR (Menu display) to the center.

Note 4: TYPE S 61 k model: DCR-TRV120/TRV120P
TYPE S 123 k model: DCR-TRV120E: AEP, UK, EE, NE, RU/TRV125E
TYPE C model: DCR-TRV120E: E, HK, AUS, CN, JE

[Adjusting connector]

Most of the measuring points for adjusting the LCD display are concentrated in the following connector.
CN5502 of the PD-117 board
Connect the Measuring Instruments via the multi CPC jig (J-6082-311-A).
The following table shows the Pin No. and signal name of the connector.

Pin No.	Signal Name	Pin No.	Signal Name
1	VB	2	XVD OUT
3	VG	4	PANEL COM
5	VR	6	N.C.
7	C-SYNC/XHD	8	XHD OUT
9	GND	10	GND

[LCD type check]

By measuring the resistor value between Pin ⑥ of CN5502 and Pin ⑩ of CN5502, the type of LCD can be discriminated.

PD-117 board CN5502

Resistor value	LCD type	Model
1 kΩ	TYPE S 61 k	DCR-TRV120/TRV120P
1.5 kΩ	TYPE C	DCR-TRV120E: E, HK, AUS, CN, JE
2.2 kΩ	TYPE S 123 k	DCR-TRV120E: AEP, UK, EE, NE, RU/TRV125E

Abbreviation
EE : East European model
NE : North European model
RU : Russian model
HK : Hong Kong model
AUS : Australian model
CN : Chinese model
JE : Tourist model

1. LCD Initial Data Input (1)

Mode	VTR stop
Signal	Arbitrary
Adjustment Page	C
Adjustment Address	AB to BA

Adjusting method:

1) Select page: 0, address:01, and set data: 01.
2) Select page: C, and input the data in the following table.
   Note: To write in the non-volatile memory (EEPROM), press the PAUSE button of the adjustment remote commander each time to set the data.
3) Select page: 0, address:01, and set data: 00.

Address	Data	Remark
AB	53	Fixed data
AC	00	
AD	90	
AE	CB	
AF	66	
B0	26	
B1	00	
B2	00	
B3	20	
B4	0A	
B5	24	
B6	1A	
B7	08	
B8	17	
B9	21	
BA	23	

2. LCD Initial Data Input (2)

Mode	VTR stop
Signal	Arbitrary
Adjustment Page	D
Adjustment Address	A0 to AA, AC to B1

Note: TYPE S 61 k model: DCR-TRV120/TRV120P
TYPE S 123 k model: DCR-TRV120E: AEP, UK, EE, NE, RU/TRV125E
TYPE C model: DCR-TRV120E: E, HK, AUS, CN, JE

Adjusting method:

1) Select page: 0, address:01, and set data: 01.
2) Select page: D, and input the data in the following table.
   Note: To write in the non-volatile memory (EEPROM), press the PAUSE button of the adjustment remote commander each time to set the data.
3) Select page: 0, address:01, and set data: 00.

Address	Data			Remark
	TYPE S		TYPE C	
	61 k	123 k		
A0	78	78	78	Fixed data
A1	95	95	95	
A2	80	80	80	VCO adj.
A3	70	70	70	VCO adj. (PAL model) Fixed data (NTSC model)
A4	80	80	80	V-COM adj.
A5	30	30	20	RGB AMP adj.
A6	00	00	00	Fixed data
A7	C0	C0	80	COM AMP adj.
A8	80	80	80	White balance adj.
A9	80	80	80	
AA	50	50	30	Contrast adj.
AC	14	33	0A	Fixed data
AD	14	14	0E	
AE	9F	9F	9F	
AF	1F	1F	1F	
B0	FC	FC	FC	
B1	FF	FF	FF	

3. VCO Adjustment (PD-117 board)

Set the VCO free-run frequency. If deviated, the LCD screen will be blurred.

Mode	Camera
Subject	Arbitrary
Measurement Point	Pin ⑧ of CN5502 (XHD OUT)
Measuring Instrument	Frequency counter
Adjustment Page	D
Adjustment Address	A2 (NTSC model) A2, A3 (PAL model)
Specified Value	f=15734 ± 30 Hz (NTSC model) f=15625 ± 30 Hz (PAL model)

Note 1: NTSC model: DCR-TRV120/TRV120P
PAL model: DCR-TRV120E/TRV125E

Adjusting method (NTSC model):

1) Select page: 0, address: 01, and set data: 01.
2) Select page: D, address: A2, change the data and set the VCO frequency (f) to the specified value.
3) Press the PAUSE button of the adjustment remote commander.
4) Select page: 0, address: 01, and set data: 00.

Adjusting method (PAL model):

1) Select page: 0, address: 01, and set data: 01.
2) Select page: D, address: A2, change the data, and set the VCO frequency (f) to the specified value.
3) Press the PAUSE button of adjustment remote commander.
4) Read the adjustment data of step 2), and this data is named D_{A2}.
5) Convert D_{A2} to decimal notation, and obtain D_{A2}'.
   (Refer to Table 5-4-1 "Hexdecimal-decimal conversion table" of "5-4. Service Mode")
6) Calculate D_{A3}' using following equations (decimal calculation), convert it to a hexdecimal number, and obtain D_{A3}.
   TYPE C model: $D_{A3}' = D_{A2}' - 16$
   TYPE S 123 k model: $D_{A3}' = D_{A2}' - 23$
   Note2: If $D_{A3}' < 0$, then D_{A2} = "00"
7) Select page: D, address: A3, set data D_{A3}, and then press the PAUSE button of adjustment remote commander.
8) Select page: 0, address: 01, and set data: 00.

4. RGB AMP Adjustment (PD-117 board)

Set the D range of the RGB driver used to drive the LCD to the specified value. If deviated, the LCD screen will become blackish or saturated (whitish).

Mode	Camera
Subject	Arbitrary
Measurement Point	Pin ③ of CN5502 (VG) External trigger : Pin ④ of CN5502 (PANEL COM)
Measuring Instrument	Oscilloscope
Adjustment Page	D
Adjustment Address	A5
Specified Value	A=3.59 ± 0.05 Vp-p (TYPE S model) A=2.81 ± 0.05 Vp-p (TYPE C model)

Note: TYPE S model: DCR-TRV120/TRV120E: AEP, UK, EE, NE, RU/TRV120P/TRV125E
TYPE C model: DCR-TRV120E: E, HK, AUS, CN, JE

Adjusting method:

1) Select page: 0, address: 01, and set data: 01.
2) Select page: D, address: A5, change the data and set the voltage (A) between the reversed waveform pedestal and non-reversed waveform pedestal to the specified value.
   (The data of address: A5, should be “00” to “3F”)
3) Press the PAUSE button.
4) Select page: 0, address: 01, and set data: 00.

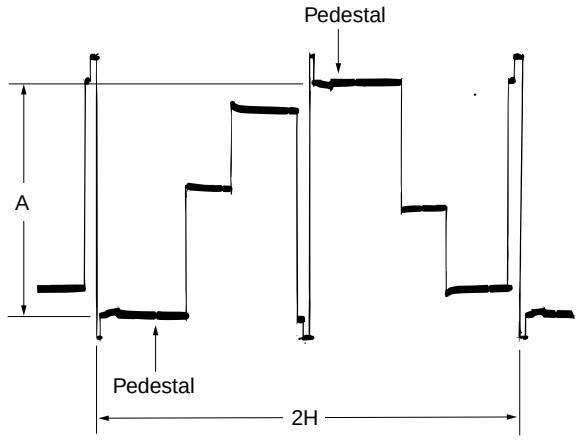

Fig. 5-1-20

5. Contrast Adjustment (PD-117 board)

Set the level of the VIDEO signal for driving the LCD to the specified value. If deviated, the screen image will be blackish or saturated (whitish).

Mode	Camera
Subject	Arbitrary
Measurement Point	Pin ③ of CN5502 (VG) External trigger : Pin ④ of CN5502 (PANEL COM)
Measuring Instrument	Oscilloscope
Adjustment Page	D
Adjustment Address	AA
Specified Value	A=3.47 ± 0.07 Vp-p (TYPE S 61 k model) A=3.34 ± 0.07 Vp-p (TYPE S 123 k model) A=2.80 ± 0.07 Vp-p (TYPE C model)

Note: TYPE S 61 k model: DCR-TRV120/TRV120P
TYPE S 123 k model: DCR-TRV120E: AEP, UK, EE, NE, RU/TRV125E
TYPE C model: DCR-TRV120E: E, HK, AUS, CN, JE

Adjusting method:

1) Select page: 0, address: 01, and set data: 01.
2) Select page: D, address: AA, change the data and set the voltage (A) between the pedestal (0 IRE) and 100 IRE to the specified value.
   (The data of address: AA, should be “00” to “07”)
3) Press the PAUSE button.
4) Select page: 0, address: 01, and set data: 00.

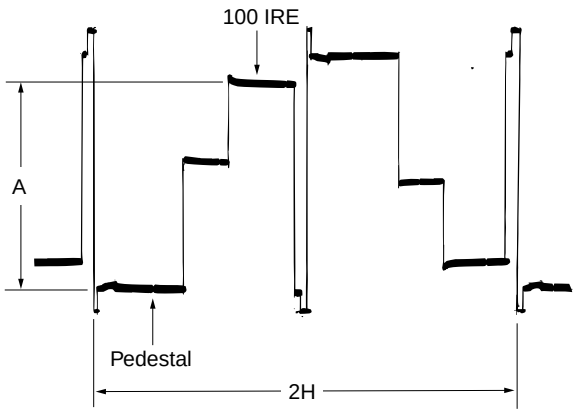

Fig. 5-1-21

6. COM AMP Adjustment (PD-117 board)

Set the common electrode drive signal level of LCD to the specified value.

Mode	Camera
Subject	Arbitrary
Measurement Point	Pin ④ of CN5502 (PANEL COM)
Measuring Instrument	Oscilloscope
Adjustment Page	D
Adjustment Address	A7
Specified Value	A=6.33 ± 0.05 Vp-p (TYPE S model) A=5.05 ± 0.05 Vp-p (TYPE C model)

Note: TYPE S model: DCR-TRV120/
TRV120E: AEP, UK, EE, NE, RU/
TRV120P/TRV125E
TYPE C model: DCR-TRV120E: E, HK, AUS, CN, JE

Adjusting method:

1) Select page: 0, address: 01, and set data: 01.
2) Select page: D, address: A7, change the data and set the PANEL COM signal level (A) to the specified value.
3) Press the PAUSE button.
4) Select page: 0, address: 01, and set data: 00.

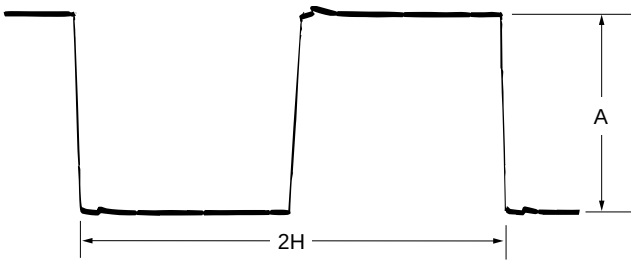

Fig. 5-1-22

7. V-COM Adjustment (PD-117 board)

Set the DC bias of the common electrode drive signal of LCD to the specified value.
If deviated, the LCD display will move, producing flicker and conspicuous vertical lines.

Mode	Camera
Subject	Arbitrary
Measurement Point	Check on LCD display
Measuring Instrument	
Adjustment Page	D
Adjustment Address	A4

Note: Perform "Bright Adjustment" and "Contrast Adjustment" before this adjustment.

Adjusting method:

1) Select page: 0, address: 01, and set data: 01.
2) Select page: D, address: A4, change the data so that the brightness of the section A and that of the section B is equal.
3) Read the adjustment data of step 2), and this data is named Dref.
4) Convert Dref to decimal notation, and obtain Dref'.
(Refer to Table 5-4-1 "Hexdecimal-decimal conversion table" of"5-4. Service Mode")
5) Calculate D_{A4}' using following equations (decimal calculation), convert it to a hexdecimal number, and obtain D_{A4}.
D_{A4}'=Dref'–8
6) Select page: D, address: A4, set data D_{A4}, and then press the PAUSE button of adjustment remote commander.
7) Select page: 0, address: 01, and set data: 00.

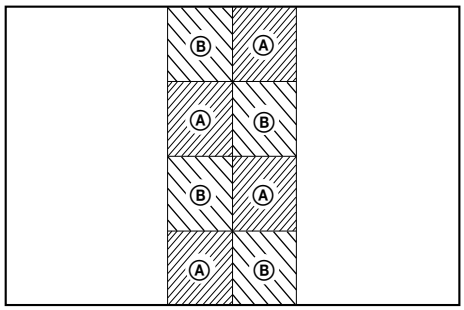

Fig. 5-1-23

8. White Balance Adjustment (PD-117 board)

Correct the white balance.
If deviated, the LCD screen color cannot be reproduced.

Mode	Camera
Subject	Arbitrary
Measurement Point	Check on LCD display
Measuring Instrument	
Adjustment Page	D
Adjustment Address	A8, A9
Specified Value	The LCD screen should not be colored.

Note 1: Check the white balance only when replacing the following parts. If necessary, adjust them.
1. LCD panel
2. Light induction plate
3. IC5501

Adjusting method:

1) Select page: 0, address: 01, and set data: 01.
2) Select page: D, address: A8 and A9, and set the data to the initial value.
   Note: To write in the non-volatile memory (EEPROM), press the PAUSE button of the adjustment remote commander each time to set the data.

Address	Data
A8	80
A9	80

3) Check that the LCD screen is not colored. If colored, change the data of page: D, address: A8 and A9 so that the LCD screen is not colored.
   Note: To write in the non-volatile memory (EEPROM), press the PAUSE button of the adjustment remote commander each time to set the data.
4) Select page: 0, address: 01, and set data: 00.

5-2. MECHANISM SECTION ADJUSTMENT

Mechanism Section adjustments, checks, and replacement of mechanism parts, refer to the separate volume "8 mm Video Mechanism Adjustment Manual VII [B Mechanism] ".

Note 1: NTSC model: DCR-TRV120/TRV120P
PAL model: DCR-TRV120E/TRV125E/TR8000E/TR8100E

2-1. Hi8/STANDARD 8 mm MODE

2-1-1. HOW TO ENTER PLAYBACK MODE WITHOUT CASSETTE

1) Refer to "Section 2. DISASSEMBLY" and supply the power with the cabinet assembly removed. (So that the mechanical deck can be operated.)
2) Connect the adjustment remote commander to the LANC jack.
3) Turn on the HOLD switch of the adjustment remote commander.
4) Close the cassette compartment without loading a cassette and complete loading.
5) Select page: 0, address: 01, and set data: 01.
6) Select page: F, address: 22, set data: 81, and press the PAUSE button of the adjustment remote commander.
7) Select page: D, address: 10, set data: 10, and press the PAUSE button of the adjustment remote commander.
8) Select page: 2, address: 2E, and set data: 02.
9) Press the PLAY button of the unit.

Note2: Be sure to carry out "Processing after checking Operations" after checking the operations.
Set the data of page: D, address: 10 to "12", if the sensor ineffective mode, forced VTR power supply ON mode is to be used together.

[Procedure after checking operations]

1) Select page: 0, address: 01, and set data: 01.
2) Select page: 2, address: 2E, and set data: 00.
3) Select page: F, address: 22, set data: 80, and press the PAUSE button of the adjustment remote commander.
4) Select page: D, address: 10, set data: 00, and press the PAUSE button of the adjustment remote commander.
5) Select page: 0, address: 01, and set data: 00.
6) Disconnect the power supply of the unit.

2-1-2. TAPE PATH ADJUSTMENT

1. Preparations for Adjustment

1) Clean the tape path face (tape guide, capstan shaft, pinch roller).
2) Connect the adjustment remote commander to the LANC jack.
3) Turn on the HOLD switch of the adjustment remote commander.
4) Select page: 0, address: 01, and set data: 01.
5) Select page: 2, address: 2E, and set data: 02.
6) Select page: F, address: 22, set data: 88, and press the PAUSE button of the adjustment remote commander.
(Be sure to perform "Processing after operation" after completing adjustments)
7) Connect the oscilloscope to VC-235 board CN1108 via CPC-13 jig (J-6082-443-A).
Channel 1: VC-235 board, CN1108 Pin ⑤
External trigger: VC-235 board, CN1108 Pin ⑧
8) Playback Hi8/standard 8 mm alignment tape for tracking.
(WR5-1NP(NTSC))
(WR5-1CP(PAL))
9) Check that the oscilloscope RF waveform is flat at the entrance and exit.
If not flat, adjust according to the separate volume "8 mm Video Mechanical Adjustment Manual VII [B Mechanism] ".
10) Perform "Processing after operations", after completing adjustment.

CN1108 of VC-235board

Pin No.	Signal Name	Pin No.	Signal Name
1	SWP	11	VCO
2	AFC F0	12	EVF VG
3	BPF MONI	13	DV RF SWP
4	F0 ADJ RF IN	14	RF IN
5	PB RF	15	CAP FG
6	REG GND	16	RF MON
7	RF AGC OUT	17	TMS
8	VC RF SWP	18	TCK
9	EVF BL	19	TDO
10	EVF BL 4.6V	20	TDI

Table 5-2-1

[Procedure after operations]

1) Connect the adjustment remote commander, and turn on the HOLD switch.
2) Select page: 0, address: 01, and set data: 01.
3) Select page: 2, address: 2E, and set data: 00.
4) Select page: F, address: 22, set data: 80, and press the PAUSE button of the adjustment remote commander.
5) Select page: 0, address: 01, and set data: 00.
6) Remove the power supply from the unit.

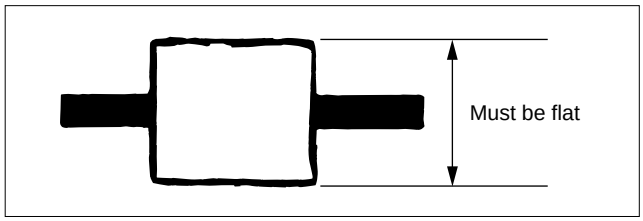

Fig. 5-2-1

2-2. DIGITAL8 MODE

2-2-1. HOW TO ENTER RECORD MODE WITHOUT CASSETTE

1) Connect the adjustment remote commander to the LANC jack.
2) Turn the HOLD switch of the adjustment remote commander to the ON position.
3) Close the cassette compartment without the cassette.
4) Select page: 3, address: 01, and set data: 0C, and press the PAUSE button of the adjustment remote commander.
   (The mechanism enters the record mode automatically)
   Note: The function buttons becomes inoperable.
5) To quit the record mode, select page: 3, address: 01, set data: 00, and press the PAUSE button of the adjustment remote commander. (Whenever you want to quit the record mode, be sure to quit following this procedure)

2-2-2. HOW TO ENTER PLAYBACK MODE WITHOUT CASSETTE

1) Connect the adjustment remote commander to the LANC jack.
2) Turn the HOLD switch of the adjustment remote commander to the ON position.
3) Close the cassette compartment without the cassette.
4) Select page: 3, address: 01, and set data: 0B, and press the PAUSE button of the adjustment remote commander.
   (The mechanism enters the playback mode automatically)
   Note: The function buttons becomes inoperable.
5) To quit the playback mode, select page: 3, address: 01, set data: 00, and press the PAUSE button of the adjustment remote commander. (Whenever you want to quit the playback mode, be sure to quit following this procedure)

2-2-3. OVERALL TAPE PATH CHECK

1. Recording of the tape path check signal

1) Clean the tape running side (tape guide, capstan shaft, pinch roller).
2) Connect the adjustment remote commander to the LANC jack.
3) Turn the HOLD switch of the adjustment remote commander to the ON position.
4) Set to the camera recording mode.
5) Select page: 3, address: 1C, set data: 5D, and press the PAUSE button of the adjustment remote commander.
6) Record for several minutes.
7) Release the camera recording mode.
8) Select page: 3, address: 1C, set data: 00, and press the PAUSE button.

2. Tape path check

1) Clean the tape running side (tape guide, capstan shaft, pinch roller).
2) Connect the adjustment remote commander to the LANC jack.
3) Turn the HOLD switch of the adjustment remote commander to the ON position.
4) Connect an oscilloscope to VC-235 board CN1108 via the CPC-13 jig (J-6082-443-A).
   Channel 1: VC-235 board, CN1108 Pin ⑯ (Note)
   External trigger: VC-235 board, CN1108 Pin ⑬
   Note: Connect a 75 Ω resistor between Pins ⑯ of CN1108 and ⑥ (GND).
5) Select page: 2, address: 2E, and set data: 01.
6) Playback the tape path check signal.
7) Select page: 3, address: 33, and set data: 08.
8) Select page: 3, address: 26, and set data: 31.
9) Check that the oscilloscope RF waveform is flat at the entrance and exit.
   If not flat, perform “2-1-2. TAPE PATH ADJUSTMENT “ of “2-1. Hi8/STANDARD 8 mm MODE”.
10) Select page: 3, address: 26, and set data: 00.
11) Select page: 3, address: 33, and set data: 00.
12) Select page: 2, address: 2E, and set data: 00.

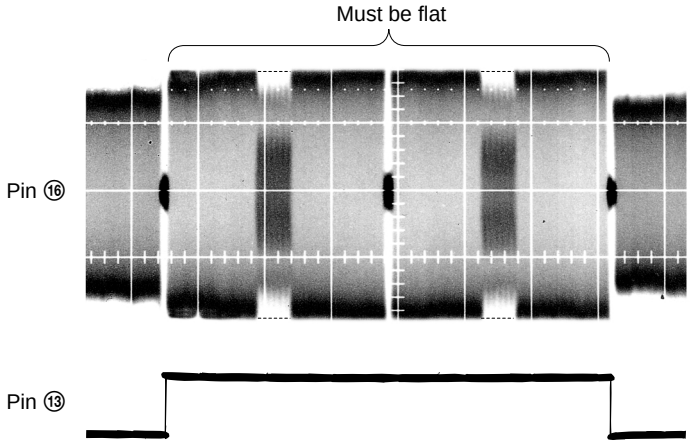

Fig. 5-2-2

5-3. VIDEO SECTION ADJUSTMENT

3-1. PREPARATIONS BEFORE ADJUSTMENTS

Use the following measuring instruments for video section adjustments.

Note: NTSC model: DCR-TRV120/TRV120P
PAL model: DCR-TRV120E/TRV125E/TR8000E/TR8100E

3-1-1. Equipment to Required

1) TV monitor
2) Oscilloscope (dual-phenomenon, band width above 30 MHz with delay mode) (Unless specified otherwise, use a 10 : 1 probe.)
3) Frequency counter
4) Pattern generator with video output terminal
5) Digital voltmeter
6) Audio generator
7) Audio level meter
8) Audio distortion meter
9) Audio attenuator
10) Regulated power supply
11) Digital8 alignment tapes
    - SW/OL standard (WR5-2D)
      Parts code: 8-967-993-22
    - Audio operation check for NTSC (WR5-3ND)
      Parts code: 8-967-993-32
    - System operation check for NTSC (WR5-5ND)
      Parts code: 8-967-993-42
    - Audio operation check for PAL (WR5-3CD)
      Parts code: 8-967-993-37
    - System operation check for PAL (WR5-5CD)
      Parts code: 8-967-993-47
12) NTSC Hi8/standard 8 mm alignment tapes (For NTSC model)
    - For tracking adjustment (WR5-1NP)
      Parts code: 8-967-995-02
    - For video frequency characteristics adjustment (WR5-7NE)
      Parts code: 8-967-995-13
    - For checking Standard 8 mode operations
      For LP (WR5-4NL)
      Parts code: 8-967-995-51
      For SP (WR5-5NSP)
      Parts code: 8-967-995-42

      Note: The following alignment tapes can also be used.
      WR5-4NSP (8-967-995-41)
    - For checking Hi8 mode operations
      For LP (WR5-8NLE)
      Parts code: 8-967-995-52
      For SP (WR5-8NSE)
      Parts code: 8-967-995-43
    - For Checking AFM stereo operations (WR5-9NS)
      Parts code: 8-967-995-23
    - For BPF adjustment (WR5-11NS)
      Parts code: 8-967-995-71
13) PAL Hi8/standard 8 mm alignment tapes (For PAL model)
    - For tracking adjustment (WR5-1CP)
      Parts code: 8-967-995-07
    - For video frequency characteristics adjustment (WR5-7CE)
      Parts code: 8-967-995-18
    - For checking Standard 8 mode operations
      For LP (WR5-4CL)
      Parts code: 8-967-995-56
      For SP (WR5-5CSP)
      Parts code: 8-967-995-47

      Note: The following alignment tapes can also be used.
      1) WR5-3CL (8-967-995-36)
      2) WR5-4CSP (8-967-995-46)
    - For checking Hi8 mode operations
      For LP (WR5-8CLE)
      Parts code: 8-967-995-57
      For SP (WR5-8CSE)
      Parts code: 8-967-995-48
    - For Checking AFM stereo operations (WR5-9CS)
      Parts code: 8-967-995-28
    - For BPF adjustment (WR5-11CS)
      Parts code: 8-967-995-76
14) Adjustment remote commander (J-6082-053-B)
15) CPC-13 jig (J-6082-443-A)
16) Power code (J-6082-223-A)

    Note: Connect the adjustment remote commander to the LANC jack, and set the HOLD switch to the "ADJ" side.
17) IR receiver jig (J-6082-383-A)

3-1-2. Precautions on Adjusting

1) The adjustments of this unit are performed in the VTR mode or camera mode.
   To set to the VTR mode, set the power switch to "VTR or PLAYER" or set the "Forced VTR Power ON mode" using the adjustment remote commander (Note 1).
   To set to the Camera mode, set the power switch to "CAMERA" or set the "Forced Camera Power ON mode" using the adjustment remote commander (Note 2).
   After completing adjustments, be sure to exit the "Forced VTR Power ON Mode" or "Forced Camera Power ON Mode". (Note 3)
2) The front panel block (MI-37 board, focus dial, microphone unit) need not be connected except during "Battery end adjustment" and "IR transmitter adjustment". To remove, disconnect the following connectors.
   VC-235 board CN1111 (32P 0.5 mm)
3) By setting the "Forced VTR Power ON mode" or "Forced Camera Power ON mode", the video section can be operate even if even if the cabinet (R) block (Camera function switch (CF-69/71 board), LCD block (TRV model only), viewfinder. power switch) has been removed. But removing the cabinet (R) block (removing the VC-235 board CN1105) means removing the lithium 3 V power supply (CF-69/71 board BH001) , data such as date, time, user-set menus will be lost. After completing adjustments, reset these data. If the cabinet (R) block has been removed, the self-diagnosis data, data on history of use (total drum rotation time etc.) will be lost. Before removing, note down the self-diagnosis data and data on history use (data of page: 2, address: A2 to AA). (Refer to "SELF-DIAGNOSIS FUNCTION" for the self-diagnosis data, and to "5-4. Service Mode" for the data on the history use.) To remove the cabinet (R), disconnect the following connectors.
   1. VC-235 board CN1105 (45P, 0.5 mm)
   2. VC-235 board CN1109 (8P, 1.0 mm) (TRV model only)
4) The lens block (CD-242/244/269 board) and the intelligent accessory shoe need not be connected except during "Battery end adjustment". To remove, disconnect the following connectors.
   1. VC-235 board CN1501 (16P, 0.5 mm)
   2. VC-235 board CN1551 (24P, 0.5 mm)
   3. Intelligent accessory shoe (8P, 0.8 mm)

Note 1: Setting the "Forced VTR Power ON" mode (VTR mode)
1) Select page: 0, address: 01, and set data: 01.
2) Select page: D, address: 10, set data: 02, and press the PAUSE button of the adjustment remote commander.
   The above procedure will enable the VTR power to be turned on with the power switch (SS-10000 block) removed.
   After completing adjustments, be sure to exit the "Forced VTR Power ON mode".

Note 2: Setting the "Forced Camera Power ON" mode (Camera mode)
1) Select page: 0, address: 01, and set data: 01.
2) Select page: D, address: 10, set data: 01, and press the PAUSE button of the adjustment remote commander.
   The above procedure will enable the camera power to be turned on with the power switch (SS-10000 block) removed.
   After completing adjustments, be sure to exit the "Forced Camera Power ON mode".

Note 3: Exiting the "Forced Power ON" mode
1) Select page: 0, address: 01, and set data: 01.
2) Select page: D, address: 10, set data: 00, and press the PAUSE button of the adjustment remote commander.
3) Select page: 0, address: 01, and set data: 00.

Note 4: TRV model: DCR-TRV120/TRV120E/TRV120P/TRV125E
TR model: DCR-TR8000E/TR8100E

	CF board	PD board
TRV model	CF-69	PD-117
TR model	CF-71	–

Note 5: 720H model: DCR-TRV120/TRV120P
960H model: DCR-TRV120E/TRV125E/TR8000E/TR8100E

	CD board
720H model	CD-242
960H model	CD-244/269

3-1-3. Adjusting Connectors

Some of the adjusting points of the video section are concentrated at VC-235 board CN1108. Connect the measuring instruments via the CPC-13 jig (J-6082-443-A). The following table lists the pin numbers and signal names of CN1108.

Pin No.	Signal Name	Pin No.	Signal Name
1	SWP	11	VCO
2	AFC F0	12	EVF VG
3	BPF MONI	13	DV RF SWP
4	F0 ADJ RF IN	14	RF IN
5	PB RF	15	CAP FG
6	REG GND	16	RF MON
7	RF AGC OUT	17	TMS
8	VC RF SWP	18	TCK
9	EVF BL	19	TDO
10	EVF BL 4.6V	20	TDI

Table 5-3-1

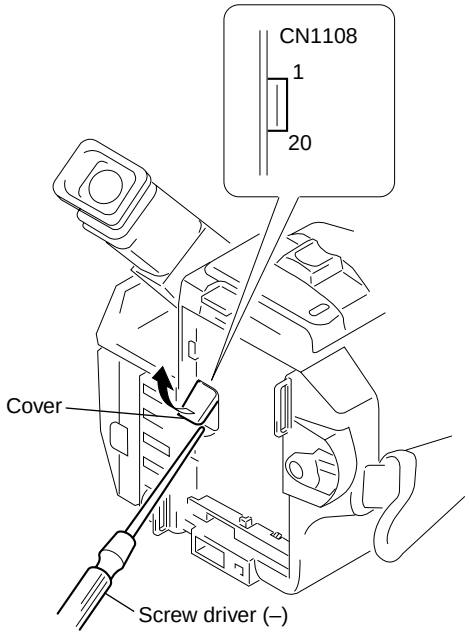

Fig. 5-3-1

3-1-4. Connecting the Equipment

Connect the measuring instruments as shown in Fig. 5-3-2 and perform the adjustments.

Connecting the TV Monitor and Regulated Power Supply

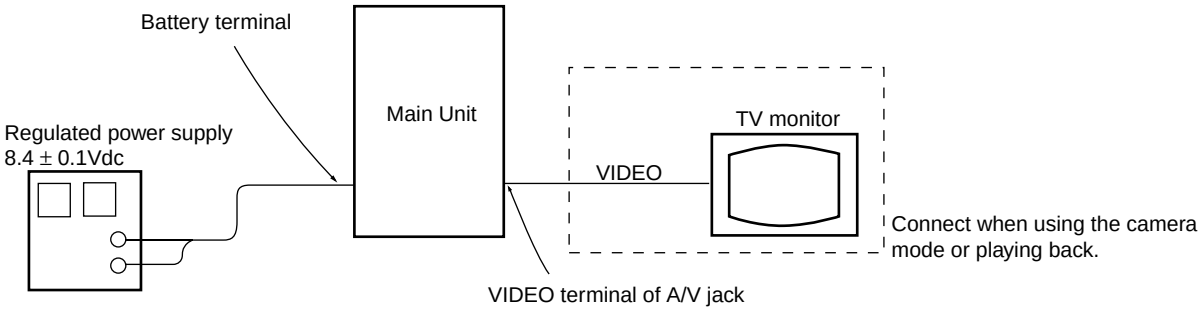

Fig. 5-3-2

3-1-5. Alignment Tape

The following table lists alignment tapes which are available.
Use the tape specified in the signal column for each adjustment. If the type of tape to be used for checking operations is not specified, use whichever type.

Digital8 alignment tape

Name	Usage
SW/OL standard (WR5-2D)	Switching position adjustment
Audio operation check (WR5-3ND (NTSC), WR5-3CD (PAL))	Audio system adjustment
System operation check (WR5-5ND (NTSC), WR5-5CD (PAL))	Operation check

Hi8/standard 8 mm alignment tape

Name	Recording mode	Tape type	Tape speed	Usage
Tracking (WR5-1NP(NTSC), WR5-1CP(PAL))	Standard 8 mm	MP	SP	Tape path adjustment, Switching position adjustment
Video frequency characteristics (WR5-7NE(NTSC), WR5-7CE(PAL))	Hi8	ME	SP(NTSC) LP(PAL)	Frequency characteristics adjustment
Operation check (WR5-5NSP(NTSC), WR5-5CSP(PAL))	Standard 8 mm	MP	SP	Operation check
Operation check (WR5-8NSE(NTSC), WR5-8CSE(PAL))	Hi8	ME	SP	
Operation check (WR5-4NL(NTSC), WR5-4CL(PAL))	Standard 8 mm	MP	LP	
Operation check (WR5-8NLE(NTSC), WR5-8CLE(PAL)	Hi8	ME	LP	
AFM stereo operation check WR5-9NS(NTSC), WR5-9CS(PAL)	Standard 8 mm	MP	SP	AFM stereo Operation check
BPF adjustment WR5-11NS(NTSC), WR5-11CS(PAL)	Standard 8 mm	MP	SP	BPF adjustment

Tape type
ME ..... Particle type metal tape
MP ..... Evaporated type metal tape

Table 5-3-2

Fig. 5-3-3 Shows the color bar signals recorded on the alignment tape.

Note: Measure using the VIDEO terminal (Terminated at 75 Ω).

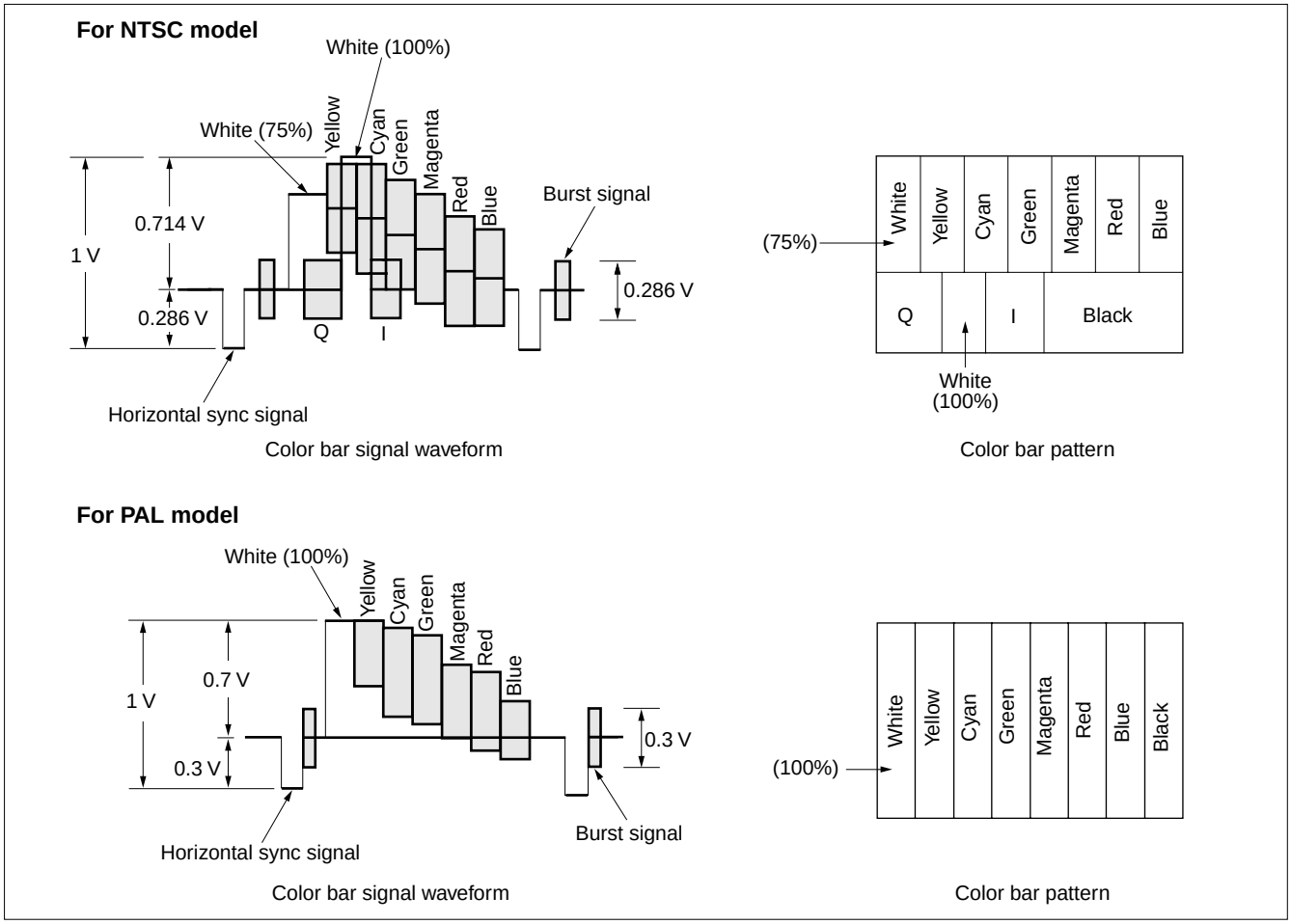

Fig. 5-3-3 Color Bar Signal of the Alignment Tape

3-1-6. Input/output Level and Impedance

Video input/output

Phono jack, 1 Vp-p, 75 Ω, unbalanced, sync negative

S video input/output

4-pin mini DIN

Luminance signal:

1 Vp-p, 75 Ω, unbalanced, sync negative

Chrominance signal:

0.286 Vp-p, 75 Ω, unbalanced (NTSC)

0.300 Vp-p, 75 Ω, unbalanced (PAL)

Audio input/output

Phono jack:

Input: –7.5 dBs, input impedance more than 47 kΩ

Output: –7.5 dBs, (at load impedance 47 kΩ), output impedance less than 2.2 kΩ

3-2. SYSTEM CONTROL SYSTEM ADJUSTMENT

1. Initialization of 7, 8, C, D, E, F Page Data

If the 7, 8, C, D, E, F page data is erased due to some reason, perform "1-2. INITIALIZATION OF 7, 8, C, D, E, F PAGE DATA", of "5-1. CAMERA SECTION ADJUSTMENT"

2. Node Unique ID No. Input

Note 1: Perform "2-2. Input of Serial No." if the data on page C has been cleared and the node unique ID No. is not found.

2-1. Input of Company ID

Write the company ID to the EEPROM (nonvolatile memory).

Page	C
Address	E8, E9, EA, EB, EC

Input method:

1) Select page: 0, address: 01, and set data: 01.
2) Enter the following data.

Note 2: Each time the data is set, press the PAUSE button on the adjusting remote commander.

Address	Data
E8	08
E9	00
EA	46
EB	01
EC	01

3) Select page: 0, address: 01, and set data: 00.

2-2. Input of Serial No.

Write the serial No. and model code to the EEPROM (nonvolatile memory).
In writing the serial No., a decimal number should be converted into a hexadecimal number.

Page	C
Address	ED, EE, EF

1) Select page: 0, address: 01, and set data: 01.
2) Read the serial No. from the model name label, and it is assumed to be D_1.
   Example: If serial No. is "77881",
   $D_1 = 77881$
3) From Table 5-3-3, obtain D_2 and H1 that correspond to D_1.
   Example: If $D_1 = 77881$,
   $D_2 = D_1 - 65536 = 12345$
   $H_1 = 00$

D_1 (decimal)	D_2 (decimal) (Service model code)	H_1 (hexadecimal)
00001 to 65535	D_1	00
65536 to 131071	$D_1 - 65536$	00
131072 to196607	$D_1 - 131072$	00
196608 to 262143	$D_1 - 196608$	00

Table 5-3-3

4) Enter H_1 to address: ED on page: C.
   Example: If $H_1 = 00$,
   select page: C, address: ED, and set data: 00, then press the PAUSE button.
5) From Table 5-3-4, obtain the maximum decimal number less than D_2, and it is assumed to be D_3.
   Example: If $D_2 = 12345$.
   $D_3 = 12288$
6) From Table 5-3-4, obtain a hexadecimal number that corresponds to D_3, and it is assumed to be H_3.
   Example: If $D_3 = 12288$,
   $H_3 = 3000$
7) Caluculate D_4 using following equations (decimal caluculation). ($0 \leqq D_4 \leqq 225$)
   $D_4 = D_2 - D_3$
   Example: If $D_2 = 12345$ and $D_3 = 12288$,
   $D_4 = 12345 - 12288 = 57$
8) Convert D_4 into a hexadecimal number to obtain H_4. (See Table 5-4-1 "Hexadecimal - decimal conversion table" in 5-4. Service Mode)
   Example: If $D_4 = 57$,
   $H_4 = 39$
9) Enter higher two digits of H_3 to address: EE on page: C.
   Example: If $H_3 = 3000$,
   select page: C, address: EE, and set data: 30, then press the PAUSE button.
10) Enter H_4 to address: EF on page: D.
    Example: If $H_4 = 39$,
    select page: C, address: EF, and set data: 39, then press the PAUSE button.
11) Select page: 0, address: 01, and set data: 00.

D_3	H_3	D_3	H_3	D_3	H_3	D_3	H_3	D_3	H_3	D_3	H_3	D_3	H_3	D_3	H_3
0	0000	8192	2000	16384	4000	24576	6000	32768	8000	40960	A000	49152	C000	57344	E000
256	0100	8448	2100	16640	4100	24832	6100	33024	8100	41216	A100	49408	C100	57600	E100
512	0200	8704	2200	16896	4200	25088	6200	33280	8200	41472	A200	49664	C200	57856	E200
768	0300	8960	2300	17152	4300	25344	6300	33536	8300	41728	A300	49920	C300	58112	E300
1024	0400	9216	2400	17408	4400	25600	6400	33792	8400	41984	A400	50176	C400	58368	E400
1280	0500	9472	2500	17664	4500	25856	6500	34048	8500	42240	A500	50432	C500	58624	E500
1536	0600	9728	2600	17920	4600	26112	6600	34304	8600	42496	A600	50688	C600	58880	E600
1792	0700	9984	2700	18176	4700	26368	6700	34560	8700	42752	A700	50944	C700	59136	E700
2048	0800	10240	2800	18432	4800	26624	6800	34816	8800	43008	A800	51200	C800	59392	E800
2304	0900	10496	2900	18688	4900	26880	6900	35072	8900	43264	A900	51456	C900	59648	E900
2560	0A00	10752	2A00	18944	4A00	27136	6A00	35328	8A00	43520	AA00	51712	CA00	59904	EA00
2816	0B00	11008	2B00	19200	4B00	27392	6B00	35584	8B00	43776	AB00	51968	CB00	60160	EB00
3072	0C00	11264	2C00	19456	4C00	27648	6C00	35840	8C00	44032	AC00	52224	CC00	60416	EC00
3328	0D00	11520	2D00	19712	4D00	27904	6D00	36096	8D00	44288	AD00	52480	CD00	60672	ED00
3584	0E00	11776	2E00	19968	4E00	28160	6E00	36352	8E00	44544	AE00	52736	CE00	60928	EE00
3840	0F00	12032	2F00	20224	4F00	28416	6F00	36608	8F00	44800	AF00	52992	CF00	61184	EF00
4096	1000	12288	3000	20480	5000	28672	7000	36864	9000	45056	B000	53248	D000	61440	F000
4352	1100	12544	3100	20736	5100	28928	7100	37120	9100	45312	B100	53504	D100	61696	F100
4608	1200	12800	3200	20992	5200	29184	7200	37376	9200	45568	B200	53760	D200	61952	F200
4864	1300	13056	3300	21248	5300	29440	7300	37632	9300	45824	B300	54016	D300	62208	F300
5120	1400	13312	3400	21504	5400	29696	7400	37888	9400	46080	B400	54272	D400	62464	F400
5376	1500	13568	3500	21760	5500	29952	7500	38144	9500	46336	B500	54528	D500	62720	F500
5632	1600	13824	3600	22016	5600	30208	7600	38400	9600	46592	B600	54784	D600	62976	F600
5888	1700	14080	3700	22272	5700	30464	7700	38656	9700	46848	B700	55040	D700	63232	F700
6144	1800	14336	3800	22528	5800	30720	7800	38912	9800	47104	B800	55296	D800	63488	F800
6400	1900	14592	3900	22784	5900	30976	7900	39168	9900	47360	B900	55552	D900	63744	F900
6656	1A00	14848	3A00	23040	5A00	31232	7A00	39424	9A00	47616	BA00	55808	DA00	64000	FA00
6912	1B00	15104	3B00	23296	5B00	31488	7B00	39680	9B00	47872	BB00	56064	DB00	64256	FB00
7168	1C00	15360	3C00	23552	5C00	31744	7C00	39936	9C00	48128	BC00	56320	DC00	64512	FC00
7424	1D00	15616	3D00	23808	5D00	32000	7D00	40192	9D00	48384	BD00	56576	DD00	64768	FD00
7680	1E00	15872	3E00	24064	5E00	32256	7E00	40448	9E00	48640	BE00	56832	DE00	65024	FE00
7936	1F00	16128	3F00	24320	5F00	32512	7F00	40704	9F00	48896	BF00	57088	DF00	65280	FF00

Note: D_3: Decimal
H_3: Hexadecimal

Table 5-3-4

3. Battery End Adjustment (VC-235 board)

Set the battery end voltage.
If the voltage is incorrect, the life of the battery will shorten.
The image at the battery end will also be rough.

Mode	Camera recording
Subject	Arbitrary
Measurement Point	LCD display of the adjustment remote commander
Measuring Instrument	
Adjustment Page	D
Adjustment Address	48, 49

Note 1: The lens block and cabinet (R) must be connected.

Switch setting

1) AUTO FOCUS ..... OFF
2) LCD screen (TRV model) ..... Closed
3) NIGHT SHOT ..... OFF

Note 2: TRV model: DCR-TRV120/TRV120E/TRV120P/TRV125E

Connection:

1) Connect the regulated power supply and the digital voltmeter to the battery terminal as shown in Fig. 5-3-4.

Adjusting method:

1) Adjust the output voltage of the regulated power supply so that the digital voltmeter display is 6.1 ± 0.1 Vdc.
2) Turn off the power supply.
3) Turn on the HOLD switch of the adjustment remote commander.
4) Turn on the power supply.
5) Load a cassette, and set to the camera recording mode.
6) Select page: 0, address: 01, and set data: 01.
7) Decrease the output voltage of the regulated power supply so that the digital voltmeter display is 5.30 ± 0.01 Vdc.
8) Select page: 2, address: 5D, read the data, and this data is named Dref.
9) Select page: D, address: 48, set data: Dref, and press the PAUSE button of the adjustment remote commander.
10) Convert Dref to decimal notation, and obtain Dref'. (Refer to Table 5-4-1 "Hexadecimal-decimal conversion table" of "5-4. Service Mode")
11) Calculate D_{49}' using following equations (decimal calculation), convert it to a hexdecimal number, and obtain D_{49}.
    D_{49}'=Dref'+8
12) Select page: D, address: 49, set data D_{49}, and then press the PAUSE button of adjustment remote commander.
13) Select page: 0, address: 01, and set data: 00.

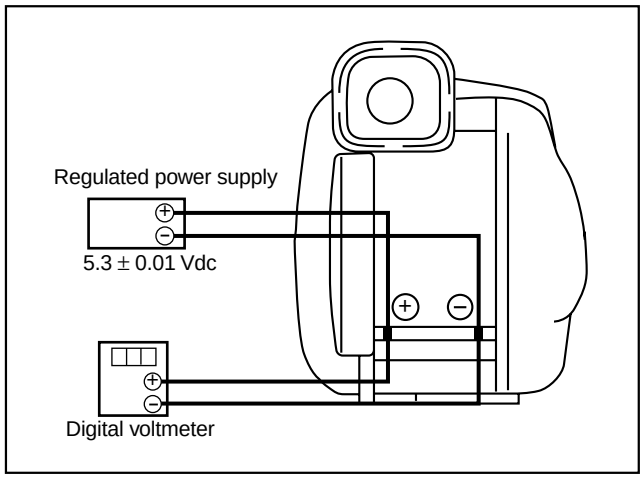

Fig. 5-3-4

3-3. SERVO AND RF SYSTEM ADJUSTMENTS

Before perform the servo and RF system adjustments, check that the specified value of "27 MHz/36MHz Origin Oscillation Adjustment" of "3-4. VIDEO SYSTEM ADJUSTMENT" is satisfied.

Adjusting Procedure:

1. REEL FG adjustment
2. PLL f_0 & LPF f_0 Pre-adjustment
3. Switching position adjustment
4. AGC center level adjustment
5. APC & AEQ adjustment
6. PLL f_0 & LPF f_0 final adjustment
7. Hi8/standard 8 mm switching position adjustment
8. CAP FG offset adjustment

1. REEL FG Adjustment (VC-235 board)

Mode	VTR stop
Measurement Point	Display data of page: 3, address: 03
Measuring Instrument	Adjustment remote commander
Adjustment Page	C
Adjustment Address	17, 30
Specified Value	Bit values of bit 1 and bit 3 are "0"

Adjusting method:

1) Close the cassette compartment without loading a cassette and complete loading.
2) Select page: 0, address: 01, and set data: 01.
3) Select page: 3, address: 01, set data: 1C, and press the PAUSE button of the adjustment remote commander.
4) Select page: 3, address: 02, and check that the data changes to "00".
5) Select page: 3, address: 03, and check that bit values of bit 1 and bit 3 are "0".
   If bit value of bit 1 and bit 3 is "1", there are errors. For the error contents, see the following table. (For the bit values, refer to "5-4. SERVICE MODE", "4-3. 3. Bit value discrimination")

Bit value of page: 3, address: 03	Error contents
bit 3 = 1	S REEL is defective
bit 1 = 1	T REEL is defective

6) Select page: 0, address: 01, and set data: 00.

2. PLL f_0 & LPF f_0 Pre-adjustment (VC-235 board)

Mode	VTR stop
Measurement Point	Display data of page: 3, address: 03
Measuring Instrument	Adjustment remote commander
Adjustment Page	C
Adjustment Address	1F, 20, 22, 29
Specified Value	Bit values of bit 2, bit 3 and bit 6 are "0"

Adjusting method:

1) Select page: 0, address: 01, and set data: 01.
2) Select page: 3, address: 01, set data: 30, and press the PAUSE button of the adjustment remote commander.
3) Select page: 3, address: 02, and check that the data changes to "00".
4) Select page: 3, address: 03, and check that bit values of bit2, bit3 and bit6 are "0".
   If bit value of bit 2, bit 3 or bit 6 is "1", there are errors. For the error contents, see the following table. (For the bit values, refer to "5-4. SERVICE MODE", "4-3. 3. Bit value discrimination")

Bit value of page: 3, address: 03	Error contents
bit 6 = 1	LPF f_0 adjustment is defective
bit 3 = 1	PLL f_0, fine adjustment is defective
bit 2 = 1	PLL f_0, fine adjustment is defective

If bit value of bit 2 or bit 3 is "1", select page: C, address: 21, set the following data, and press the PAUSE button, and repeat steps 2) to 4).

	Setting data
When the data of page: C, address: 21 is "CA"	CE
When the data of page: C, address: 21 is "CE"	C6
When the data of page: C, address: 21 is "C6"	D2
When the data of page: C, address: 21 is "D2"	C2

5) Select page: 0, address: 01, and set data: 00.

3. Switching Position Adjustment (VC-235 board)

To obtain normal playback waveform output, adjust the switching position.

Mode	VTR playback
Signal	Digital8 alignment tape : SW/OL standard (WR5-2D)
Measurement Point	Display data of page: 3, address: 03
Measuring Instrument	Adjustment remote commander
Adjustment Page	C
Adjustment Address	10, 11, 12, 13
Specified Value	00

Adjusting method:

1) Insert the Digital8 SW/OL reference tape and enter the VTR STOP mode.
2) Select page: 0, address: 01, and set data: 01.
3) Select page: 3, address: 21, and check that the data is "02".
   Note: If the data of page: 3, address: 21 is other than "72", the tape top being played. After playing the tape for 1 to 2 seconds, perform step 4) and higher.
   If the data of page: 3, address: 21 is other than "62", the tape end being played. After rewind the tape, perform step 4) and higher.
4) Select page: 3, address: 01, set data: 0D, and press the PAUSE button of the adjustment remote commander.
5) Select page: 3, address: 02, wait data for stable condition as "00".
6) Select page: 3, address: 03, and check that the data is "00".
   Note: If bit 0 of page: 3, address: 03 data is "1", the A channel is defective. If bit 1 is "1", the B channel is defective. Contents of the defect is written into page: C, addresses: 10 and 12. See the following table. (For the bit values, refer to "5-4. SERVICE MODE", "4-3. 3. Bit value discrimination")
7) Select page: 0, address: 01, and set data: 00.

When the A channel is defective

Data of page: C, address: 10	Contents of defect
EE	Writing into EEPROM (IC4502) is defective
E8	Adjustment data is out of range
E7	No data is returned from IC3301 (CAIN)

When the B channel is defective

Data of page: C, address: 12	Contents of defect
E8	Adjustment data is out of range
E7	No data is returned from IC3301 (CAIN)

4. AGC Center Level Adjustment (VC-235 board)

Mode	Camera record and playback
Subject	Arbitrary
Measurement Point	Pin ⑯ of CN1108 (RF MON) (Note 1) External trigger : Pin ⑬ of CN1108 (DV RF SWP)
Measuring Instrument	Oscilloscope
Adjustment Page	C
Adjustment Address	1E
Specified Value	The display data of page: 3, address: 03 is "00"

Note 1: Connect a 75 Ω resistor between Pin ⑯ and Pin ⑥ (GND) of CN1108.
75 Ω resistor (Parts code: 1-247-804-11)

Note 2: Use a Hi8 MP tape.

Adjusting method:

1) Select page: 0, address: 01, and set data: 01.
2) Select page: 8, address: 2A, set data: C8, and press the PAUSE button of the adjustment remote commander.
3) Record the camera signal for a minute.
4) Select page: 2, address: 2E, and set data: 01.
5) Playback the recorded segment.
6) Select page: 3, address: 33, and set data: 08.
7) Confirm that the playback RF signal is stable.
8) Select page: 3, address: 01, set data: 23, and press the PAUSE button.
9) Select page: 3, address: 02, and check that the data is "00".
10) Select page: 3, address: 03, and check that the data is "00".
    Note 3: If the data of page: 3, address: 03 is other than "00", adjustment has errors.
11) Select page: 3, address: 33, and set data: 00.
12) Select page: 2, address: 2E, and set data: 00.
13) Select page: 8, address: 2A, set data: 00, and press the PAUSE button.
14) Select page: 0, address: 01, and set data: 00.

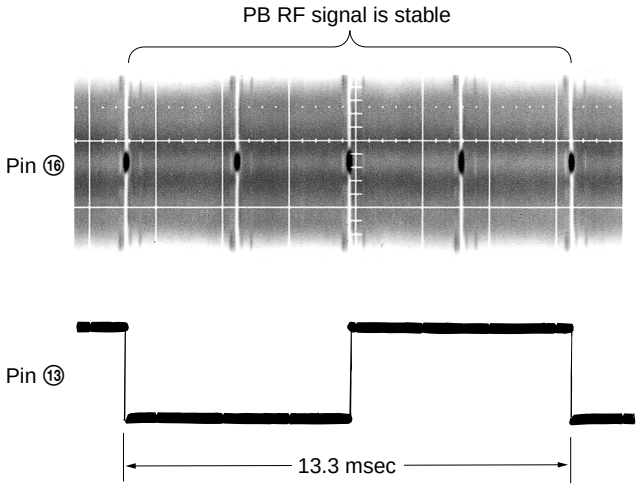

Fig. 5-3-5

5. APC & AEQ Adjustment (VC-235 board)

Mode	Camera record and playback
Subject	Arbitrary
Measurement Point	Pin ⑯ of CN1108 (RF MON) (Note 1) External trigger : Pin ⑬ of CN1108 (DV RF SWP)
Measuring Instrument	Oscilloscope
Adjustment Page	C
Adjustment Address	18, 19, 1B, 1C, 21, 2C
Specified Value	The display data of page: 3, address: 03 is "00"

Note 1: Connect a 75 Ω resistor between Pin ⑯ and Pin ⑥ (GND) of CN1108.
75 Ω resistor (Parts code: 1-247-804-11)

Note 2: Use a Hi8 MP tape.

Adjusting method:

1) Select page: 0, address: 01, and set data: 01.
2) Select page: 8, address: 2A, set data: C8, and press the PAUSE button of the adjustment remote commander.
3) Record the camera signal for a minute.
4) Select page: 2, address: 2E, and set data: 01.
5) Playback the recorded segment.
6) Select page: 3, address: 33, and set data: 08.
7) Confirm that the playback RF signal is stable.
8) Select page: 3, address: 01, set data: 07, and press the PAUSE button.
9) Select page: 3, address: 02, and check that the data changes from "07" to "00" in about 20 seconds after pressing the PAUSE button.
10) Select page: 3, address: 03, and check that the data is "00".
    Note 3: If the data of page: 3, address: 03 is other than "00", adjustment has errors.
11) Select page: 3, address: 33, and set data: 00.
12) Select page: 2, address: 2E, and set data: 00.
13) Select page: 8, address: 2A, set data: 00, and press the PAUSE button.
14) Select page: 0, address: 01, and set data: 00.

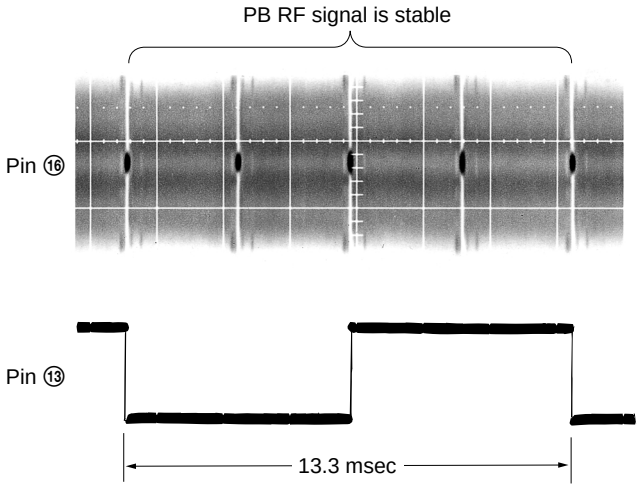

Fig. 5-3-6

6. PLL f_0 & LPF f_0 Final Adjustment (VC-235 board)

Mode	VTR stop
Signal	Arbitrary
Measurement Point	Display data of page: 3, address: 03
Measuring Instrument	Adjustment remote commander
Adjustment Page	C
Adjustment Address	1F, 20, 22, 29
Specified Value	Bit values of bit2, bit3 and bit6 are "0"

Adjusting method:

1) Select page: 0, address: 01, and set data: 01.
2) Select page: 3, address: 01, set data: 30, and press the PAUSE button of the adjustment remote commander.
3) Select page: 3, address: 02, and check that the data changes to "00".
4) Select page: 3, address: 03, and check that bit values of bit2, bit3 and bit6 are "0".
    Note: If bit value of bit 2, bit 3 or bit 6 is "1", there are errors. For the error contents, see the following table. (For the bit values, refer to "5-4. SERVICE MODE", "4-3. 3. Bit value discrimination")

Bit value of page: 3, address: 03	Error contents
bit 6 = 1	LPF f_0 adjustment is defective
bit 3 = 1	PLL f_0, fine adjustment is defective
bit 2 = 1	PLL f_0, fine adjustment is defective

5) Select page: 0, address: 01, and set data: 00.

7. Hi8/standard 8 mm Switching Position Adjustment (VC-235 board)

If deviated in this case causes switching noise or jitter on the Hi8/standard 8 mm mode played back screen.

Mode	Playback
Signal	Hi8/standard 8 mm alignment tape: For tracking adjustment (WR5-1NP(NTSC)) (WR5-1CP(PAL))
Measurement Point	CH1: Pin ⑧ of CN1108 (VC RF SWP) CH2: Pin ⑤ of CN1108 (PB RF)
Measuring Instrument	Oscilloscope
Adjustment Page	F
Adjustment Address	62, 63
Specified Value	t1=0 ± 10 µsec

Adjusting Method:

1) Select page: 0, address: 01, and set data: 01.
2) Select page: F, address: 22, set data: C0, and press the PAUSE button of the adjustment remote commander.
3) Select page: 2, address: 2E, and set data: 02.
4) Set to the playback mode.
5) Select page: F, address: 62, change the data and minimize "t1", and then press the PAUSE button. (Coarse adjustment)
6) Select page: F, address: 63, change the data and adjust so that the switching position (t1) becomes the specified value. (Fine adjustment)
7) Press the PAUSE button.
8) Select page: F, address: 22, set data: 80, and press the PAUSE button.
9) Select page: 2, address: 2E, and set data: 00.
10) Select page: 0, address: 01, and set data: 00.

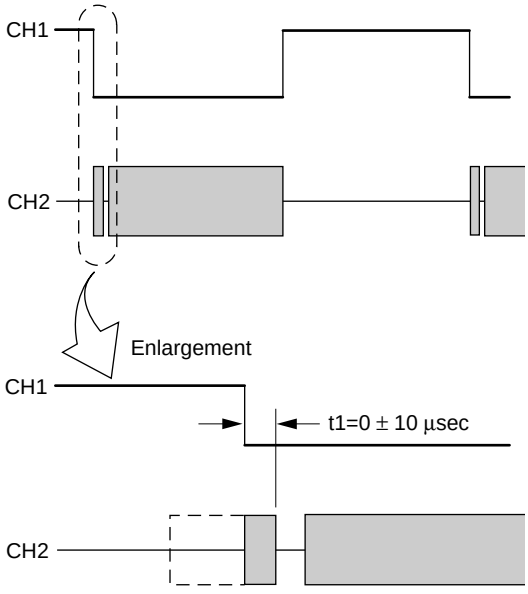

Fig. 5-3-7

8. CAP FG Duty Adjustment (VC-235 board)

Improve the capstan servo characteristic. If it is not correct. jitters will increase.

Mode	Playback
Signal	Hi8/standard 8 mm alignment tape: For checking operation (WR5-5NSP(NTSC)) (WR5-5CSP(PAL))
Measurement Point	Pin ⑮ of CN1108 (CAP FG)
Measuring Instrument	Oscilloscope
Adjustment Page	F
Adjustment Address	64
Specified value	Duty=50 ± 1%

Adjusting method:

1) Select page: 0, address: 01, and set data: 01.
2) Select page: 2, address: 2E, and set data: 02.
3) Set to the playback mode.
4) Select page: 6, address: 01, set data: 81, and press the PAUSE button of the adjustment remote commander. (to start up automatic CAP FG offset adjustment.)
5) Select page: 6, address: 02, and check that the data is "01".
6) Check that Duty of CAP FG signal satisfies the specified value. If not, select page: 6, address: 01, set data: 00, and press the PAUSE button, and then, repeat steps 4) to 6).
7) Select page: 6, address: 01, set data: 00, and press the PAUSE button.
8) Select page: 2, address: 2E, and set data: 00.
9) Select page: 0, address: 01, and set data: 00.

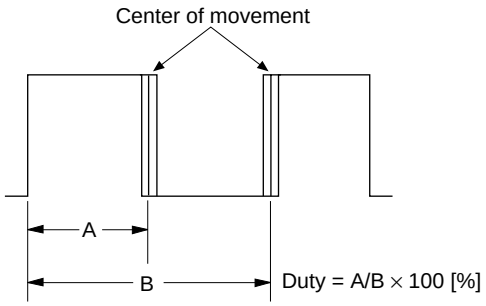

Fig. 5-3-8

3-4. VIDEO SYSTEM ADJUSTMENTS

3-4-1. Video System Adjustments

Adjusting Procedure:

1. 27 MHz/36 MHz origin oscillation adjustment
2. Chroma BPF f_0 adjustment
3. S VIDEO OUT Y Level Adjustment
4. S VIDEO OUT chroma level adjustment
5. VIDEO OUT Y, chroma level check
6. Hi8/standard 8 mm AFC f_0 adjustment

1. 27 MHz/36 MHz Origin Oscillation Adjustment (VC-235 board)

Set the oscillation frequency of X1501.
If deviated, the synchronization will be disrupted and the color will become inconsistent.

Note: 27 MHz ..... 720H model
36 MHz ..... 960H model
720H model: DCR-TRV120/TRV120P
960H model: DCR-TRV120E/TRV125E/TR8000E/TR8100E

Mode	Camera
Measurement Point	Pin ⑧① of IC2201
Measuring Instrument	Frequency counter
Adjustment Page	F
Adjustment Address	4D
Specified Value	f=13500000 ± 68 Hz

Adjusting method:

1) Select page: 0, address: 01, and set data: 01.
2) Select page: F, address: 4D, change the data and set the clock frequency(f) to the specified value.
3) Press the PAUSE button of the adjustment remote commander.
4) Select page: 0, address: 01, and set data: 00.

VC-235 BOARD

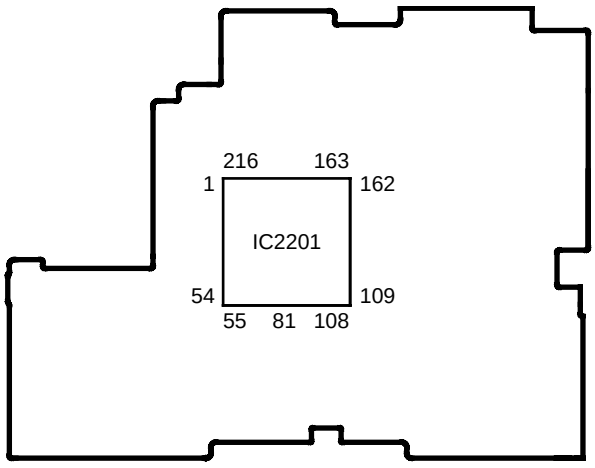

2. Chroma BPF f_0 Adjustment (VC-235 board)

Set the center frequency of IC3701 chroma band-pass filter.

Mode	VTR stop
Signal	No signal
Measurement Point	CH1: Chroma signal terminal of S VIDEO jack (75 Ω terminated) CH2: Y signal terminal of S VIDEO jack (75 Ω terminated)
Measuring Instrument	Oscilloscope
Adjustment Page	C
Adjustment Address	28
Specified Value	A = 100 mVp-p or less B = 200 mVp-p or more

Adjusting method:

1) Select page: 0, address: 01, and set data: 01.
2) Select page: D, address: 11, set data: 10, and press the PAUSE button of the adjustment remote commander.
3) Check that the burst signal (B) is output to the chroma signal terminal of S VIDEO jack.
4) Select page: 3, address: 0C, set data: 04, and press the PAUSE button.
5) Select page: C, address: 28, and change the data for minimum amplitude of the burst signal level (A).
(The data of address: 28, should be “00” to “07”)
6) Press the PAUSE button.
7) Select page: 3, address: 0C, set data: 00, and press the PAUSE button.
8) Check that the burst signal level (B) satisfies the specified value.
9) Select page: D, address: 11, set data: 00, and press the PAUSE button.
10) Select page: 0, address: 01, and set data: 00.

When the data of page: 3, address: 0C, is 04:

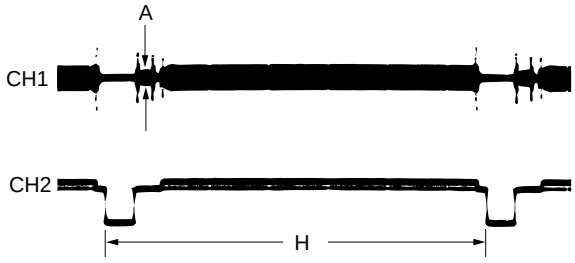

Fig. 5-3-9

When the data of page: 3, address: 0C, is 00:

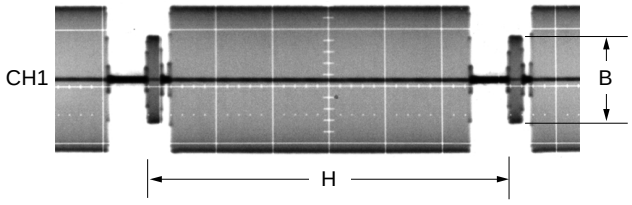

Fig. 5-3-10

3. S VIDEO OUT Y Level Adjustment (VC-235 board)

Mode	VTR stop
Subject	Arbitrary
Measurement Point	Y signal terminal of S VIDEO jack (75 Ω terminated)
Measuring Instrument	Oscilloscope
Adjustment Page	C
Adjustment Address	25
Specified Value	A = 1000 ± 20 mV

Adjusting method:

1) Select page: 0, address: 01, and set data: 01.
2) Select page: D, address: 11, set data: 10, and press the PAUSE button of the adjustment remote commander.
3) Select page: 3, address: 0C, set data: 02, and press the PAUSE button.
4) Select page: C, address: 25, change the data and set the Y signal level (A) to the specified value.
5) Press the PAUSE button.
6) Select page: 3, address: 0C, set data: 00, and press the PAUSE button.
7) Select page: D, address: 11, set data: 00, and press the PAUSE button.
8) Select page: 0, address: 01, and set data: 00.

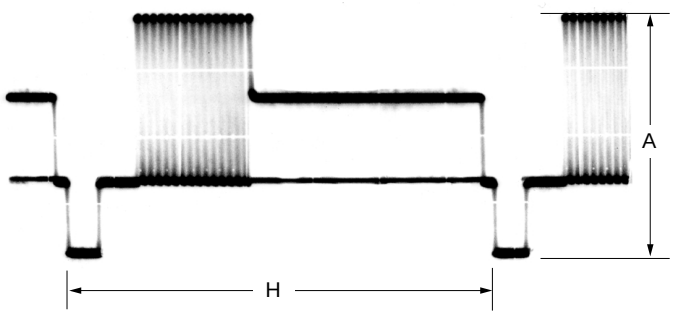

Fig. 5-3-11

4. S VIDEO OUT Chroma Level Adjustment (VC-235 board)

Mode	VTR stop
Subject	Arbitrary
Measurement Point	Chroma signal terminal of S VIDEO jack (75 Ω terminated) External trigger: Y signal terminal of S VIDEO jack
Measuring Instrument	Oscilloscope
Adjustment Page	C
Adjustment Address	26, 27
Specified Value	Cr level: A=714 ± 14 mV (NTSC) A=700 ± 14 mV (PAL) Cb level: B=714 ± 14 mV (NTSC) B=700 ± 14 mV (PAL) Burst level: C=286 ± 6 mV (NTSC) C=300 ± 6 mV (PAL)

Adjusting method:

1) Select page: 0, address: 01, and set data: 01.
2) Select page: D, address: 11, set data: 10, and press the PAUSE button of the adjustment remote commander.
3) Select page: 3, address: 0C, set data: 02, and press the PAUSE button.
4) Select page: C, address: 26, change the data and set the Cr signal level (A) to the specified value.
5) Press the PAUSE button.
6) Select page: C, address: 27, change the data and set the Cb signal level (B) to the specified value.
7) Press the PAUSE button.
8) Check that the burst signal level (C) is satisfied the specified value.
9) Select page: 3, address: 0C, set data: 00, and press the PAUSE button.
10) Select page: D, address: 11, set data: 00, and press the PAUSE button.
11) Select page: 0, address: 01, and set data: 00.

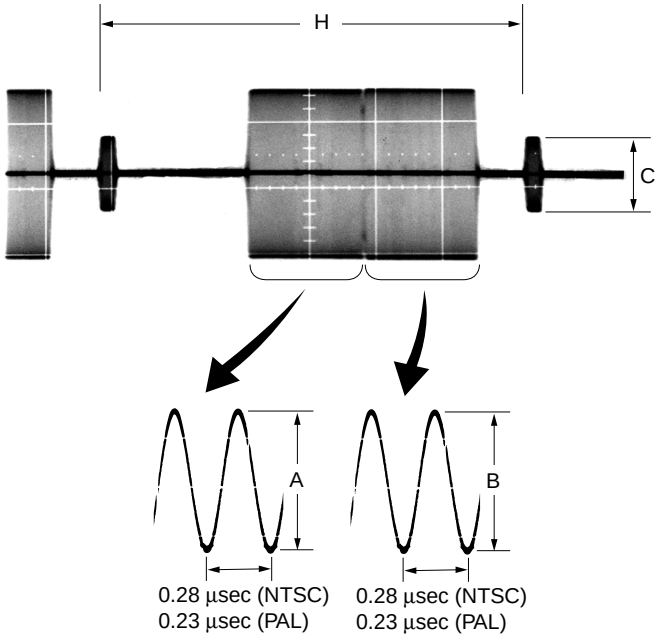

Fig. 5-3-12

5. VIDEO OUT Y, Chroma Level Check (VC-235 board)

Mode	VTR stop
Subject	Arbitrary
Measurement Point	VIDEO jack (75 Ω terminated)
Measuring Instrument	Oscilloscope
Specified Value	Sync level: A=286 ± 18 mV (NTSC) A=307 ± 18 mV (PAL) Burst level: B=286 ± 18 mV (NTSC) B=300 ± 18 mV (PAL)

Adjusting method:

1) Select page: 0, address: 01, set data: 01.
2) Select page: D, address: 11, set data: 10, and press the PAUSE button of the adjustment remote commander.
3) Select page: 3, address: 0C, set data: 02, and press the PAUSE button.
4) Check that the sync signal level (A) satisfies the specified value.
5) Check that the burst signal level (B) satisfies the specified value.
6) Select page: 3, address: 0C, set data: 00, and press the PAUSE button.
7) Select page: D, address: 11, set data: 00, and press the PAUSE button.
8) Select page: 0, address: 01, set data: 00.

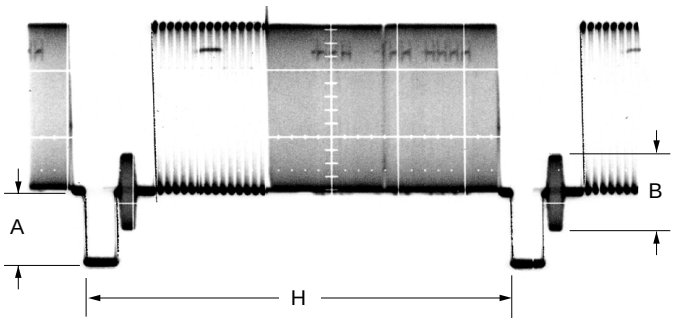

Fig. 5-3-13

6. Hi8/standard 8 mm AFC f_0 Adjustment (VC-235 board) (Using Digital Voltmeter)

Adjust the pull-in range of the clock generator (IC2201) for A/D conversion during Hi8/standard 8 mm playback.

Mode	VTR stop
Signal	No signal
Measurement Point	Pin ② of CN1108 (AFC f0)
Measuring Instrument	Digital voltmeter
Adjustment Page	F
Adjustment Address	65
Specified Value	A=2.00 ± 0.05 Vdc

Adjusting method:

1) Select page: 0, address: 01, and set data: 01.
2) Select page: 3, address: 0D, set data: 04, and press the PAUSE button of the adjustment remote commander.
3) Select page: 6, address: 63, set data: 04.
4) Select page: 6, address: 6F, set data: 01.
5) Select page: F, address: 65, change the data and set the DC voltage (A) to the specified value.
6) Press the PAUSE button.
7) Select page: 3, address: 0D, set data: 00, and press the PAUSE button.
8) Select page: 6, address: 63, set data: 00.
9) Select page: 6, address: 6F, set data: 00.
10) Select page: 0, address: 01, and set data: 00.

7. Hi8/standard 8 mm AFC f_0 Adjustment (VC-235 board) (Auto Adjustment)

Adjust the pull-in range of the clock generator (IC2201) for A/D conversion during Hi8/standard 8 mm playback.

Mode	VTR stop
Signal	No signal
Measurement Point	Display data of Page: 6, Address: 6E
Measuring Instrument	Adjustment remote commander
Adjustment Page	F
Adjustment Address	65
Specified Value	B2 to BA

Adjusting method:

1) Select page: 0, address: 01, and set data: 01.
2) Select page: 3, address: 0D, set data: 04, and press the PAUSE button of the adjustment remote commander.
3) Select page: 6, address: 63, set data: 04.
4) Select page: 6, address: 6F, set data: 01.
5) Select page: 6, address: 01, set data: C5, and press the PAUSE button.
6) Select page: 6, address: 02, and check that the data is “01”.
7) Select page: 6, address: 6E, and check that the display data satisfies the specified value.
8) Select page: 3, address: 0D, set data: 00, and press the PAUSE button.
9) Select page: 6, address: 01, set data: 00, and press the PAUSE button.
10) Select page: 6, address: 63, set data: 00.
11) Select page: 6, address: 6F, set data: 00.
12) Select page: 0, address: 01, and set data: 00.

3-5. IR TRANSMITTER ADJUSTMENTS

Adjust using a IR receiver jig (J-6082-383-A).

Switch setting:
LASER LINK ..... ON (Red LED is lit)

1. IR Video Carrier Frequency Adjustment (MI-37 board)

Mode	VTR stop
Signal	No signal
Measurement Point	Pin ⑤ of CN003 of IR receiver jig (RF)
Measuring Instrument	Frequency counter
Adjustment Page	F
Adjustment Address	80
Specified Value	f=11.85 ± 0.05 MHz (NTSC model) f=11.55 ± 0.05 MHz (PAL model)

Note: NTSC model: DCR-TRV120/TRV120P
PAL model: DCR-TRV120E/TRV125E/TR8000E/TR8100E

Connection of Equipment
Connect the measuring device as shown in the following figure, and adjust.

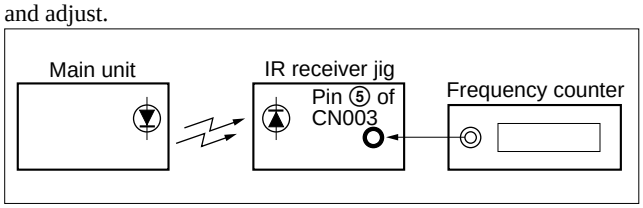

Fig. 5-3-14

Adjusting method:
1) Select page: 0, address: 01, and set data: 01.
2) Select page: 3, address: 0C, set data: 08, and press the PAUSE button of the adjustment remote commander.
3) Select page: F, address: 80, change the data, and set the video carrier frequency (f) to the specified value.
4) Press the PAUSE button.
5) Select page: 3, address: 0C, set data: 00, and press the PAUSE button.
6) Select page: 0, address: 01, and set data: 00.

2. IR Video Deviation Adjustment (MI-37 board)

Mode	VTR stop
Signal	No signal
Measurement Point	VIDEO OUT terminal of IR receiver jig (Terminated at 75 Ω)
Measuring Instrument	Oscilloscope
Adjustment Page	F
Adjustment Address	7E
Specified Value	A=0.82 ± 0.05 V

Connection of Equipment
Connect the measuring device as shown in the following figure, and adjust.

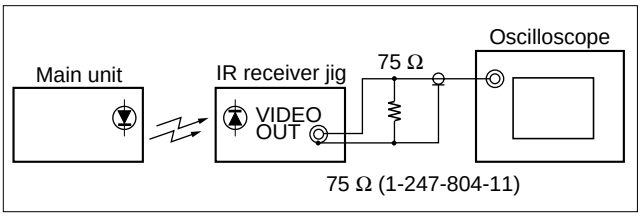

Fig. 5-3-15

Adjusting method:
1) Select page: 0, address: 01, and set data: 01.
2) Select page: 3, address: 0C, set data: 01, and press the PAUSE button of the adjustment remote commander.
3) Select page: F, address: 7E, and change the data, set the video signal amplitude (A) to the specified value.
4) Press the PAUSE button.
5) Select page: 3, address: 0C, set data: 00, and press the PAUSE button.
6) Select page: 0, address: 01, and set data: 00.

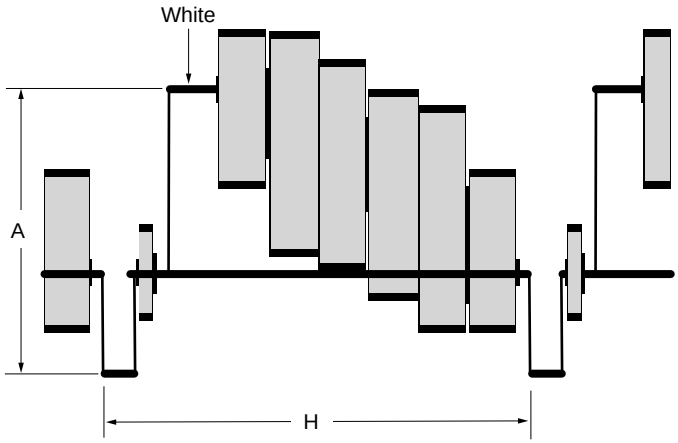

Fig. 5-3-16

3. IR Audio Deviation Adjustment (MI-37 board)

Mode	VTR stop
Signal	Audio signal: 400 Hz, –7.5 dBs: Audio left and right terminal of A/V jack Video signal: Color bar signal: VIDEO terminal of A/V jack
Measurement Point	AUDIO L terminal and AUDIO R terminal of IR receiver jig (Terminated at 47 kΩ)
Measuring Instrument	Audio level meter
Adjustment Page	F
Adjustment Address	7F
Specified Value	Signal level: –7.5 ± 1.0 dBs Level difference of L and R: Below 2 dB

Note: TR model: DCR-TR8000E/TR8100E

Connection of Equipment

Connect the measuring device as shown in the following figure, and adjust.

Adjusting method:

1) Select page: 0, address: 01, and set data: 01.
2) Only for the TR model (Note), Select page: D, address: 20, set data: 01, and press the PAUSE button of the adjustment remote commander.
3) Connect the audio level meter to the AUDIO L terminal of the IR receiver jig.
4) Select page: F, address: 7F, change the data and set the 400 Hz audio signal level to the specified value.
5) Press the PAUSE button.
6) Connect the audio level meter to the AUDIO R terminal of the IR receiver jig.
7) Check that the 400 Hz audio signal level is within the specified value. If outside, repeat from step 3).
8) Only for the TR model (Note), Select page: D, address: 20, set data: 00, and press the PAUSE button.
9) Select page: 0, address: 01, and set data: 00.

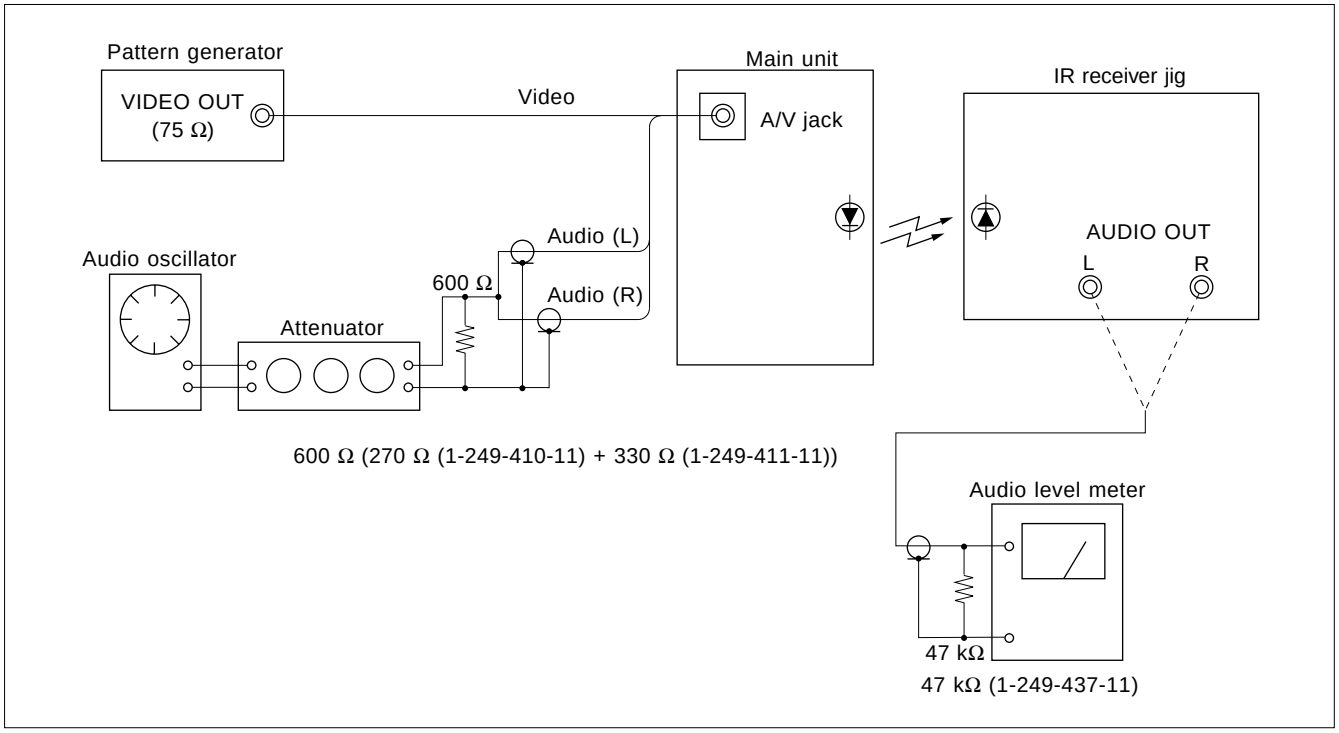

Fig. 5-3-17

3-6. AUDIO SYSTEM ADJUSTMENTS

[Connecting the measuring instruments for the audio]
Connect the audio system measuring instruments in addition to the video system measuring instruments as shown in Fig. 5-3-22.

[Adjustment Procedure]
1) Hi8/standard 8 mm AFM BPF f_0 adjustment
2) Hi8/standard 8 mm AFM 1.5 MHz deviation adjustment
3) Hi8/standard 8 mm AFM 1.7 MHz deviation adjustment
4) Digital8 playback level check
5) Overall level characteristics check
6) Overall distortion check
7) Overall noise level check
8) Overall separation check

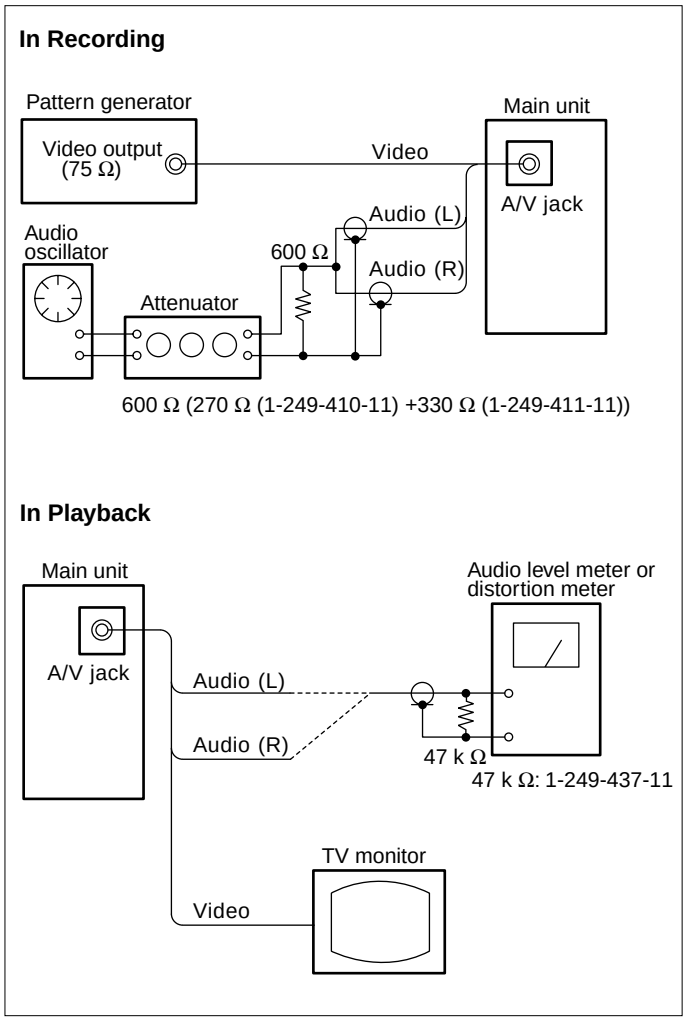

Fig. 5-3-18

1. Hi8/standard 8 mm AFM BPF f_0 Adjustment (VC-235 board)

Sets the BPF passing frequency of IC5701 so that the AFM signal can separate from the playback RF signal properly. If deviated. the mono/stereo mode will be differentiated incorrectly, and noises and distortions will increase during high volume playback.

Mode	Playback
Signal	Hi8/standard 8 mm alignment tape: For BPF adjustment (WR5-11NS (NTSC)) (WR5-11CS (PAL))
Measurement Point	Audio left or right terminal of A/V jack
Measuring Instrument	Distortion meter
Adjustment Page	F
Adjustment Address	7D
Specified Value	The Main and Sub channel distortion rate should be almost the same (within ± 1%) and minimum.

Adjusting method:
1) Select page: 0, address: 01, and set data: 01.
2) Set the Hi-Fi sound switch (menu display) to “2”.
3) Select page: F, address: 7D, change the data and minimize the distortion rate.
4) Press the PAUSE button of the adjustment remote commander.
5) Set the Hi-Fi sound switch (menu display) to “1”.
6) Select page: F, address: 7D, change the data and minimize the distortion rate.
7) Press the PAUSE button of the adjustment remote commander.
8) Repeat steps 2) to 7) and set the data of address: 7D so that the distortions rates when the Hi-Fi sound switch is set to “2” and set to “1” respectively are almost the same and minimum.
9) Press the PAUSE button of the adjustment remote commander.
10) Select page: 0, address: 01, and set data: 00.
11) Set the Hi-Fi sound switch to “STEREO”.

2. Hi8/standard 8 mm AFM 1.5 MHz Deviation Adjustment (VC-235 board)

Adjust to the optimum 1.5 MHz audio FM signal deviation.
If the adjustment is not correct, its playback level will differ from that of other units.

Mode	Playback
Signal	Hi8/standard 8 mm alignment tape: For checking AFM stereo operation Monoscope section (WR5-9NS(NTSC)) (WR5-9CS(PAL))
Measurement Point	Audio left or right terminal of A/V jack
Measuring Instrument	Audio level meter
Adjustment Page	F
Adjustment Address	7B
Specified Value	–7.5 ± 2.0 dBs

Adjusting method:

1) Select page: 0, address: 01, and set data: 01.
2) Set the Hi-Fi sound switch (menu display) to “1”.
3) Select page: F, address: 7B, change the data and set the 400 Hz signal level to the specified value.
4) Press the PAUSE button.
5) Set the Hi-Fi sound switch (menu display) to “STEREO”.
6) Select page: 0, address: 01, and set data: 00.

3. Hi8/standard 8 mm AFM 1.7 MHz Deviation Adjustment (VC-235 board)

Adjust to the optimum 1.7 MHz audio FM signal deviation.
If improper, this causes deteriorated separation (with stereo signal).

Mode	Playback
Signal	Hi8/standard 8 mm alignment tape: For checking AFM stereo operation Monoscope section (WR5-9NS(NTSC)) (WR5-9CS(PAL))
Measurement Point	Audio left or right terminal of A/V jack
Measuring Instrument	Oscilloscope
Adjustment Page	F
Adjustment Address	7C
Specified Value	–7.5 ± 2.0 dBs

Adjusting method:

1) Select page: 0, address: 01, and set data: 01.
2) Set the Hi-Fi sound switch (menu display) to “2”.
3) Select page: F, address: 7C, change the data and set the 1 kHz signal level to the specified value.
4) Press the PAUSE button.
5) Set the Hi-Fi sound switch (menu display) to “STEREO”.
6) Select page: 0, address: 01, and set data: 00.

4. Digital8 Playback Level Check

Mode	VTR playback
Signal	Digital8 alignment tape: For audio operation check (WR5-3ND (NTSC)) (WR5-3CD (PAL))
Measurement Point	Audio left or right terminal of A/V jack
Measuring Instrument	Audio level meter and frequency counter
Specified Value	32 kHz mode: 1 kHz, + 3.0 ± 2.0 dBs 48 kHz mode: 1 kHz, + 3.0 ± 2.0 dBs 44.1 kHz mode: The 7.35 kHz signal level during EMP OFF is +2.0 ± 2.0 dBs. The 7.35 kHz signal level during EMP ON is –6 ± 2 dB from the signal level during EMP OFF.

Checking Method:

1) Check that the playback signal level is the specified value.

5. Overall Level Characteristics Check

Mode	Camera recording and playback
Signal	400 Hz, –66 dBs signal: MIC jack left and right
Measurement Point	Audio left or right terminal of A/V jack
Measuring Instrument	Audio level meter
Specified Value	–7.5 ± 3.0 dBs

Checking Method:

1) Input the 400 Hz, –66 dBs signal in the MIC jack.
2) Record in the camera mode.
3) Playback the recorded section.
4) Check that the 400 Hz signal level is the specified value.

6. Overall Distortion Check

Mode	Camera recording and playback
Signal	400 Hz, –66 dBs signal: MIC jack left and right
Measurement Point	Audio left or right terminal of A/V jack
Measuring Instrument	Audio distortion meter
Specified Value	Below 0.4% (200 Hz to 6 kHz BPF ON)

Checking Method:

1) Input the 400 Hz, –66 dBs signal in the MIC jack.
2) Record in the camera mode.
3) Playback the recorded section.
4) Check that the distortion is the specified value.

7. Overall Noise Level Check

Mode	Camera recording and playback
Signal	No signal: Insert a shorting plug in the MIC jack
Measurement Point	Audio left or right terminal of A/V jack
Measuring Instrument	Audio level meter
Specified Value	Below –45 dBs (IHF-A filter ON, 20 kHz LPF ON)

Checking Method:

1) Insert a shorting plug in the MIC jack.
2) Record in the camera mode.
3) Playback the recorded section.
4) Check that the noise level is the specified value.

8. Overall Separation Check

Mode	Camera recording and playback
Signal	400 Hz, –66 dBs signal: MIC jack <right> [left] (Connect the MIC jack <left> [right] to GND)
Measurement Point	Audio <left> [right] terminal of A/V jack
Measuring Instrument	Audio level meter
Specified Value	Below –40 dBs

< > : Left channel check
[ ] : Right channel check

Checking Method:

1) Input the 400 Hz, –66 dBs signal in the <right> [left] terminal of the MIC jack only.
2) Record in the camera mode.
3) Playback the recorded section.
4) Check that the signal level of the audio output <left> [right] terminal is the specified value.

5-4. SERVICE MODE

4-1. ADJUSTMENT REMOTE COMMANDER

The adjustment remote commander is used for changing the calculation coefficient in signal processing, EVR data, etc. The adjustment remote commander performs bi-directional communication with the unit using the remote commander signal line (LANC). The resultant data of this bi-directional communication is written in the non-volatile memory.

1. Using the Adjustment Remote Commander

1) Connect the adjustment remote commander to the LANC terminal.
2) Set the HOLD switch of the adjustment remote commander to "HOLD" (SERVICE position). If it has been properly connected, the LCD on the adjustment remote commander will display as shown in Fig. 5-4-1.

Fig. 5-4-1

3) Operate the adjustment remote commander as follows.
   - Changing the page
     The page increases when the EDIT SEARCH+ button is pressed, and decreases when the EDIT SEARCH– button is pressed. There are altogether 16 pages, from 0 to F.

Hexadecimal notation	0 1 2 3 4 5 6 7 8 9 A B C D E F
LCD Display	0 1 2 3 4 5 6 7 8 9 A b c d E F
Decimal notation conversion value	0 1 2 3 4 5 6 7 8 9 10 11 12 13 14 15

   - Changing the address
     The address increases when the FF (►►) button is pressed, and decreases when the REW (◄◄) button is pressed. There are altogether 256 addresses, from 00 to FF.
   - Changing the data (Data setting)
     The data increases when the PLAY (►) button is pressed, and decreases when the STOP (■) button is pressed. There are altogether 256 data, from 00 to FF.
   - Writing the adjustment data
     The PAUSE button must be pressed to write the adjustment data (7, 8, C, D, E, F page) in the nonvolatile memory. (The new adjusting data will not be recorded in the nonvolatile memory if this step is not performed)
4) After completing all adjustments, turn off the main power supply (8.4 V) once.

2. Precautions Upon Using the Adjustment Remote Commander

Mishandling of the adjustment remote commander may erase the correct adjustment data at times. To prevent this, it is recommended that all adjustment data be noted down before beginning adjustments and new adjustment data after each adjustment.

4-2. DATA PROCESS

The calculation of the DDS display and the adjustment remote commander display data (hexadecimal notation) are required for obtaining the adjustment data of some adjustment items. In this case, after converting the hexadecimal notation to decimal notation, calculate and convert the result to hexadecimal notation, and use it as the adjustment data. Indicates the hexadecimal-decimal conversion table.

Hexadecimal-decimal Conversion Table

Upper digit of hexadecimal \ Lower digit of hexadecimal	0	1	2	3	4	5	6	7	8	9	A (A)	B (b)	C (c)	D (d)	E (E)	F (F)
0	0	1	2	3	4	5	6	7	8	9	10	11	12	13	14	15
1	16	17	18	19	20	21	22	23	24	25	26	27	28	29	30	31
2	32	33	34	35	36	37	38	39	40	41	42	43	44	45	46	47
3	48	49	50	51	52	53	54	55	56	57	58	59	60	61	62	63
4	64	65	66	67	68	69	70	71	72	73	74	77	76	77	78	79
5	80	81	82	83	84	85	86	87	88	89	90	91	92	93	94	95
6	96	97	98	99	100	101	102	103	104	105	106	107	108	109	110	111
7	112	113	114	115	116	117	118	119	120	121	122	123	124	125	126	127
8	128	129	130	131	132	133	134	135	136	137	138	139	140	141	142	143
9	144	145	146	147	148	149	150	151	152	153	154	155	156	157	158	159
A (A)	160	161	162	163	164	165	166	167	168	169	170	171	172	173	174	175
① B (b)	176	177	178	179	180	181	182	183	184	185	186	187	188	189	190	191
C (c)	192	193	194	195	196	197	198	199	200	201	202	203	204	205	206	207
D (d)	208	209	210	211	212	213	214	215	216	217	218	219	220	221	222	223
E (E)	224	225	226	227	228	229	230	231	232	233	234	235	236	237	238	239
F (F)	240	241	242	243	244	245	246	247	248	249	250	251	252	253	254	255

② (D (d) column)

Note: The characters shown in the parenthesis ( ) shown the display on the adjustment remote commander.

(Example) If the DDS display or the adjustment remote commander shows BD (bd);
Because the upper digit of the adjustment number is B (b), and the lower digit is D (d), the meeting point "189" of ① and ② in the above table is the corresponding decimal number.

Table 5-4-1

4-3. SERVICE MODE

Additional note on adjustment

Note: After the completion of the all adjustments, cancel the service mode by either of the following ways.

1) After data on page: D and F is restored, unplug the main power supply and remove the coin lithium battery. (In this case, date and time and menu setting have been set by users are canceled. Perform resetting.)
2) After data on page: D and F is restored, select page: 0, address: 01, and return the data to 00. And when data on page: 2 and 3 are changed, return data to the original condition.

1. Setting the Test Mode

Page F	Address 22

Data	Function
80	Normal
81	Test mode Various emergency prohibitions and releases Drum emergency, capstan emergency, loading motor emergency, reel emergency, tape top and end, DEW detection

Page D	Address 10

Data	Function
00	Normal
01	Forced camera power ON
02	Forced VTR power ON
03	Forced camera + VTR power ON

- Before setting the data , select page: 0, address: 01, and set data: 01.
- For page D and F, the data set will be recorded in the non-volatile memory by pressing the PAUSE button of the adjustment remote commander. In this case, take note that the test mode will not be exited even when the main power is turned off (8.4 Vdc).
- After completing adjustments/repairs, be sure to return the data of this address to 00, and press the PAUSE button of the adjustment remote commander. And select page: 0, address: 01, and set data: 00.

2. Emergence Memory Address

2-1. C Page Emergence Memory Address

Page C	Address F4 to FF

Address	Contents
F4	EMG code when first error occurs
F6	Upper: MSW code when shift starts when first error occurs Lower: MSW code when first error occurs
F7	Lower: MSW code to be moved when first error occurs
F8	EMG code when second error occurs
FA	Upper: MSW code when shift starts when second error occurs Lower: MSW code when second error occurs
FB	Lower: MSW code to be moved when second error occurs
FC	EMG code when last error occurs
FE	Upper: MSW code when shift starts when last error occurs Lower: MSW code when last error occurs
FF	Lower: MSW code to be moved when last error occurs

When no error occurs in this unit, data “00” is written in the above addresses (F4 to FF). when first error occurs in the unit, the data corresponding to the error is written in the first emergency address (F4 to F7). In the same way, when the second error occurs, the data corresponding to the error is written in the second emergency address (F8 to FB).
Finally, when the last error occurs, the data corresponding to the error is written in the last emergency address (FC to FF).

Note: After completing adjustments, be sure to initialize the data of addresses F4 to FF to “00”.

Initializing method:

1) Select page: 0, address: 01, and set data: 01.
2) Select page: C, address: F4, set data: 00, and press the PAUSE button.
3) Select address: F5 to FF and set data “00” into them in the same way as address: F4.
4) Select page: 0, address: 01, and set data: 00.

2-2. F Page Emergence Memory Address

Note 1: Emergence of PB mode only.

Page F	Address 10 to 1B

Address	Contents
10	EMG code when first error occurs
12	Upper: MSW code when shift starts when first error occurs Lower: MSW code when first error occurs
13	Lower: MSW code to be moved when first error occurs
14	EMG code when second error occurs
16	Upper: MSW code when shift starts when second error occurs Lower: MSW code when second error occurs
17	Lower: MSW code to be moved when second error occurs
18	EMG code when last error occurs
1A	Upper: MSW code when shift starts when last error occurs Lower: MSW code when last error occurs
1B	Lower: MSW code to be moved when last error occurs

When no error occurs in this unit, data “00” is written in the above addresses (10 to 1B). when first error occurs in the unit, the data corresponding to the error is written in the first emergency address (10 to 13). In the same way, when the second error occurs, the data corresponding to the error is written in the second emergency address (14 to 17).
Finally, when the last error occurs, the data corresponding to the error is written in the last emergency address (18 to 1B).

Note 2: After completing adjustments, be sure to initialize the data of addresses 10 to 1B to “00”.

Initializing method:

1) Select page: 0, address: 01, and set data: 01.
2) Select page: F, address: 10, set data: 00, and press the PAUSE button.
3) Select address: 11 to 1B and set data “00” into them in the same way as in address: 10.
4) Select page: 0, address: 01, and set data: 00.

2-3. EMG Code (Emergency Code)

Codes corresponding to the errors which occur are written in C page, addresses F4, F8 and FC (or F page, addresses 10, 14 and 18). The type of error indicated by the code are shown in the following table.

Code	Emergency Type
00	No error
10	Loading motor emergency during loading
11	Loading motor emergency during unloading
22	T reel emergency during normal rotation
23	S reel emergency during normal rotation
24	T reel emergency (Short circuit between S reel terminal and T reel terminal)
30	FG emergency at the start up of the capstan
40	FG emergency at the start up of the drum
42	FG emergency during normal rotation of the drum

2-4. MSW Code

- The lower parts of the data of C page, addresses F6, FA and FE (or F page, addresses 12, 16 and 1A) represent the MSW codes (mode switch mechanism position) when errors occurs.
- The upper parts of the data of C page, addresses F6, FA and FE (or F page, addresses 12, 16 and 1A) represent, when the mechanism position is to be moved, the MSW codes at the start movement (when moving the loading motor).
- The lower parts of the data of C page, addresses F7, FB and FF (or F page, addresses 13, 17 and 1B) represent the MSW codes of the desired movement when the mechanism position is to be moved.

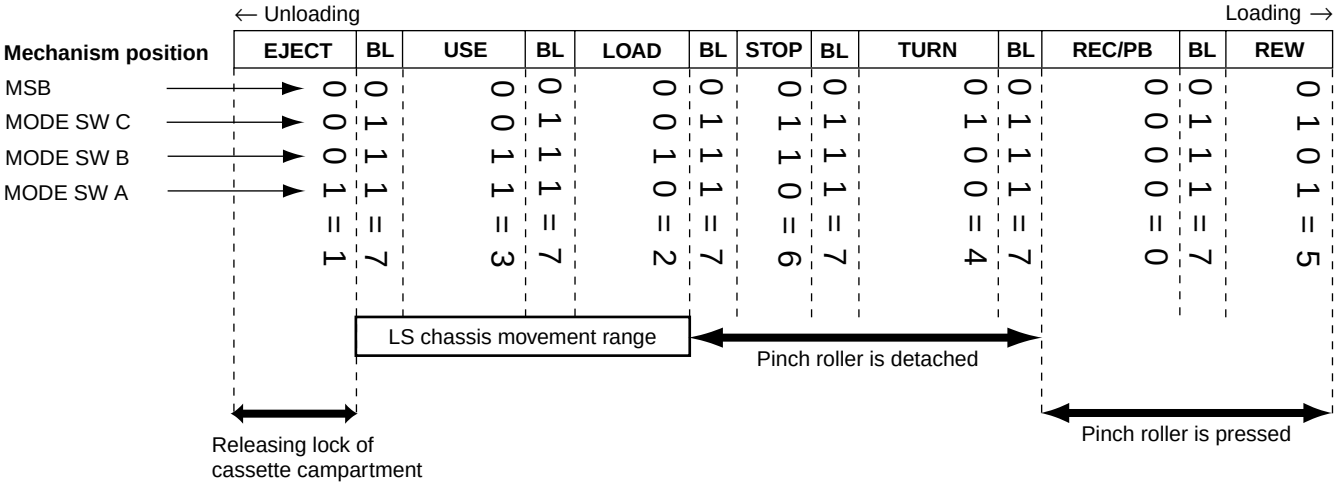

Mechanism Position	MSW Code	Contents
EJECT	1	Position at which the cassette compartment lock is released. The mechanism will not move any further in the unloading direction.
BL	7	BLANC code. Between two codes. The mechanism will not be stopped by this code while it is operating.
USE	3	EJECT completion position. When the cassette is ejected, the mechanism will stop at this position.
LOAD	2	Code during loading/unloading. Code that is used while the LS chassis is moving.
STOP	6	Normal stop position. The pinch roller separates, the tension regulator returns, and the brakes of both reels turn on.
TURN	4	Position at which is used when the pendulum gear swings from S to T or from T to S.
REC/PB	0	PB, REC, CUE, REV, PAUSE, FF positions. The pinch roller is pressed and tension regulator is on.
REW	5	REW position. REW are carried at this position. The mechanism will not move any further in the loading direction.

3. Bit Value Discrimination

Bit values must be discriminated using the display data of the adjustment remote commander for the following items. Us the table below to discriminate if the bit value is “1” or “0”.

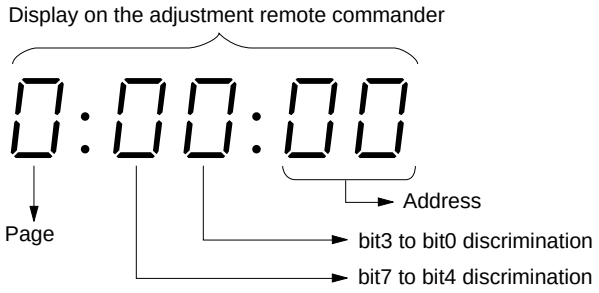

(Example) If the remote commander display is “8E”, bit value from bit 7 to bit 4 can be discriminated from the column Ⓐ, and those from bit 3 to bit 0 from column Ⓑ.

	Display on the adjustment remote commander	Bit values			
		bit3 or bit7	bit2 or bit6	bit1 or bit5	bit0 or bit4
	0	0	0	0	0
	1	0	0	0	1
	2	0	0	1	0
	3	0	0	1	1
	4	0	1	0	0
	5	0	1	0	1
	6	0	1	1	0
	7	0	1	1	1
Ⓐ	8	1	0	0	0
	9	1	0	0	1
	A (A)	1	0	1	0
	B (b)	1	0	1	1
	C (C)	1	1	0	0
	D (d)	1	1	0	1
Ⓑ	E (E)	1	1	1	0
	F (F)	1	1	1	1

4. Input/output Check

Page 2	Address 49

Bit	Function	When bit value = 1	When bit value = 0
0			
1			
2			
3			
4	MIC jack	MIC jack is used	
5			
6	AUDIO/VIDEO jack	AUDIO/VIDEO jack is used	
7	S VIDEO jack		S VIDEO jack is used

Using method:

1) Select page: 2, address: 49.
2) By discriminating the bit value of display data, the state of the jack can be discriminated.

5. LED, LCD (Display Window) Check

Page 2	Address 05	Bit5

Using method:

1) Select page: 2, address: 05, and set the bit value of Bit5 to “1”.
2) Check that all LED are lit and all segments of LCD (display window) are lit.
3) Select page: 2, address: 05, and set the bit value of Bit5 to “0”.

6. Record of Use Check

Page 2	Address A2 to AA

Bit	Function		Remarks
A2	Drum rotation	Hour (H)	1000th place digit and 100th place digit of counted time (decimal digit)
A3	counted time	Hour (L)	10th place digit and 1st place digit of counted time (decimal digit)
A4	(BCD code)	Minute	
A5	User initial power	Year	After setting the clock, set the date of power on next
A6	on date	Month	
A7	(BCD code)	Day	
A8	Final condensation	Year	
A9	occurrence date	Month	
AA	(BCD code)	Day	

Using method:

1) The record of use data is displayed at page: 2, addresses: A2 to AA.

Note 1: This data will be erased when the coin lithium battery (CF-69/71 board BH001) is removed (reset).

Note 2:

CF-69 board	TRV model
CF-71 board	TR model

TRV model: DCR-TRV120/TRV120E/TRV120P/TRV125E
TR model: DCR-TR8000E/TR8100E

Note 3: When the drum was replaced, initialize the drum rotation counted time.

Initializing method of drum rotation counted time:

1) Select page: 0, address: 01, and set data: 01.
2) Select page: 2, address: A2, set data: 00, and press the PAUSE button.
3) Select address: A3 and A4 and set data “00” into them in the same way as in address: A2.
4) Select page: 0, address: 01, and set data: 00.

7. Switch Check (1)

Page 2	Address 43

Bit	Function	When bit value = 1	When bit value = 0
0	VTR MODE SW (SS-10000 block S001)	OFF	ON
1	CAM MODE SW (SS-10000 block S001)	OFF	ON
2	START/STOP SW (SS-10000 block S002)	OFF	ON
3	EJECT SW (FK-10000 block S012)	OFF	ON
4	CC DOWN SW (Mechanism chassis)	OFF (UP)	ON (DOWN)
5	PHOTO FREEEZE SW (FK-10000 block S013)	OFF	ON
6			
7			

Using method:

1) Select page: 2, address: 43.
2) By discriminating the bit value of display data, the state of the switches can be discriminated.

8. Switch Check (2)

Page 2	Address 60 to 66

Using method:

1) Select page: 2, address: 60 to 66.
2) By discriminating the display data, the pressed key can be discriminated.

Address	Data							
	00 to 0C	0D to 24	25 to 3F	40 to 5D	5E to 81	82 to AA	AB to D7	D8 to FF
60 (KEY AD0) IC4801 ⑬	LASER AV LINK (FK-10000 block (S001)	STOP (FK-10000 block (S002)	FF (FK-10000 block (S003)	REC (FK-10000 block (S004, 005)	EDIT SEARCH (+) (FK-10000 block (S006)	EDIT SEARCH (–) (FK-10000 block (S007)		No key input
61 (KEY AD1) IC4801 ⑭	PHOTO START (FK-10000 block (S014)	PAUSE (FK-10000 block (S009)	REW (FK-10000 block (S010)	PLAY (FK-10000 block (S011)				No key input
62 (KEY AD2) IC4801 ⑮	DIGITAL EFFECT (CF-69 board) (S001) (CF-71 board) (S001)	PICTURE EFFECT (CF-69 board) (S003) (CF-71 board) (S002)	MENU (CF-69 board) (S007) (CF-71 board) (S005)	TITLE (CF-69 board) (S010) (CF-71 board) (S006)	PB ZOOM (CF-69 board) (S014) (CF-71 board) (S008)			No key input
63 (KEY AD3) IC4801 ⑯							PANEL COLSE (PANEL OPEN/ CLOSE SWITCH) (S008)	PANEL OPEN (PANELOPEN/ CLOSE SWITCH) (S008)
64 (KEY AD4) IC4801 ⑰	SUPER NIGHTSHOT (MF-10000 block (S002)	DATA CODE (CF-69 board) (S005) (CF-71 board) (S003)	END SEARCH (CF-69 board) (S009)		DISPLAY (CF-69 board) (S016)	FOCUS INFINTY (MF-10000 block (S001)	FOCUS AUTO (MF-10000 block (S001)	FOCUS MANUAL (MF-10000 block (S001)
65 (KEY AD5) IC4801 ⑱			EXEC (CF-69 board) (S006) (CF-71 board) (S004)	EXPOSURE (CF-69 board) (S013) (CF-71 board) (S007)	PROGRAM AE (CF-69 board) (S017) (CF-71 board) (S009)	BACK LIGHT (CF-69 board) (S019) (CF-71 board) (S010)	FADER (CF-69 board) (S020) (CF-71 board) (S011)	No key input
66 (KEY AD6) IC4801 ⑲		LCD BRIGHT (+) (PD-117 board (S5701)	LCD BRIGHT (–) (PD-117 board (S5702)	VOLUME (+) (PD-117 board (S5703)	VOLUME (–) (PD-117 board (S5704)	PANEL REVERSE (PR-10000 block (S001)		PANEL NORMAL (PR-10000 block (S001)

Note:

CF-69 board	PD-117 board	TRV model
CF-71 board	—	TR model

TRV model: DCR-TRV120/TRV120E/TRV120P/TRV125E
TR model: DCR-TR8000E/TR8100E

9. Headphone Jack Check

Page 3	Address 5A

Bit	Function	When bit value = 1	When bit value = 0
2	Headphone jack	Headphone jack is used	

Using method:

1) Select page: 3, address: 5A.
2) By discriminating the bit value of display data, the state of the headphone jack can be discriminated.

6-1. EXPLODED VIEWS

NOTE:
- -XX and -X mean standardized parts, so they may have some difference from the original one.
- Color Indication of Appearance Parts
  Example:
  KNOB, BALANCE (WHITE) . . . (RED)
  ↑ ↑
  Parts Color Cabinet's Color
- Items marked "*" are not stocked since they are seldom required for routine service. Some delay should be anticipated when ordering these items.
- The mechanical parts with no reference number in the exploded views are not supplied.
- Accessories are given in the last of the electrical parts list.

The components identified by mark ⚠ or dotted line with mark ⚠ are critical for safety.
Replace only with part number specified.

Les composants identifiés par une marque ⚠ sont critiquens pour la sécurité.
Ne les remplacer que par une pièce portant le numéro spécifié.

- Abbreviation
  AR : Argentina model
  AUS : Australian model
  BR : Brazilian model
  CN : Chinese model
  CND : Canadian model
  EE : East European model
  HK : Hong Kong model
  JE : Tourist model
  KR : Korea model
  NE : North European model
  RU : Russian model

6-1-1. FRONT PANEL SECTION

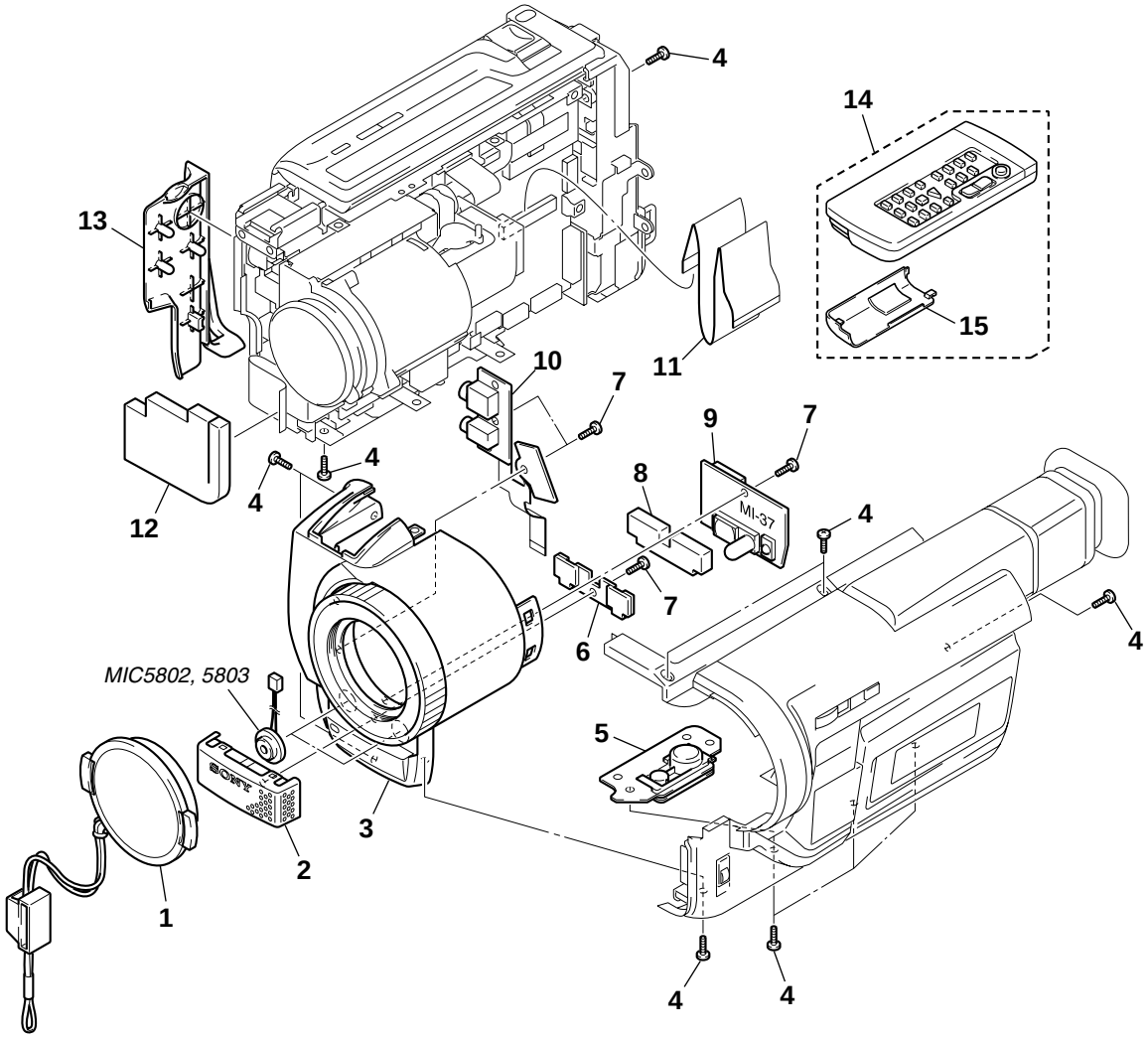

Ref. No.	Part No.	Description	Remark
1	X-3949-376-1	CAP (N) ASSY, LENS	
2	X-3950-220-1	GRILLE (2.5) ASSY, MICROPHONE	
3	X-3950-217-1	PANEL (2.5) ASSY, F (TRV120/TRV120E: E, HK, AUS, CN, JE/TRV120P)	
3	X-3950-218-1	PANEL (2.5) ASSY, F (TRV120E: AEP, UK, EE, NE, RU, /TR8000E)	
3	X-3950-254-1	PANEL (2.5) ASSY, F (TRV125E/TR8100E)	
4	3-968-729-01	SCREW (2X4)	
5	3-987-717-01	SCREW (TRIPOD)	
6	X-3950-221-1	RETAINER ASSY, MICROPHONE	
7	3-948-339-61	TAPPING	
* 8	3-059-031-01	CUSHION (MI)	
9	A-7074-267-A	MI-37 BOARD, COMPLETE (TRV120/TRV120P)	
9	A-7074-277-A	MI-37 BOARD, COMPLETE (TRV120E/TRV125E/TR8000E/TR8100E)	
10	1-676-818-31	FP-156 FLEXIBLE BOARD	
11	1-790-334-11	CABLE, FLEXIBLE FLAT (FFC-257S)	
* 12	3-059-032-01	CUSHION (SE)	
13	3-058-723-01	COVER, JACK	
14	1-475-141-61	COMMANDER, REMOTE (RMT-814)	
15	3-742-854-01	LID, BATTERY (for RMT-814)	
MIC5802	1-542-312-11	MICROPHONE (L)	
MIC5803	1-542-312-11	MICROPHONE (R)	

6-1-2. CABINET (R) SECTION (TRV120/TRV120E/TRV120P/TRV125E)

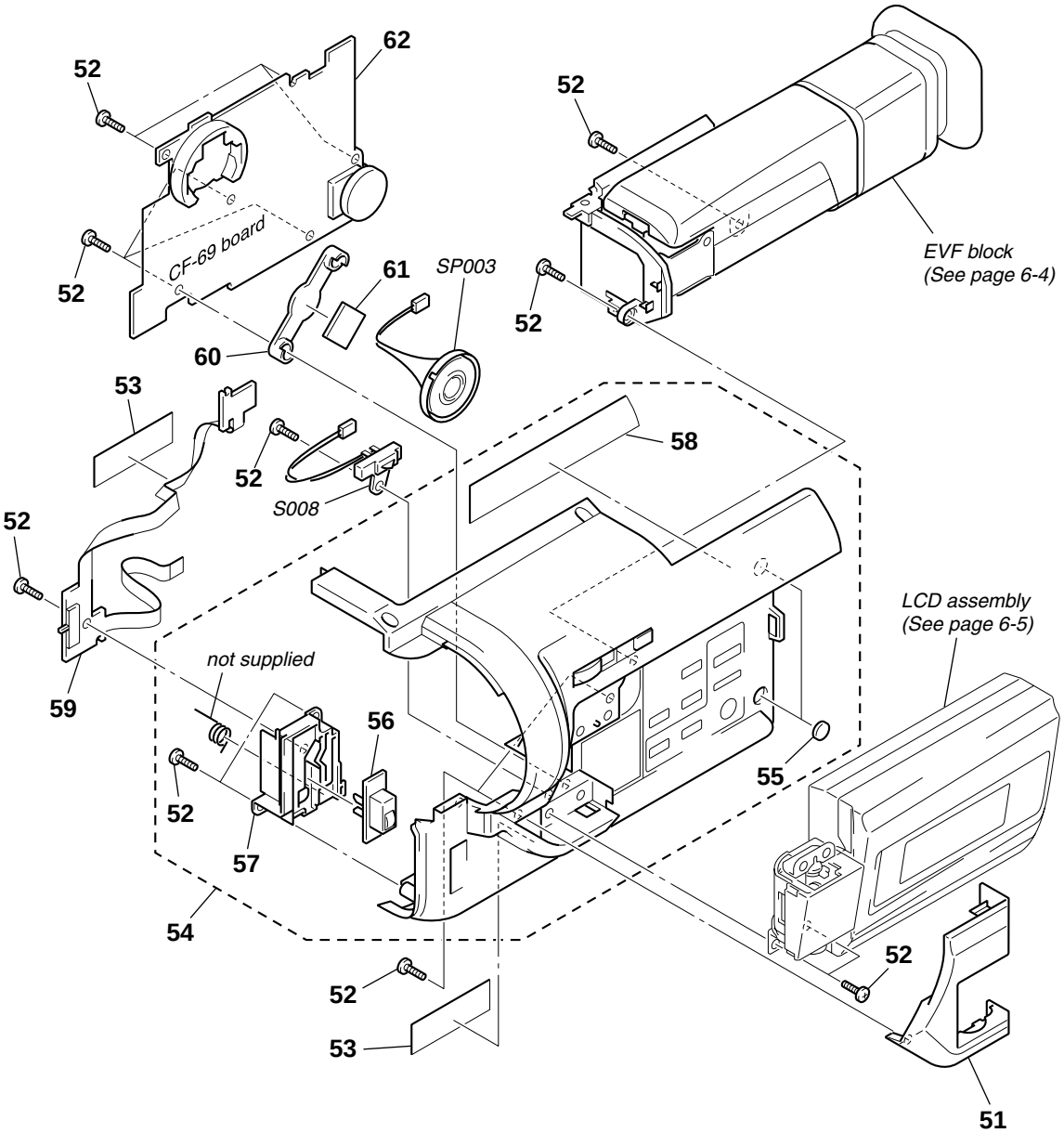

Ref. No.	Part No.	Description	Remark
51	3-058-670-01	COVER (R) (101), HINGE (TRV120/TRV120P)	
51	3-058-670-11	COVER (R) (101), HINGE (TRV120E/TRV125E)	
52	3-948-339-61	TAPPING	
53	3-941-343-21	TAPE (A)	
54	X-3950-235-1	CABINET (R) (101) ASSY	
55	3-959-978-02	CUSHION, PANEL	
56	3-058-698-01	KNOB (100), MF	
57	3-058-697-01	RETAINER (100), MF	
* 58	3-059-650-01	BLIND (B) (101), VF	
59	1-418-801-11	SWITCH BLOCK, CONTROL (MF-10000)	
* 60	3-058-659-01	RETAINER (101), SPEAKER	
* 61	3-058-658-01	SPACER (101), SPEAKER	
62	A-7074-268-A	CF-69 BOARD, COMPLETE	
S008	1-771-848-11	SWITCH, PUSH (PANEL OPEN/CLOSE)	
SP003	1-529-590-11	SPEAKER (2.0cm)	

6-1-3. CABINET (R) SECTION (TR8000E/TR8100E)

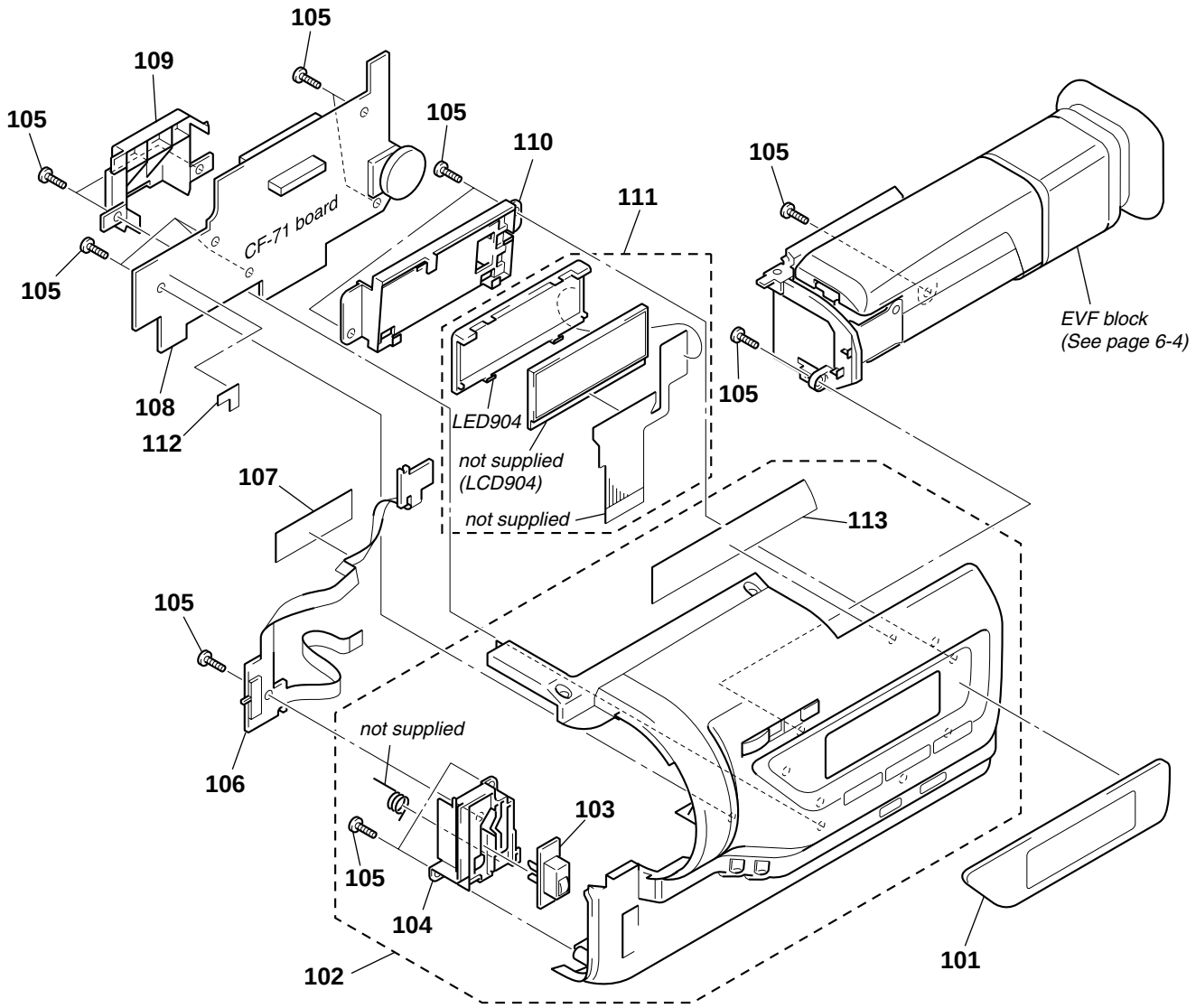

The components identified by mark ⚠ or dotted line with mark ⚠ are critical for safety. Replace only with part number specified.	Les composants identifiés par une marque ⚠ sont critiques pour la sécurité. Ne les remplacer que par une pièce portant le numéro spécifié.

Ref. No.	Part No.	Description	Remark
101	3-058-700-01	WINDOW (100), LCD	
102	X-3950-238-1	CABINET (R) (100) ASSY	
103	3-058-698-01	KNOB (100), MF	
104	3-058-697-01	RETAINER (100), MF	
105	3-948-339-61	TAPPING	
106	1-418-801-11	SWITCH BLOCK, CONTROL (MF-10000)	
107	3-941-343-21	TAPE (A)	
108	A-7074-284-A	CF-71 BOARD, COMPLETE	
109	3-053-717-11	RETAINER, LITHIUM BATTERY	
110	3-058-699-01	HOLDER (100), LCD	
111	A-7094-826-A	INDICATION (LCD) BLOCK ASSY (SERVICE)	
* 112	3-058-900-01	SHEET (100), MUFFLE	
* 113	3-059-649-01	BLIND (B) (100), VF	
⚠LED904	1-517-866-11	LIGHT, BACK	

6-1-4. EVF BLOCK SECTION

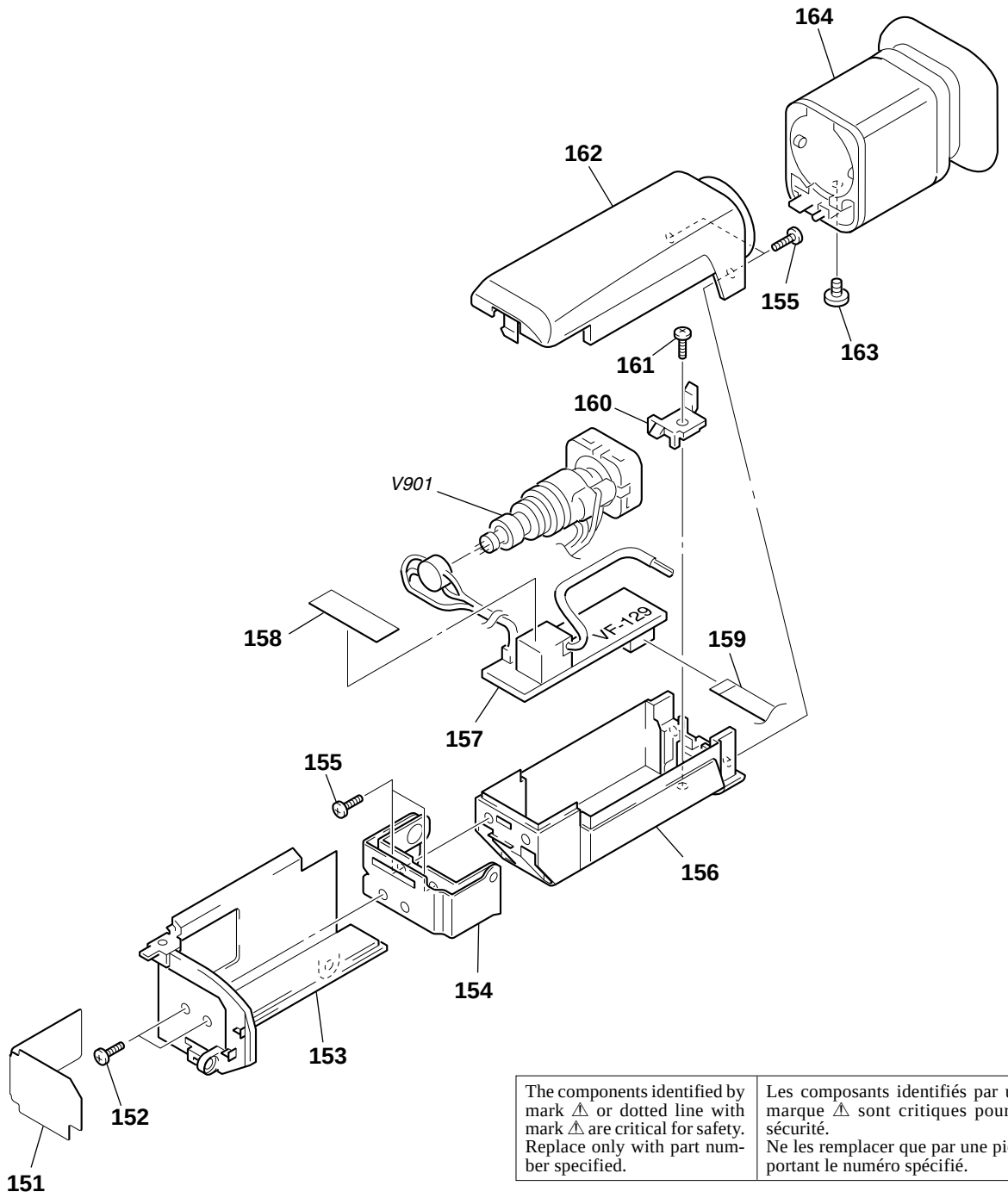

The components identified by mark ⚠ or dotted line with mark ⚠ are critical for safety. Replace only with part number specified.	Les composants identifiés par une marque ⚠ sont critiques pour la sécurité. Ne les remplacer que par une pièce portant le numéro spécifié.

Ref. No.	Part No.	Description	Remark
* 151	3-058-641-01	GUIDE (100), HARNESS	
152	3-968-729-01	SCREW (2X4)	
153	X-3950-234-1	BASE (B) (100) ASSY, VF	
154	X-3950-230-1	HINGE ASSY, VF	
155	3-948-339-81	TAPPING	
156	3-058-644-01	CABINET (LOWER) (B) (100), EVF	
157	A-7073-838-A	VF-129 BOARD, COMPLETE (TRV120/TRV120P)	
157	A-7073-855-A	VF-129 BOARD, COMPLETE (TRV120E/TRV125E/TR8000E/TR8100E)	
158	3-941-343-21	TAPE (A)	
159	1-792-454-11	CABLE, FLEXIBLE FLAT (FFC-289)	
160	3-053-681-01	TALLY, EVF	
161	3-948-339-61	TAPPING	
162	X-3950-233-1	CABINET (UPPER) (B) (100) ASSY, EVF	
163	3-975-898-01	SCREW (T), F LOCK	
164	X-3949-329-1	FINDER (S) ASSY	
⚠V901	1-452-673-61	CRT ASSY (M01KXX90WB)	

6-1-5. LCD ASSEMBLY SECTION (TRV120/TRV120E/TRV120P/TRV125E)

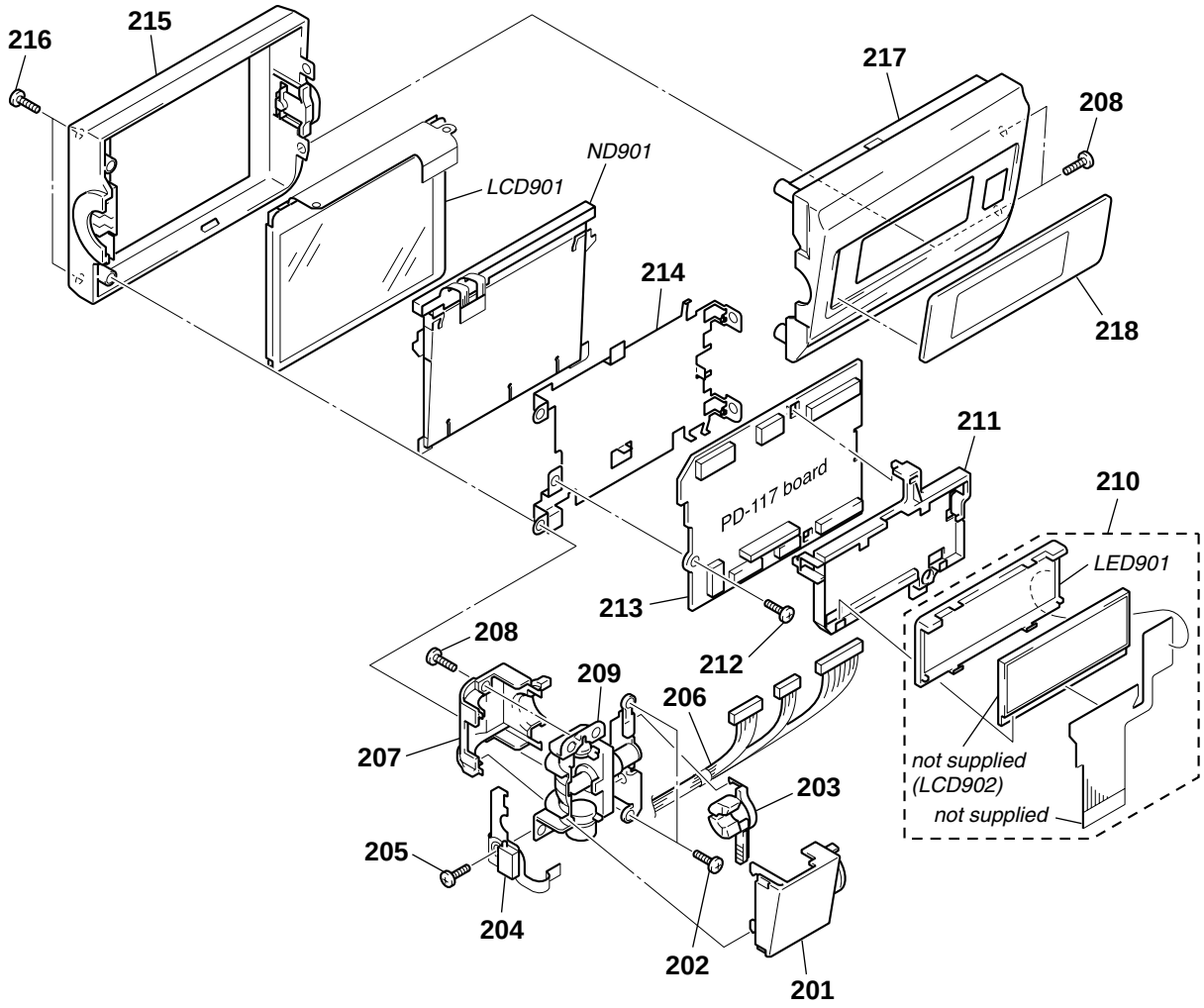

The components identified by mark ⚠ or dotted line with mark ⚠ are critical for safety. Replace only with part number specified.	Les composants identifiés par une marque ⚠ sont critiques pour la sécurité. Ne les remplacer que par une pièce portant le numéro spécifié.

Ref. No.	Part No.	Description	Ref. page No.
201	3-058-671-01	COVER (C) (101), HINGE	
202	3-948-339-31	SCREW, TAPPING	
* 203	3-058-672-01	CLAMP, HARNESS	
204	1-418-802-11	SWITCH BLOCK, CONTROL (PR-10000)	
205	4-981-286-01	SCREW (M1.7X2) (IB LOCK)	
206	1-960-225-11	HARNESS (DP-83)	
207	3-058-673-01	COVER (M), HINGE	
208	3-968-729-01	SCREW (2X4)	
209	X-3950-237-1	HINGE ASSY	
210	A-7094-826-A	INDICATION (LCD) BLOCK ASSY (SERVICE)	
211	3-058-667-01	HOLDER (101), LCD	
212	3-713-786-21	SCREW (M2X3)	
213	A-7074-272-A	PD-117 (TYPE S 61K) BOARD, COMPLETE (TRV120/TRV120P)	
213	A-7074-280-A	PD-117 (TYPE S 123K) BOARD, COMPLETE (TRV120E: AEP, UK, EE, NE, RU/TRV125E)	
213	A-7074-290-A	PD-117 (TYPE C) BOARD, COMPLETE (TRV120E: E, HK, AUS, CN, JE)	
214	3-058-666-01	FRAME (101), PANEL	
215	X-3950-236-1	CABINET (M) (101) ASSY, P	
216	3-948-339-81	TAPPING	
217	3-058-665-01	CABINET (C) (101), P	
218	3-058-668-01	WINDOW (101), LCD (TRV120/TRV120P)	
218	3-058-668-11	WINDOW (101), LCD (TRV120E)	
218	3-058-668-21	WINDOW (101), LCD (TRV125E)	
LCD901	1-803-852-21	INDICATOR MODULE LIQUID CRYSTAL (TYPE S 61K) (TRV120/TRV120P)	
LCD901	1-803-853-21	INDICATOR MODULE LIQUID CRYSTAL (TYPE S 123K) (TRV120E: AEP, UK, EE, NE, RU/TRV125E)	
LCD901	1-803-859-31	INDICATOR MODULE LIQUID CRYSTAL (TYPE C) (TRV120E: E, HK, AUS, CN, JE)	
⚠LED901	1-517-866-11	LIGHT, BACK	
⚠ND901	1-517-751-11	TUBE, FLUORESCENT, COLD CATHODE (TRV120/TRV120E: E, HK, AUS, CN, JE/ TRV120P)	
⚠ND901	1-517-751-21	TUBE, FLUORESCENT, COLD CATHODE (TRV120E: AEP, UK, EE, NE, RU/TRV125E)	

6-1-6. CABINET (L) SECTION

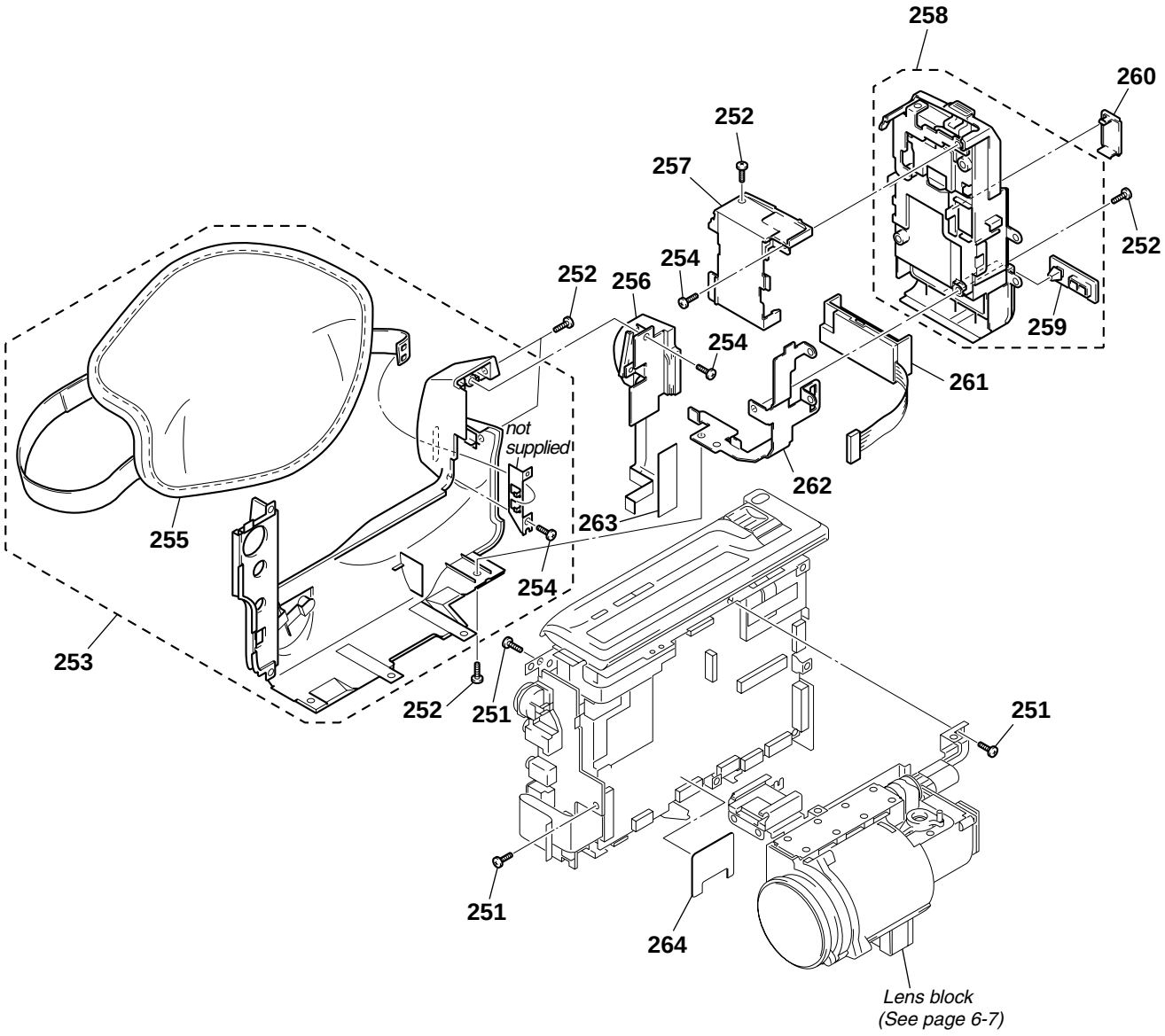

Ref. No.	Part No.	Description	Ref. page No.
251	3-713-786-21	SCREW (M2X3)	
252	3-968-729-01	SCREW (2X4)	
253	X-3950-223-1	CABINET (L) ASSY (TRV120/TRV120E: E, HK, AUS, CN, JE/TRV120P)	
253	X-3950-279-1	CABINET (L) ASSY (TRV120E: AEP, UK, EE, NE, RU/TRV125E/TR8000E/TR8100E)	
254	3-948-339-61	TAPPING	
255	3-052-815-01	BELT (ES), GRIP	
256	1-418-800-21	SWITCH BLOCK, CONTROL (SS-10000) (TRV120/TRV120E: E, HK, AUS, CN, JE/TRV120P)	
256	1-418-800-41	SWITCH BLOCK, CONTROL (SS-10000) (TRV120E: AEP, UK, EE, NE, RU/TRV125E/TR8000E/TR8100E)	
257	3-058-625-01	CABINET, MS	
258	X-3950-222-1	PANEL ASSY, BATTERY (EXCEPT TRV120: BR)	
258	X-3950-496-1	PANEL ASSY, BATTERY (TRV120: BR)	
259	3-987-656-01	LID, JACK	
260	3-975-752-01	LID (BT), CPC	
261	1-694-384-11	TERMINAL BOARD, BATTERY	
262	3-058-619-01	SHEET METAL (LOWER), STRAP	
263	3-941-343-21	TAPE (A)	
* 264	3-059-461-01	SHEET, RP SHIELD	

6-1-7. LENS BLOCK SECTION

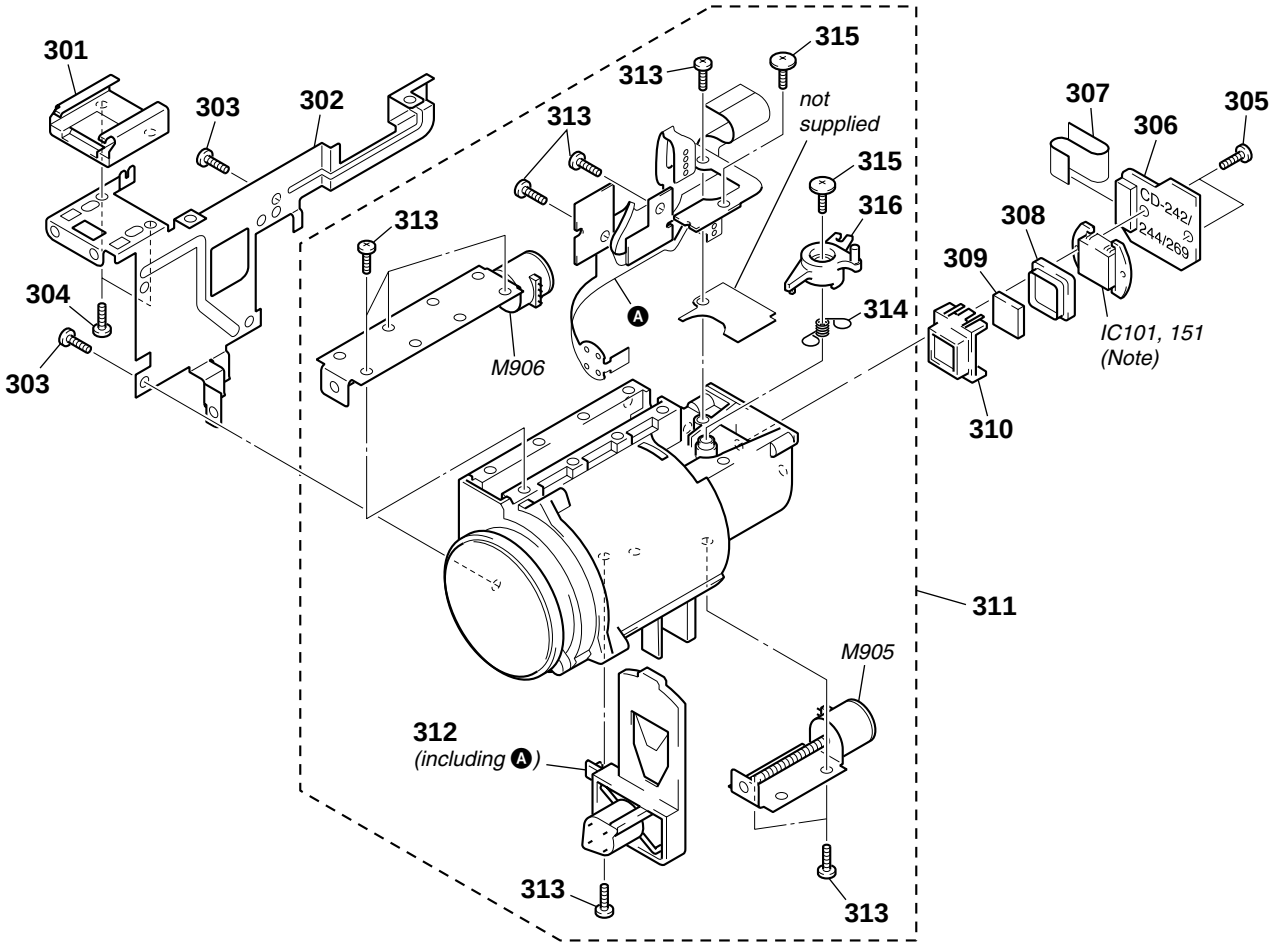

(Note) Be sure to read “Precuations for Replcement of CCD Imager” on page 4-8, 4-10 when changing the CCD imager

Ref. No.	Part No.	Description	Ref. page No.
301	1-793-996-11	CONNECTOR, EXTERNAL	
302	3-058-595-01	FRAME, LENS	
303	3-948-339-61	TAPPING	
304	3-989-735-01	SCREW (M1.7), LOCK ACE, P2	
305	3-318-203-11	SCREW (B1.7X6), TAPPING	
306	A-7074-270-A	CD-242 BOARD, COMPLETE (TRV120/TRV120P)	
306	A-7074-279-A	CD-244 BOARD, COMPLETE (TRV120E/TRV125E)	
306	A-7074-286-A	CD-269 BOARD, COMPLETE (TR8000E/TR8100E)	
307	1-676-822-11	FP-161 FLEXIBLE BOARD	
308	3-968-054-11	RUBBER (FM), SHIELD	
309	1-758-155-21	FILTER BLOCK, OPTICAL (TRV120E/TRV125E/TR8000E/TR8100E)	
309	1-758-216-21	FILTER BLOCK, OPTICAL (TRV120/TRV120P)	
310	3-978-981-11	ADAPTOR (FK), CCD FITTING	
311	8-848-736-01	DEVICE, LENS LSV-680A	
312	1-758-445-11	IRIS IR-680 (including FLEXIBLE BOARD)	
313	3-713-791-41	TAPPING (B1.7X5)	
314	3-059-508-01	SPRING, RETAIN	
315	3-056-022-01	TAPPING (B1.7X3.5)	
316	3-059-501-01	LEVER, IR	
IC101	A-7030-821-A	CCD BLOCK ASSY (CCD IMAGER) (TRV120/TRV120P) (Note)	
IC151	A-7031-072-A	CCD BLOCK ASSY (CCD IMAGER) (TRV120E/TRV125E/TR8000E/TR8100E) (Note)	
M905	1-763-472-11	MOTOR, STEPPING (F680) (FOCUS)	
M906	1-763-471-11	MOTOR, STEPPING (Z680) (ZOOM)	

6-1-8. MAIN BOARD SECTION

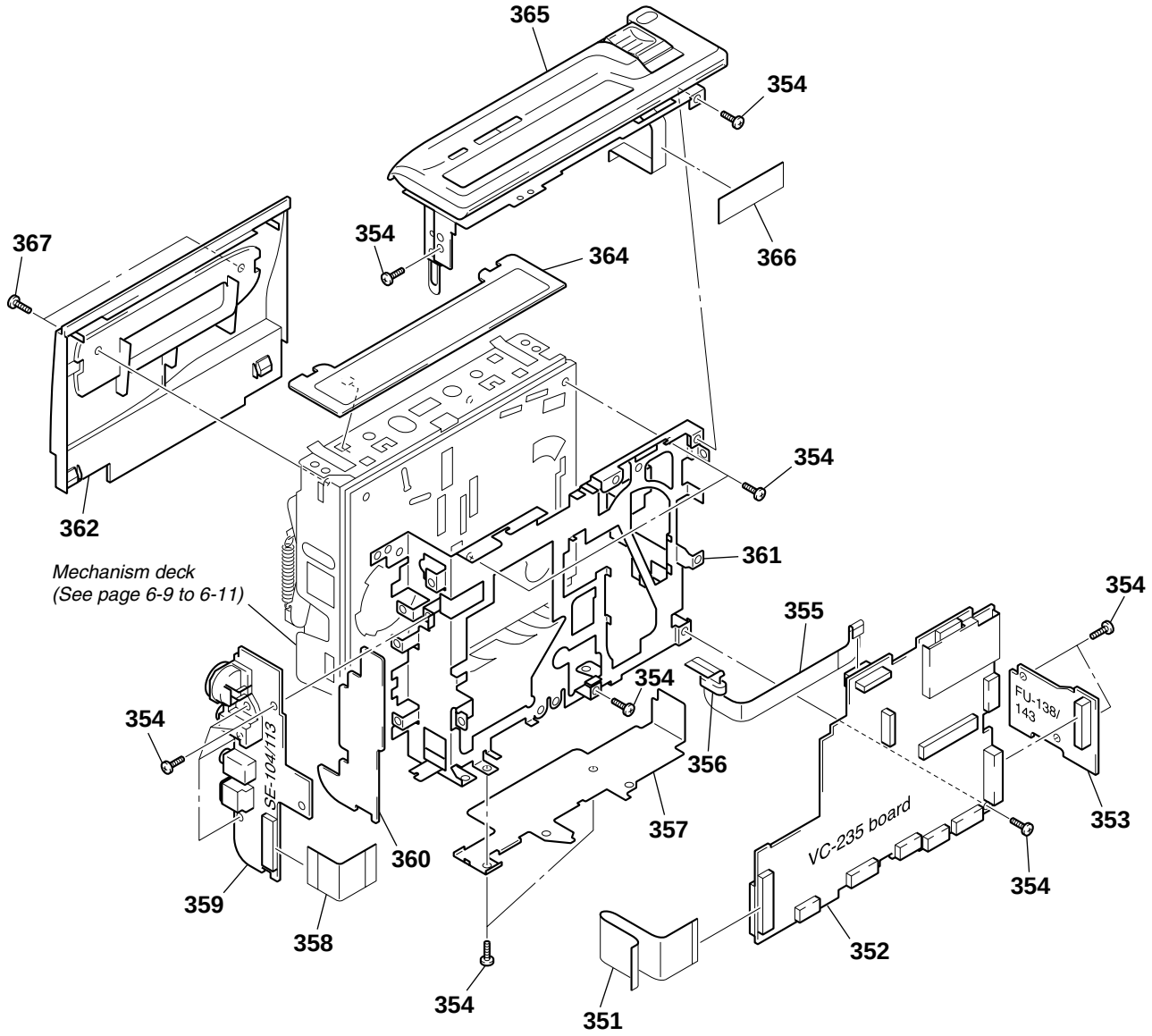

Ref. No.	Part No.	Description	Ref. page No.
351	1-676-819-11	FP-157 FLEXIBLE BOARD	
352	A-7094-782-A	VC-235 BOARD, COMPLETE (SERVICE)	(TRV120/TRV120P)
352	A-7094-783-A	VC-235 BOARD, COMPLETE (SERVICE)	(TRV120E/TRV125E)
352	A-7094-784-A	VC-235 BOARD, COMPLETE (SERVICE)	(TR8000E/TR8100E)
353	A-7074-271-A	FU-138 BOARD, COMPLETE	(TRV120/TRV120E/TRV120P/TRV125E)
353	A-7074-287-A	FU-143 BOARD, COMPLETE	(TR8000E/TR8100E)
354	3-713-786-21	SCREW (M2X3)	
355	1-676-821-11	FP-160 FLEXIBLE BOARD	
356	1-500-226-31	BEAD, FERRITE	
357	3-058-594-01	FRAME (B), MD	
358	1-676-820-11	FP-159 FLEXIBLE BOARD	
359	A-7074-269-A	SE-104 BOARD, COMPLETE	(TRV120/TRV120P)
359	A-7074-278-A	SE-104 BOARD, COMPLETE	(TRV120E/TRV125E)
359	A-7074-285-A	SE-113 BOARD, COMPLETE	(TR8000E/TR8100E)
* 360	3-060-001-01	SHEET, MD	
361	3-058-593-01	FRAME (A), MD	
362	X-3950-224-1	LID ASSY, CASSETTE	
364	X-3950-697-1	LID ASSY, LS	
365	1-418-799-41	SWITCH BLOCK, CONTROL (FK-10000)	(TRV120/TRV120E: E, HK, AUS, CN, JE/ TRV120P)
365	1-418-799-51	SWITCH BLOCK, CONTROL (FK-10000)	(TRV120E: AEP, UK, EE, NE, RU/TRV125E/ TR8000E/TR8100E)
366	3-941-343-21	TAPE (A)	
367	3-968-729-01	SCREW (2X4)	

6-1-9. CASSETTE COMPARTMENT ASSEMBLY

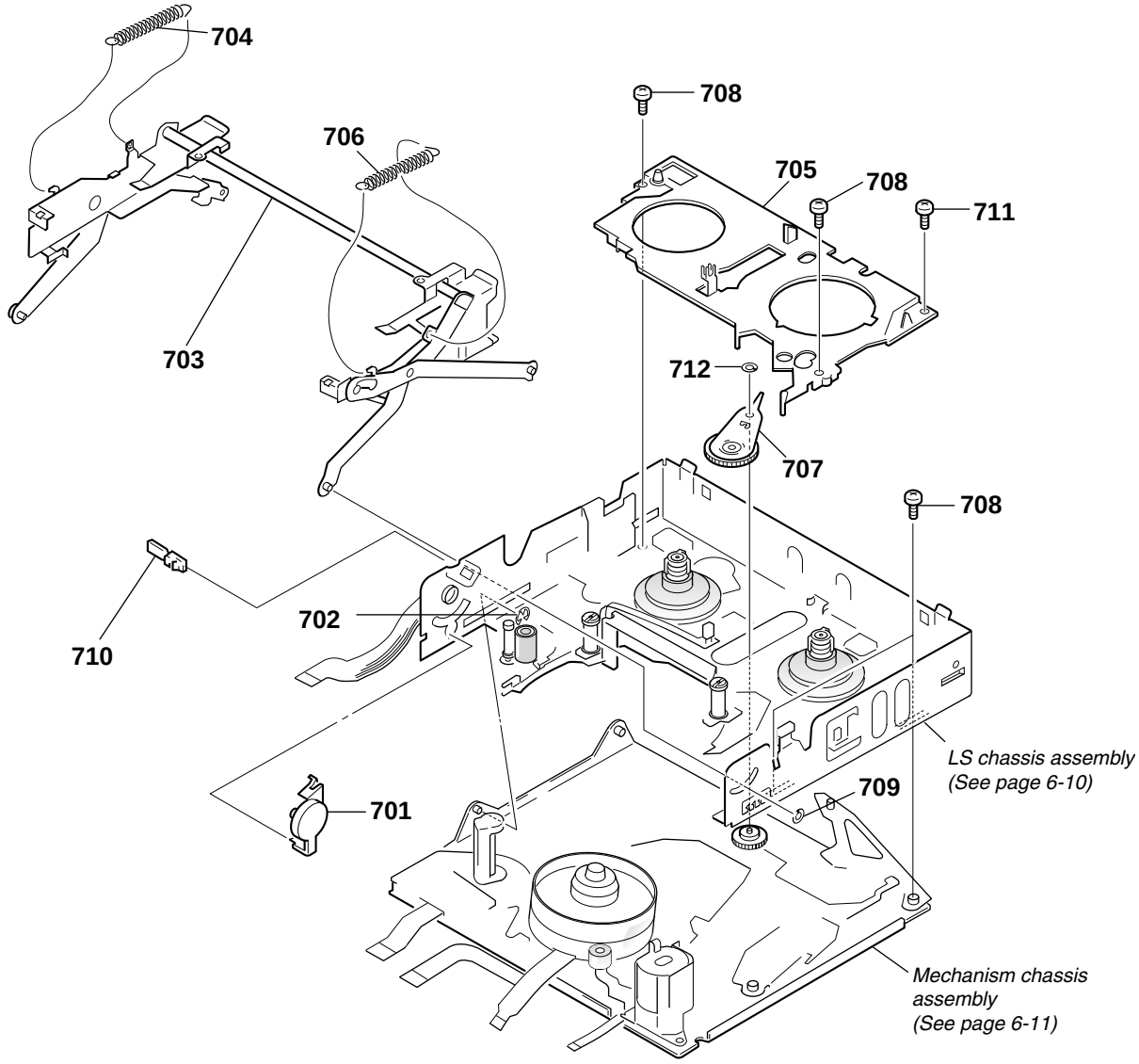

Ref. No.	Part No.	Description	Ref. page No.
701	A-7040-421-A	DAMPER ASSY	
702	7-624-102-04	STOP RING 1.5, TYPE -E	
703	X-3949-153-2	CASSETTE COMPARTMENT ASSY	
704	3-965-587-03	SPRING (POWER TENSION), TENSION	
705	3-989-479-01	RETAINER (2), GOOSENECK	
706	3-973-268-01	SPRING (POWER TENSION), TENSION	
707	X-3945-399-1	GEAR ASSY, GOOSENECK	
708	3-947-503-01	SCREW (M1.4)	
709	3-979-686-01	WASHER, STOPPER	
710	3-971-076-01	FASTENER, D	
711	3-976-055-01	SCREW (M1.4X1)	
712	3-331-007-21	WASHER	

6-1-10. LS CHASSIS ASSEMBLY

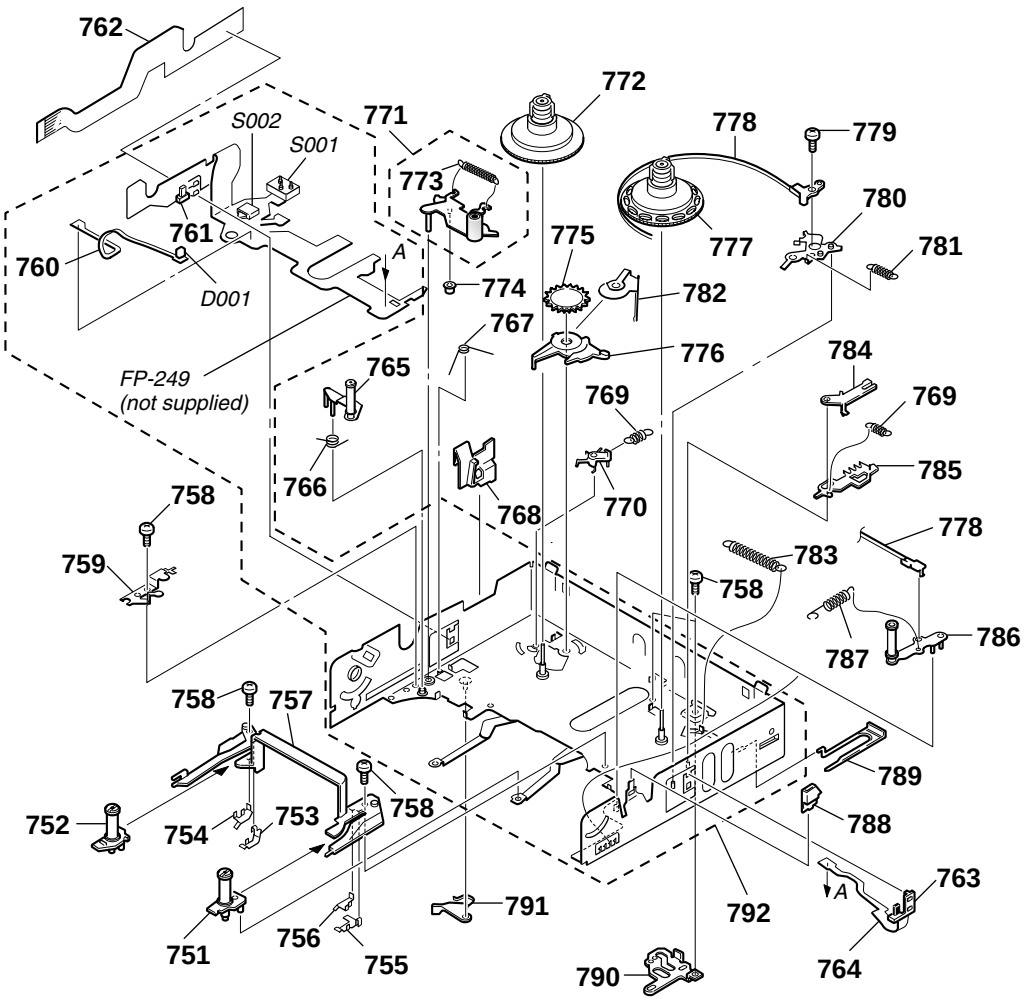

Ref. No.	Part No.	Description	Ref. page No.
751	A-7040-419-A	BASE (S) BLOCK ASSY, GUIDE	
752	A-7040-418-B	BASE (T) BLOCK ASSY, GUIDE	
753	3-965-559-01	STOPPER (T)	
754	3-965-557-01	STOPPER (T), GB	
755	3-965-558-01	STOPPER (S)	
756	3-965-556-01	STOPPER (S), GB	
757	3-965-553-01	RAIL, GUIDE	
758	3-947-503-01	SCREW (M1.4)	
759	3-965-573-01	RETAINER, TG4	
760	1-658-213-11	FP-355 FLEXIBLE BOARD	
761	3-965-552-01	HOLDER (T), SENSOR	
762	1-657-786-13	FP-221 FLEXIBLE BOARD	
763	3-965-551-01	HOLDER (S), SENSOR	
764	1-658-214-11	FP-356 FLEXIBLE BOARD	
765	A-7040-417-A	ARM BLOCK ASSY, TG4	
766	3-965-574-01	SPRING (RETURN, TG4), TORSION	
767	3-965-575-01	SPRING (PINCH), TORSION	
768	3-965-568-11	GUIDE, LOCK	
769	3-965-562-01	SPRING (RATCHET), TENSION	
770	3-965-581-03	RATCHET, T	
771	X-3949-380-1	ARM ASSY (E), PINCH	
772	X-3945-398-2	DECK ASSY, REEL,	
773	3-965-648-01	SPRING (PINCH), TENSION	

Ref. No.	Part No.	Description	Ref. page No.
774	3-965-579-01	ROLLER, PINCH PRESS	
775	3-965-563-01	GEAR, T SOFT	
776	3-965-565-01	CLAW, T SOFT	
777	X-3945-397-1	DECK ASSY, REEL, S	
778	X-3945-396-1	BAND ASSY, TENSION REGULATOR	
779	3-945-756-01	SCREW (M1.4X3)	
780	3-965-583-01	ARM, RVS	
781	3-965-580-01	SPRING (ARM, RVS), TENSION	
782	3-966-384-01	SPRING, T SOFT	
783	3-965-578-01	SPRING, TENSION COIL	
784	3-965-560-01	RATCHET, S	
785	3-965-561-01	PLATE, RELEASE, S RATCHET	
786	X-3945-395-1	ARM ASSY, TG1	
787	3-965-576-01	SPRING (TG1), TENSION	
788	3-965-567-01	LID OPEN	
789	3-965-566-01	COVER, LS GUIDE	
* 790	3-965-577-01	PLATE, CAM, LS	
791	3-965-569-01	ARM, EJ	
792	A-7040-427-B	CHASSIS (S1) ASSY, LS	
D001	8-719-988-42	DIODE GL453	
S001	1-692-614-11	SWITCH, PUSH (3 KEY) (Hi8 MP, ME/MP, REC PROOF)	
S002	1-572-688-11	SWITCH, PUSH (1 KEY) (C LOCK)	

6-1-11. MECHANISM CHASSIS ASSEMBLY

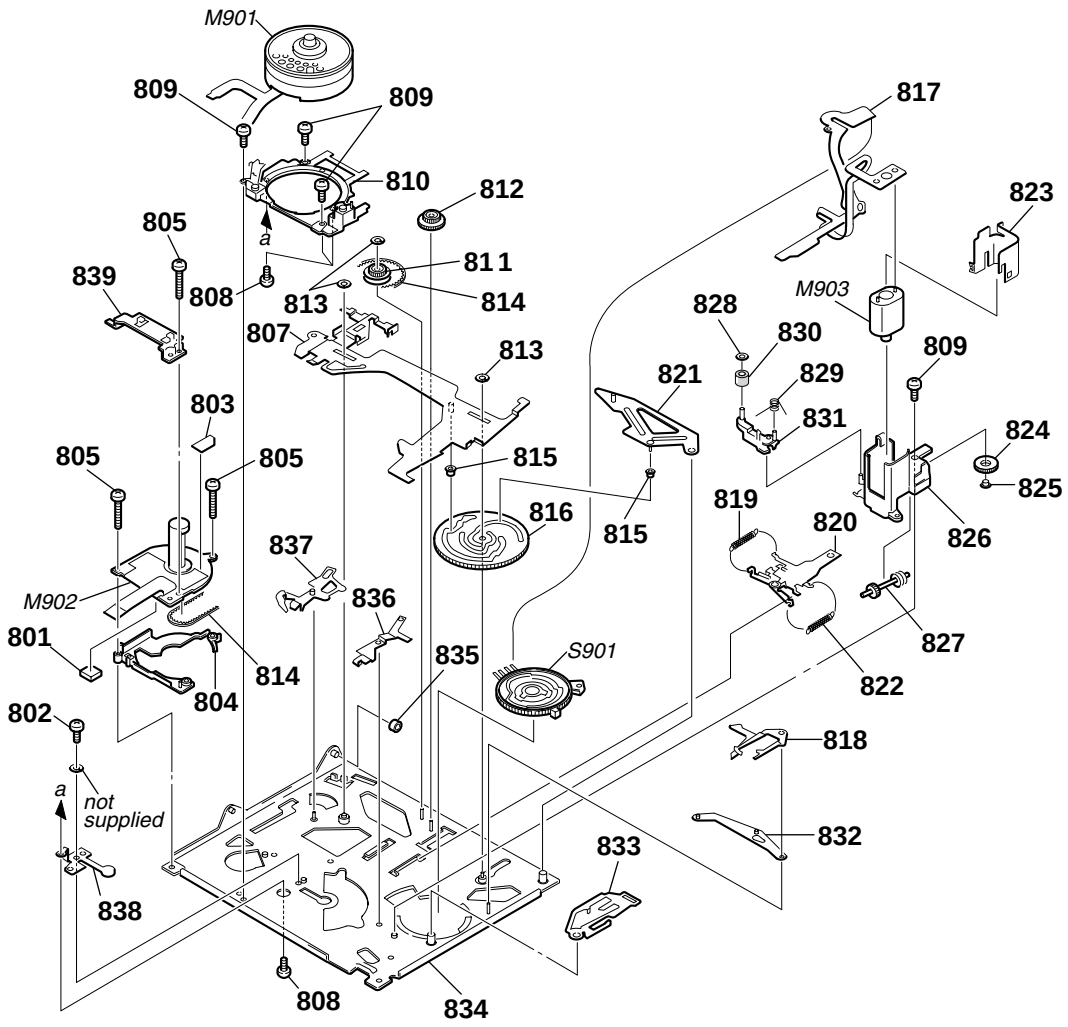

Ref. No.	Part No.	Description	Ref. page No.
801	3-987-953-01	SPACER, RUBBER	
802	3-965-550-02	SCREW (M1.7X1.6)	
803	1-657-785-11	FP-248 FLEXIBLE BOARD	
804	3-054-404-01	SPACER, CAPSTAN	
805	3-965-549-01	SCREW (M1.4 X 6.5)	
807	3-971-644-02	SLIDER (2), M	
808	X-3947-895-1	SCREW ASSY, DRUM ATTACHED	
809	3-947-503-01	SCREW (M1.4)	
810	A-7040-494-A	BASE BLOCK ASSY, DRUM	
811	3-965-527-01	GEAR, CHANGE	
812	3-965-544-01	GEAR, RELAY	
813	3-331-007-21	WASHER	
814	3-965-546-01	BELT, TIMING	
815	3-965-533-01	ROLLER, LS	
816	3-965-528-01	GEAR, CAM	
817	1-657-784-11	FP-220 FLEXIBLE BOARD	
818	3-965-529-01	PLATE, REGULATOR, TENSION	
819	3-965-536-01	SPRING (LIMITTER ARM T), COIL	
820	X-3945-388-1	SLIDER ASSY, GL	
821	3-965-532-21	ARM, LS	
822	3-965-535-01	SPRING (LIMITTER ARM S), COIL	

Ref. No.	Part No.	Description	Ref. page No.
823	3-965-542-01	SHIELD, MOTOR	
824	3-965-539-01	GEAR (A)	
825	3-965-538-01	SLEEVE, MOTOR HOLDER	
826	3-965-540-01	HOLDER, MOTOR	
827	3-965-541-01	SHAFT, WORM	
828	3-321-393-01	WASHER, STOPPER	
829	3-965-724-01	SPRING (RETURN, HC), TORSION	
830	A-7040-423-A	ROLLER BLOCK ASSY, HC	
831	X-3945-407-1	ARM ASSY, HC ROLLER	
832	3-965-531-01	ARM, GL	
833	3-965-530-01	PLATE (2), REGULATOR, TENSION	
834	X-3949-589-3	CHASSIS ASSY, MECHANICAL	
835	3-965-526-02	ROLLER, LS GUIDE	
836	3-965-547-01	ARM, HC DRIVING	
837	3-965-534-01	PLATE, PRESS, PINCH	
838	3-974-320-02	GROUND (IM), SHAFT	
839	3-966-349-01	HOLDER, FLEXIBLE	
M901	A-7048-938-A	DRUM BLOCK ASSY (DKH-02A-R)	
M902	8-835-531-32	MOTOR, DC SCE-0601A/C-NP (CAPSTAN)	
M903	X-3945-401-1	MOTOR ASSY, DC (LOADING)	
S901	1-762-436-15	SWITCH (ENCODER), ROTARY	

6-2. ELECTRICAL PARTS LIST

NOTE:
- Due to standardization, replacements in the parts list may be different from the parts specified in the diagrams or the components used on the set.
- -XX and -X mean standardized parts, so they may have some difference from the original one.
- RESISTORS
  All resistors are in ohms.
  METAL: Metal-film resistor.
  METAL OXIDE: Metal oxide-film resistor.
  F: nonflammable
- Items marked "*" are not stocked since they are seldom required for routine service.
  Some delay should be anticipated when ordering these items.
- SEMICONDUCTORS
  In each case, u: µ, for example:
  uA. . : µA. . uPA. . : µPA. .
  uPB. . : µPB. . uPC. . : µPC. .
  uPD. . : µPD. .
- CAPACITORS
  uF: µF
- COILS
  uH: µH
- Abbreviation
  AR : Argentina model
  AUS : Australian model
  BR : Brazilian model
  CN : Chinese model
  CND : Canadian model
  EE : East European model
  HK : Hong Kong model
  JE : Tourist model
  KR : Korea model
  NE : North European model
  RU : Russian model

The components identified by mark ⚠ or dotted line with mark ⚠ are critical for safety.
Replace only with part number specified.

Les composants identifiés par une marque ⚠ sont critiquens pour la sécurité.
Ne les remplacer que par une pièce portant le numéro spécifié.

When indicating parts by reference number, please include the board.

Ref. No.	Part No.	Description			Remark
	A-7074-270-A	CD-242 BOARD, COMPLETE (TRV120/TRV120P)			
		********** (Ref. No.: 20, 000 Series)			
		(IC101 is not included in this complete board)			
		< CAPACITOR >			
C102	1-119-751-11	TANTALUM CHIP	22uF	20%	16V
C105	1-107-826-91	CERAMIC CHIP	0.1uF	10%	16V
C106	1-113-682-11	TANTALUM CHIP	33uF	20%	10V
C108	1-164-360-11	CERAMIC CHIP	0.1uF		16V
		< CONNECTOR >			
CN101	1-766-346-21	CONNECTOR, FFC/FPC 16P			
		< COIL >			
L102	1-469-528-91	INDUCTOR	100uH		
		< IC >			
IC101	A-7030-821-A	CCD BLOCK ASSY (CCD IMAGER)			
		< TRANSISTOR >			
Q101	8-729-117-73	TRANSISTOR	2SC4178-F13F14-T1		
		< RESISTOR >			
R101	1-216-864-11	METAL CHIP	0	5%	1/16W
R102	1-216-864-11	METAL CHIP	0	5%	1/16W
R103	1-216-827-11	METAL CHIP	3.3K	5%	1/16W
R105	1-216-857-11	METAL CHIP	1M	5%	1/16W
	A-7074-279-A	CD-244 BOARD, COMPLETE (TRV120E/TRV125E)			
	A-7074-286-A	CD-269 BOARD, COMPLETE (TR8000E/TR8100E)			
		********** (Ref. No.: 20, 000 Series)			
		(IC151is not included in this complete board)			
		< CAPACITOR >			
C151	1-162-964-11	CERAMIC CHIP	0.001uF	10%	50V
C152	1-119-751-11	TANTALUM CHIP	22uF	20%	16V
C155	1-113-682-11	TANTALUM CHIP	33uF	20%	10V
C156	1-162-915-11	CERAMIC CHIP	10PF	0.5PF	50V
C157	1-164-360-11	CERAMIC CHIP	0.1uF		16V
C158	1-135-177-21	TANTALUM CHIP	1uF	20%	20V
C159	1-127-820-91	CERAMIC	4.7uF		16V
		< CONNECTOR >			
CN151	1-766-346-21	CONNECTOR, FFC/FPC 16P			
		< FERRITE BEAD >			
* FB001	1-500-282-11	INDUCTOR CHIP	0uH		
		< IC >			
IC151	A-7031-072-A	CCD BLOCK ASSY (CCD IMAGER)			
IC152	8-759-561-46	IC AD8014ART-REEL7			
		< COIL >			
L151	1-469-528-91	INDUCTOR	100uH		
L152	1-469-528-91	INDUCTOR	100uH		
		< RESISTOR >			
R151	1-216-808-11	METAL CHIP	82	5%	1/16W
R154	1-216-821-11	METAL CHIP	1K	5%	1/16W
R155	1-216-829-11	METAL CHIP	4.7K	5%	1/16W
R156	1-216-830-11	METAL CHIP	5.6K	5%	1/16W
R157	1-216-864-11	METAL CHIP	0	5%	1/16W
	A-7074-268-A	CF-69 BOARD, COMPLETE (TRV120/TRV120E/TRV120P/TRV125E)			
		********** (Ref. No.: 20, 000 Series)			
		< BATTERY HOLDER >			
BH001	1-550-104-11	HOLDER, BATTERY			
		< CAPACITOR >			
C001	1-162-970-11	CERAMIC CHIP	0.01uF	10%	25V

(Note) Be sure to read "Precautions for Replcement of CCD Imager" on page 4-8, 4-10 when changing the CCD imager

Ref. No.	Part No.	Description	Remark
		< CONNECTOR >	
CN001	1-785-760-11	CONNECTOR, FFC/FPC (ZIF) 45P	
* CN002	1-785-379-01	HOUSING, CONNECTOR	
CN003	1-778-506-21	PIN, CONNECTOR (PC BOARD) 2P	
CN004	1-779-064-11	PIN, CONNECTOR (PC BOARD) 12P	
CN005	1-778-508-21	PIN, CONNECTOR (PC BOARD) 6P	
* CN007	1-778-283-11	CONNECTOR, FFC/FPC 4P	
* CN008	1-580-055-21	PIN, CONNECTOR (SMD) 2P	
		< DIODE >	
D001	8-719-062-16	DIODE 01ZA8.2 (TPL3)	
D005	8-719-069-59	DIODE UDZS-TE17-8.2B	
D006	8-719-069-59	DIODE UDZS-TE17-8.2B	
D008	8-719-027-76	DIODE 1SS357-TPH3	
D009	8-719-016-74	DIODE 1SS352-TPH3	
		< TRANSISTOR >	
Q002	8-729-230-63	TRANSISTOR 2SC4116YG-TE85L	
Q003	8-729-230-72	TRANSISTOR 2SA1362-YG-EL	
		< RESISTOR >	
R001	1-216-833-91	RES-CHIP 10K 5% 1/16W	
R002	1-216-833-91	RES-CHIP 10K 5% 1/16W	
R003	1-216-833-91	RES-CHIP 10K 5% 1/16W	
R004	1-216-833-91	RES-CHIP 10K 5% 1/16W	
R005	1-216-833-91	RES-CHIP 10K 5% 1/16W	
R006	1-216-822-11	METAL CHIP 1.2K 5% 1/16W	
R007	1-216-822-11	METAL CHIP 1.2K 5% 1/16W	
R008	1-216-822-11	METAL CHIP 1.2K 5% 1/16W	
R009	1-216-822-11	METAL CHIP 1.2K 5% 1/16W	
R010	1-216-814-11	METAL CHIP 270 5% 1/16W	
R011	1-216-864-11	METAL CHIP 0 5% 1/16W	
R012	1-216-845-11	METAL CHIP 100K 5% 1/16W	
R013	1-216-803-11	METAL CHIP 33 5% 1/16W	
R014	1-216-823-11	METAL CHIP 1.5K 5% 1/16W	
R015	1-216-823-11	METAL CHIP 1.5K 5% 1/16W	
R016	1-216-823-11	METAL CHIP 1.5K 5% 1/16W	
R017	1-216-823-11	METAL CHIP 1.5K 5% 1/16W	
R019	1-216-816-11	METAL CHIP 390 5% 1/16W	
R020	1-216-825-11	METAL CHIP 2.2K 5% 1/16W	
R021	1-216-825-11	METAL CHIP 2.2K 5% 1/16W	
R022	1-216-825-11	METAL CHIP 2.2K 5% 1/16W	
R023	1-216-825-11	METAL CHIP 2.2K 5% 1/16W	
R024	1-216-828-11	METAL CHIP 3.9K 5% 1/16W	
R025	1-216-828-11	METAL CHIP 3.9K 5% 1/16W	
R026	1-216-828-11	METAL CHIP 3.9K 5% 1/16W	
R027	1-216-828-11	METAL CHIP 3.9K 5% 1/16W	
R030	1-216-832-11	METAL CHIP 8.2K 5% 1/16W	
R031	1-216-832-11	METAL CHIP 8.2K 5% 1/16W	
R032	1-216-832-11	METAL CHIP 8.2K 5% 1/16W	
R038	1-216-838-11	METAL CHIP 27K 5% 1/16W	
R039	1-216-838-11	METAL CHIP 27K 5% 1/16W	
R040	1-216-838-11	METAL CHIP 27K 5% 1/16W	
R047	1-216-864-11	METAL CHIP 0 5% 1/16W	
R048	1-216-864-11	METAL CHIP 0 5% 1/16W	
R052	1-216-864-11	METAL CHIP 0 5% 1/16W	
R053	1-216-864-11	METAL CHIP 0 5% 1/16W	
R054	1-216-814-11	METAL CHIP 270 5% 1/16W	

Ref. No.	Part No.	Description	Remark
		< SWITCH >	
S001	1-771-138-61	SWITCH, KEY BOARD (DIGITAL EFFECT)	
S003	1-771-138-61	SWITCH, KEY BOARD (PICTURE EFFECT)	
S005	1-771-138-61	SWITCH, KEY BOARD (DATA CODE)	
S006	1-771-025-41	SWITCH, ROTARY (ENCODER)	(SEL/PUSH EXEC)
S007	1-771-138-61	SWITCH, KEY BOARD (MENU)	
S009	1-771-138-61	SWITCH, KEY BOARD (END SEARCH)	
S010	1-771-138-61	SWITCH, KEY BOARD (TITLE)	
S013	1-771-029-21	SWITCH, TACTILE (EXPOSURE)	
S014	1-771-138-61	SWITCH, KEY BOARD (PB ZOOM)	
S016	1-771-138-61	SWITCH, KEY BOARD (DISPLAY)	
S017	1-771-029-21	SWITCH, TACTILE (PROGRAM AE)	
S019	1-771-029-21	SWITCH, TACTILE (BACK LIGHT)	
S020	1-771-029-31	SWITCH, TACTILE (FADER)	
	A-7074-284-A	CF-71 BOARD, COMPLETE	(TR8000E/TR8100E)
		**********	(Ref. No.: 30, 000 Series)
		< BATTERY HOLDER >	
BH001	1-550-104-11	HOLDER, BATTERY	
		< BUZZER >	
BZ001	1-529-107-11	BUZZER, PIEZOELECTRIC	
		< CAPACITOR >	
C005	1-107-826-91	CERAMIC CHIP 0.1uF 10% 16V	
		< CONNECTOR >	
CN001	1-785-760-11	CONNECTOR, FFC/FPC (ZIF) 45P	
* CN005	1-778-283-11	CONNECTOR, FFC/FPC 4P	
CN006	1-764-532-21	CONNECTOR, FFC/FPC (ZIF) 26P	
* CN008	1-778-283-11	CONNECTOR, FFC/FPC 4P	
		< DIODE >	
D001	8-719-027-76	DIODE 1SS357-TPH3	
D002	8-719-069-59	DIODE UDZS-TE17-8.2B	
D004	8-719-069-59	DIODE UDZS-TE17-8.2B	
D005	8-719-069-59	DIODE UDZS-TE17-8.2B	
D007	8-719-016-74	DIODE 1SS352-TPH3	
D007	8-719-988-61	DIODE 1SS355TE-17	
		< IC >	
IC002	8-759-573-02	IC BU9735K-E2	
		< TRANSISTOR >	
Q002	8-729-230-63	TRANSISTOR 2SC4116YG-TE85L	
Q003	8-729-230-72	TRANSISTOR 2SA1362-YG-EL	
		< RESISTOR >	
R001	1-216-814-11	METAL CHIP 270 5% 1/16W	
R002	1-216-864-11	METAL CHIP 0 5% 1/16W	
R003	1-216-845-11	METAL CHIP 100K 5% 1/16W	
R004	1-216-803-11	METAL CHIP 33 5% 1/16W	
R005	1-216-833-91	RES-CHIP 10K 5% 1/16W	
R006	1-216-833-91	RES-CHIP 10K 5% 1/16W	

Ref. No.	Part No.	Description			Remark
R007	1-216-833-91	RES-CHIP	10K	5%	1/16W
R009	1-216-816-11	METAL CHIP	390	5%	1/16W
R010	1-216-864-11	METAL CHIP	0	5%	1/16W
R011	1-216-822-11	METAL CHIP	1.2K	5%	1/16W
R012	1-216-822-11	METAL CHIP	1.2K	5%	1/16W
R013	1-216-822-11	METAL CHIP	1.2K	5%	1/16W
R016	1-216-823-11	METAL CHIP	1.5K	5%	1/16W
R017	1-216-823-11	METAL CHIP	1.5K	5%	1/16W
R018	1-216-823-11	METAL CHIP	1.5K	5%	1/16W
R019	1-216-855-11	METAL CHIP	680K	5%	1/16W
R020	1-216-825-11	METAL CHIP	2.2K	5%	1/16W
R021	1-216-825-11	METAL CHIP	2.2K	5%	1/16W
R022	1-216-825-11	METAL CHIP	2.2K	5%	1/16W
R023	1-216-828-11	METAL CHIP	3.9K	5%	1/16W
R024	1-216-828-11	METAL CHIP	3.9K	5%	1/16W
R025	1-216-828-11	METAL CHIP	3.9K	5%	1/16W
R026	1-216-832-11	METAL CHIP	8.2K	5%	1/16W
R027	1-216-832-11	METAL CHIP	8.2K	5%	1/16W
R032	1-216-838-11	METAL CHIP	27K	5%	1/16W
R033	1-216-838-11	METAL CHIP	27K	5%	1/16W
R044	1-216-833-91	RES-CHIP	10K	5%	1/16W
R045	1-216-833-91	RES-CHIP	10K	5%	1/16W
R046	1-216-864-11	METAL CHIP	0	5%	1/16W
R052	1-216-814-11	METAL CHIP	270	5%	1/16W
		< SWITCH >			
S001	1-771-138-61	SWITCH, KEY BOARD (DIGITAL EFFECT)			
S002	1-771-138-61	SWITCH, KEY BOARD (PICTURE EFFECT)			
S003	1-771-138-61	SWITCH, KEY BOARD (DATA CODE)			
S004	1-771-025-41	SWITCH, ROTARY (ENCODER) (SEL/PUSH EXEC)			
S005	1-771-029-21	SWITCH, TACTILE (MENU)			
S006	1-771-029-21	SWITCH, TACTILE (TITLE)			
S007	1-771-029-21	SWITCH, TACTILE (EXPOSURE)			
S008	1-771-138-61	SWITCH, KEY BOARD (PB ZOOM)			
S009	1-771-138-61	SWITCH, KEY BOARD (PROGRAM AE)			
S010	1-771-138-61	SWITCH, KEY BOARD (BACK LIGHT)			
S011	1-771-138-61	SWITCH, KEY BOARD (FADER)			

		FP-249 BOARD, COMPLETE (Not Supplied)
		**********
		(Ref. No.: 10, 000 Series)
	1-658-214-11	FP-356 FLEXIBLE BOARD
	3-965-551-01	HOLDER (S), SENSOR
	3-965-552-01	HOLDER (T), SENSOR
		< HOLE ELEMENT >
H001	8-719-061-28	DIODE HW-105C-FT-V (S REEL SENSOR)
H002	8-719-061-28	DIODE HW-105C-FT-V (T REEL SENSOR)
		< TRANSISTOR >
Q001	8-729-907-25	PHOTO TRANSISTOR PT4850F (TAPE END)
Q002	8-729-907-25	PHOTO TRANSISTOR PT4850F (TAPE TOP)
		< SWITCH >
S001	1-692-614-11	SWITCH, PUSH (3 KEY) (Hi8 MP, ME/MP, REC PROOF)
S002	1-572-688-11	SWITCH, PUSH (1 KEY) (C LOCK)

	1-658-213-11	FP-355 FLEXIBLE BOARD
		**********
		(Ref. No.: 10, 000 Series)
D001	8-719-988-42	DIODE GL453

	A-7074-271-A	FU-138 BOARD, COMPLETE (TRV120/TRV120E/TRV120P/TRV125E)
	A-7074-287-A	FU-143 BOARD, COMPLETE (TR8000E/TR8100E)
		**********
		(Ref. No.: 20, 000 Series)
		< CAPACITOR >

C251	1-107-826-91	CERAMIC CHIP	0.1uF	10%	16V
C252	1-107-826-91	CERAMIC CHIP	0.1uF	10%	16V
C253	1-164-227-11	CERAMIC CHIP	0.022uF	10%	25V
C255	1-119-751-11	TANTALUM CHIP	22uF	20%	16V
C256	1-119-751-11	TANTALUM CHIP	22uF	20%	16V
C257	1-119-751-11	TANTALUM CHIP	22uF	20%	16V
C261	1-109-982-11	CERAMIC CHIP	1uF	10%	10V

		< CONNECTOR >	
* CN252	1-580-756-21	PIN, CONNECTOR (SMD) 7P	
CN253	1-691-485-21	CONNECTOR, FFC/FPC 6P	
CN254	1-794-174-21	CONNECTOR BOARD TO BOARD 42P	
		< DIODE >	
D251	8-719-069-59	DIODE UDZS-TE17-8.2B	
D252	8-719-027-76	DIODE 1SS357-TPH3	
D253	8-719-062-16	DIODE 01ZA8.2 (TPL3)	
D256	8-719-027-76	DIODE 1SS357-TPH3	
D257	8-719-016-74	DIODE 1SS352-TPH3	
D560	8-719-016-74	DIODE 1SS352-TPH3	
		< FUSE >	
⚠F251	1-576-406-21	FUSE, MICRO (1608) (1.4A/32V)	
⚠F252	1-576-406-21	FUSE, MICRO (1608) (1.4A/32V)	
⚠F254	1-576-406-21	FUSE, MICRO (1608) (1.4A/32V)	
⚠F256	1-576-406-21	FUSE, MICRO (1608) (1.4A/32V)	
⚠F257	1-576-406-21	FUSE, MICRO (1608) (1.4A/32V) (TRV120/TRV120P/TRV120E/TRV125E)	
⚠F258	1-576-406-21	FUSE, MICRO (1608) (1.4A/32V)	
		< COIL >	
L251	1-412-056-11	INDUCTOR CHIP 4.7Uh (TRV120/TRV120E/TRV120P/TRV125E)	
		< TRANSISTOR >	
Q251	8-729-047-68	TRANSISTOR SSM3K03FE (TPL3)	
Q252	8-729-051-49	TRANSISTOR TPC8305 (TE12L)	
Q253	8-729-804-41	TRANSISTOR 2SB1122-ST-TD	
Q254	8-729-042-29	TRANSISTOR RN1104F (TPL3)	
Q255	8-729-047-68	TRANSISTOR SSM3K03FE (TPL3)	
Q256	8-729-042-29	TRANSISTOR RN1104F (TPL3)	

The components identified by mark ⚠ or dotted line with mark ⚠ are critical for safety. Replace only with part number specified.	Les composants identifiés par une marque ⚠ sont critiques pour la sécurité. Ne les remplacer que par une pièce portant le numéro spécifié.

Ref. No.	Part No.	Description			Remark
Q257	8-729-042-56	TRANSISTOR MGSF3455VT1			
		< RESISTOR >			
R251	1-216-821-11	METAL CHIP	1K	5%	1/16W
R252	1-216-296-91	SHORT	0		
R253	1-216-296-91	SHORT	0		
R254	1-216-853-11	METAL CHIP	470K	5%	1/16W
R255	1-216-857-11	METAL CHIP	1M	5%	1/16W
R256	1-216-150-91	RES-CHIP	10	5%	1/8W
R257	1-216-821-11	METAL CHIP	1K	5%	1/16W
R258	1-216-831-11	METAL CHIP	6.8K	5%	1/16W
R259	1-216-841-11	METAL CHIP	47K	5%	1/16W
R260	1-216-833-91	RES-CHIP	10K	5%	1/16W
R261	1-216-857-11	METAL CHIP	1M	5%	1/16W
R263	1-216-821-11	METAL CHIP	1K	5%	1/16W
	A-7074-267-A	MI-37 BOARD, COMPLETE (TRV120/TRV120P)			
	A-7074-277-A	MI-37 BOARD, COMPLETE (TRV120E/TRV125E/TR8000E/TR8100E)			
		********** (Ref. No.: 10, 000 Series)			
		< CAPACITOR >			
C3900	1-135-259-11	TANTALUM CHIP	10uF	20%	6.3V
C3901	1-125-837-91	CERAMIC CHIP	1uF	10%	6.3V (TRV120E/TRV125E/TR8000E/TR8100E)
C3902	1-135-201-11	TANTALUM CHIP	10uF	20%	4V (TRV120/TRV120P)
C3903	1-135-259-11	TANTALUM CHIP	10uF	20%	6.3V (TRV120/TRV120P)
C3904	1-164-943-11	CERAMIC CHIP	0.01uF	10%	16V
C3905	1-117-863-11	CERAMIC CHIP	0.47uF	10%	6.3V
C3906	1-117-863-11	CERAMIC CHIP	0.47uF	10%	6.3V
C3907	1-125-777-11	CERAMIC CHIP	0.1uF	10%	10V
C3908	1-125-837-91	CERAMIC CHIP	1uF	10%	6.3V
C3909	1-164-943-11	CERAMIC CHIP	0.01uF	10%	16V
C3910	1-119-660-11	TANTALUM CHIP	4.7uF	20%	6.3V
C3911	1-164-943-11	CERAMIC CHIP	0.01uF	10%	16V
C3912	1-164-943-11	CERAMIC CHIP	0.01uF	10%	16V
C3913	1-164-668-11	CERAMIC CHIP	510PF	5%	50V
C3914	1-135-259-11	TANTALUM CHIP	10uF	20%	6.3V
C3915	1-164-943-11	CERAMIC CHIP	0.01uF	10%	16V
C3916	1-125-837-91	CERAMIC CHIP	1uF	10%	6.3V
C3917	1-107-826-91	CERAMIC CHIP	0.1uF	10%	16V
C3918	1-164-844-11	CERAMIC CHIP	4PF	0.25PF	16V
C3919	1-117-863-11	CERAMIC CHIP	0.47uF	10%	6.3V
C3920	1-117-863-11	CERAMIC CHIP	0.47uF	10%	6.3V
C3921	1-164-862-11	CERAMIC CHIP	33PF	5%	16V
C3922	1-125-837-91	CERAMIC CHIP	1uF	10%	6.3V
C3923	1-164-864-11	CERAMIC CHIP	39PF	5%	16V
C3924	1-125-837-91	CERAMIC CHIP	1uF	10%	6.3V
C3925	1-107-826-91	CERAMIC CHIP	0.1uF	10%	16V
C3926	1-164-943-11	CERAMIC CHIP	0.01uF	10%	16V
C3927	1-164-943-11	CERAMIC CHIP	0.01uF	10%	16V
C3928	1-104-847-11	TANTALUM CHIP	22uF	20%	4V
C3929	1-164-943-11	CERAMIC CHIP	0.01uF	10%	16V
C3931	1-125-777-11	CERAMIC CHIP	0.1uF	10%	10V
C3933	1-107-686-11	TANTALUM CHIP	4.7uF	20%	16V
C3934	1-125-837-91	CERAMIC CHIP	1uF	10%	6.3V
C3935	1-164-943-11	CERAMIC CHIP	0.01uF	10%	16V
C3936	1-164-943-11	CERAMIC CHIP	0.01uF	10%	16V
C5806	1-164-943-11	CERAMIC CHIP	0.01uF	10%	16V
C5807	1-107-819-11	CERAMIC CHIP	0.022uF	10%	16V
C5808	1-107-819-11	CERAMIC CHIP	0.022uF	10%	16V
C5809	1-164-943-11	CERAMIC CHIP	0.01uF	10%	16V
C5810	1-164-943-11	CERAMIC CHIP	0.01uF	10%	16V
C5812	1-135-201-11	TANTALUM CHIP	10uF	20%	4V
C5813	1-164-874-11	CERAMIC CHIP	100PF	5%	16V
C5814	1-164-937-11	CERAMIC CHIP	0.001uF	10%	16V
C5815	1-135-201-11	TANTALUM CHIP	10uF	20%	4V
C5816	1-164-874-11	CERAMIC CHIP	100PF	5%	16V
C5817	1-164-937-11	CERAMIC CHIP	0.001uF	10%	16V
C5819	1-164-874-11	CERAMIC CHIP	100PF	5%	16V
C5820	1-164-874-11	CERAMIC CHIP	100PF	5%	16V
C5822	1-125-777-11	CERAMIC CHIP	0.1uF	10%	10V
C5823	1-125-777-11	CERAMIC CHIP	0.1uF	10%	10V
C5824	1-125-777-11	CERAMIC CHIP	0.1uF	10%	10V
C5825	1-125-777-11	CERAMIC CHIP	0.1uF	10%	10V
C5826	1-110-563-11	CERAMIC CHIP	0.068uF	10%	16V
C5827	1-110-563-11	CERAMIC CHIP	0.068uF	10%	16V
C5829	1-164-227-11	CERAMIC CHIP	0.022uF	10%	25V
C5830	1-164-227-11	CERAMIC CHIP	0.022uF	10%	25V
C5832	1-164-245-11	CERAMIC CHIP	0.015uF	10%	25V
C5833	1-164-941-11	CERAMIC CHIP	0.0047uF	10%	16V
C5835	1-164-941-11	CERAMIC CHIP	0.0047uF	10%	16V
C5836	1-164-245-11	CERAMIC CHIP	0.015uF	10%	25V
C5838	1-125-777-11	CERAMIC CHIP	0.1uF	10%	10V
C5839	1-104-847-11	TANTALUM CHIP	22uF	20%	4V
C5840	1-165-128-11	CERAMIC CHIP	0.22uF		16V
C5841	1-125-837-91	CERAMIC CHIP	1uF	10%	6.3V
		< CONNECTOR >			
CN5801	1-766-344-21	CONNECTOR, FFC/FPC 14P			
* CN5802	1-695-320-21	PIN, CONNECTOR (1.5mm) (SMD) 2P			
* CN5803	1-695-320-21	PIN, CONNECTOR (1.5mm) (SMD) 2P			
CN5804	1-794-053-21	CONNECTOR, FFC/FPC (LIF) 32P			
		< DIODE >			
D3900	8-719-073-01	DIODE MA111- (K8) .S0			
D3901	8-719-074-30	DIODE SML-310LTT86			
D3903	8-719-060-65	DIODE DAC3825			
D3904	8-719-078-23	DIODE DCR2815			
D5806	8-719-062-16	DIODE 01ZA8.2 (TPL3)			
D5807	8-719-069-59	DIODE UDZS-TE17-8.2B			
		< FUSE >			
⚠F3900	1-533-874-11	FUSE, MICRO (200mA/24V)			
		< IC >			
IC3900	8-749-012-83	IC PNA4S13M01S0			
IC3901	8-759-498-52	IC LA9511W-TBM (TRV120/TRV120P)			
IC3901	8-759-566-96	IC AN2920FHQ-EB (TRV120E/TRV125E/TRV8000E/TRV8100E)			
IC5801	8-759-638-50	IC AN2901FHQ-EB			

The components identified by mark ⚠ or dotted line with mark ⚠ are critical for safety. Replace only with part number specified.

Les composants identifiés par une marque ⚠ sont critiques pour la sécurité.
Ne les remplacer que par une pièce portant le numéro spécifié.

Ref. No.	Part No.	Description			Remark
		< COIL >			
L3900	1-469-525-91	INDUCTOR	10uH		
L3901	1-469-525-91	INDUCTOR	10uH		
L3902	1-412-948-11	INDUCTOR	5.6uH		
L3903	1-412-957-11	INDUCTOR	33uH		
L3904	1-412-957-11	INDUCTOR	33uH		
L5701	1-414-754-11	INDUCTOR	10uH		
L5803	1-412-961-11	INDUCTOR	68uH		
		< TRANSISTOR >			
Q3901	8-729-140-75	TRANSISTOR	2SD999-T1-CLCK		
Q3902	8-729-122-63	TRANSISTOR	2SA1226-T1E4		
Q3903	8-729-037-53	TRANSISTOR	2SA1832F-Y/GR (TPL3)		
		< RESISTOR >			
R3900	1-218-990-11	SHORT	0		
R3901	1-218-951-11	RES-CHIP	680	5%	1/16W
R3902	1-216-001-00	METAL CHIP	10	5%	1/10W
R3903	1-218-968-11	RES-CHIP	18K	5%	1/16W
R3904	1-218-961-11	RES-CHIP	4.7K	5%	1/16W
R3905	1-218-961-11	RES-CHIP	4.7K	5%	1/16W
R3906	1-216-800-11	RES-CHIP	18	5%	1/16W
R3908	1-218-967-11	RES-CHIP	15K	5%	1/16W
R3909	1-218-989-11	RES-CHIP	1M	5%	1/16W
R3910	1-218-990-11	SHORT	0		
R3911	1-208-715-11	METAL CHIP	22K	0.5%	1/16W
R3912	1-218-947-11	RES-CHIP	330	5%	1/16W
R3913	1-218-953-11	RES-CHIP	1K	5%	1/16W
R3916	1-218-949-11	RES-CHIP	470	5%	1/16W
R3917	1-218-979-11	RES-CHIP	150K	5%	1/16W
R3918	1-218-979-11	RES-CHIP	150K	5%	1/16W
R3919	1-218-950-11	RES-CHIP	560	5%	1/16W
R3920	1-218-963-11	RES-CHIP	6.8K	5%	1/16W
R3921	1-218-949-11	RES-CHIP	470	5%	1/16W
R3922	1-218-972-11	RES-CHIP	39K	5%	1/16W
R3923	1-218-949-11	RES-CHIP	470	5%	1/16W
R3924	1-218-949-11	RES-CHIP	470	5%	1/16W
R3936	1-218-955-11	RES-CHIP	1.5K	5%	1/16W
R3938	1-218-990-11	SHORT	0		
R3939	1-218-990-11	SHORT	0		
R5801	1-218-971-11	RES-CHIP	33K	5%	1/16W
R5802	1-218-968-11	RES-CHIP	18K	5%	1/16W
R5803	1-218-957-11	RES-CHIP	2.2K	5%	1/16W
R5804	1-216-864-11	METAL CHIP	0	5%	1/16W
R5805	1-218-961-11	RES-CHIP	4.7K	5%	1/16W
R5806	1-218-965-11	RES-CHIP	10K	5%	1/16W
R5807	1-218-963-11	RES-CHIP	6.8K	5%	1/16W
R5809	1-218-957-11	RES-CHIP	2.2K	5%	1/16W
R5814	1-218-963-11	RES-CHIP	6.8K	5%	1/16W
R5815	1-218-953-11	RES-CHIP	1K	5%	1/16W
R5816	1-218-953-11	RES-CHIP	1K	5%	1/16W
R5817	1-218-962-11	RES-CHIP	5.6K	5%	1/16W
R5818	1-218-962-11	RES-CHIP	5.6K	5%	1/16W
R5819	1-218-966-11	RES-CHIP	12K	5%	1/16W
R5820	1-218-969-11	RES-CHIP	22K	5%	1/16W
R5821	1-218-966-11	RES-CHIP	12K	5%	1/16W
R5822	1-218-969-11	RES-CHIP	22K	5%	1/16W
R5823	1-218-963-11	RES-CHIP	6.8K	5%	1/16W
R5824	1-218-990-11	SHORT	0		
R5825	1-218-990-11	SHORT	0		

Ref. No.	Part No.	Description			Remark
R5826	1-218-963-11	RES-CHIP	6.8K	5%	1/16W
R5827	1-218-968-11	RES-CHIP	18K	5%	1/16W
R5828	1-218-968-11	RES-CHIP	18K	5%	1/16W
R5829	1-218-971-11	RES-CHIP	33K	5%	1/16W
R5831	1-218-990-11	SHORT	0		
R5834	1-218-965-11	RES-CHIP	10K	5%	1/16W
R5835	1-218-990-11	SHORT	0		
R5836	1-218-990-11	SHORT	0		
R5837	1-218-990-11	SHORT	0		
R5840	1-218-990-11	SHORT	0		
R5841	1-218-990-11	SHORT	0		
R5845	1-218-947-11	RES-CHIP	330	5%	1/16W
		< VARISTOR >			
VDR801	1-801-862-11	VARISTOR, CHIP			
VDR803	1-801-862-11	VARISTOR, CHIP			

	A-7074-272-A	PD-117 (TYPE S 61K) BOARD, COMPLETE (TRV120/TRV120P)			
	A-7074-280-A	PD-117 (TYPE S 123K) BOARD, COMPLETE (TRV120E: AEP, UK, EE, NE, RU/TRV125E)			
		********** (Ref. No.: 20, 000 Series)			
		< CAPACITOR >			
C5501	1-135-259-11	TANTALUM CHIP	10uF	20%	6.3V
C5503	1-107-826-91	CERAMIC CHIP	0.1uF	10%	16V
C5504	1-107-826-91	CERAMIC CHIP	0.1uF	10%	16V
C5505	1-162-970-11	CERAMIC CHIP	0.01uF	10%	25V
C5506	1-162-970-11	CERAMIC CHIP	0.01uF	10%	25V
C5507	1-162-970-11	CERAMIC CHIP	0.01uF	10%	25V
C5508	1-107-826-91	CERAMIC CHIP	0.1uF	10%	16V
C5509	1-107-687-11	TANTALUM CHIP	3.3uF	20%	20V
C5510	1-107-826-91	CERAMIC CHIP	0.1uF	10%	16V
C5511	1-164-739-11	CERAMIC CHIP	560PF	5%	50V
C5512	1-107-826-91	CERAMIC CHIP	0.1uF	10%	16V
C5513	1-107-826-91	CERAMIC CHIP	0.1uF	10%	16V
C5514	1-119-750-11	TANTALUM CHIP	22uF	20%	6.3V
C5515	1-164-357-11	CERAMIC CHIP	1000PF	5%	50V
C5516	1-162-927-11	CERAMIC CHIP	100PF	5%	50V (TRV120/TRV120P)
C5516	1-162-925-11	CERAMIC CHIP	68PF	5%	50V (TRV120E: AEP, UK, EE, NE, RU/TRV125E)
C5517	1-164-004-11	CERAMIC CHIP	0.1uF	10%	25V
C5518	1-164-004-11	CERAMIC CHIP	0.1uF	10%	25V
C5519	1-164-004-11	CERAMIC CHIP	0.1uF	10%	25V
C5520	1-113-994-11	TANTALUM CHIP	6.8uF	20%	16V
C5521	1-107-682-11	CERAMIC CHIP	1uF	10%	16V
C5522	1-107-826-91	CERAMIC CHIP	0.1uF	10%	16V
C5523	1-107-826-91	CERAMIC CHIP	0.1uF	10%	16V
C5524	1-107-682-11	CERAMIC CHIP	1uF	10%	16V
C5527	1-162-970-11	CERAMIC CHIP	0.01uF	10%	25V
C5528	1-135-177-21	TANTALUM CHIP	1uF	20%	20V
C5529	1-107-725-11	CERAMIC CHIP	0.1uF	10%	16V
C5530	1-162-970-11	CERAMIC CHIP	0.01uF	10%	25V
C5531	1-162-970-11	CERAMIC CHIP	0.01uF	10%	25V
C5602	1-104-851-11	TANTALUM CHIP	10uF	20%	10V
C5603	1-109-982-11	CERAMIC CHIP	1uF	10%	10V
C5604	1-164-657-11	CERAMIC CHIP	0.015u	10%	50V
C5605	1-107-826-91	CERAMIC CHIP	0.1uF	10%	16V

Ref. No.	Part No.	Description			Remark
C5606	1-107-826-91	CERAMIC CHIP	0.1uF	10%	16V
⚠C5607	1-131-959-91	CERAMIC CHIP	12PF	10%	3KV
C5608	1-104-851-11	TANTALUM CHIP	10uF	20%	10V
C5704	1-107-826-91	CERAMIC CHIP	0.1uF	10%	16V
		< CONNECTOR >			
CN5501	1-573-364-11	CONNECTOR, FFC/FPC 24P			
* CN5502	1-573-984-11	CONNECTOR, BOARD TO BOARD 10P			
CN5604	1-764-709-11	CONNECTOR, FFC/FPC (LIF) 10P			
CN5701	1-779-893-11	PIN, CONNECTOR (PC BOARD) 8P			
CN5702	1-779-064-11	PIN, CONNECTOR (PC BOARD) 12P			
CN5703	1-691-344-11	CONNECTOR, FFC/FPC (ZIF) 6P			
CN5704	1-778-508-21	PIN, CONNECTOR (PC BOARD) 6P			
CN5705	1-764-532-21	CONNECTOR, FFC/FPC (ZIF) 26P			
		< DIODE >			
D5502	8-713-102-80	DIODE 1T369-01-T8A			
D5503	8-719-073-01	DIODE MA111- (K8) .S0			
⚠D5601	8-719-073-01	DIODE MA111- (K8) .S0			
D5602	8-719-062-44	DIODE PG1112H-TR			
		< FERRITE BEAD >			
FB5502	1-414-760-21	FERRITE	0uH		
FB5503	1-414-760-21	FERRITE	0uH		
		< IC >			
IC5501	8-759-591-94	IC RB5P0030M1			
IC5502	8-759-660-91	IC LZ9FF424			
IC5503	8-759-478-92	IC TC7SET04FU (TE85R)			
IC5601	8-759-564-49	IC TC7W53FU (TE12R)			
IC5602	8-759-075-70	IC TA75S393F-TE85R			
IC5701	8-759-573-02	IC BU9735K-E2			
		< COIL >			
L5501	1-469-525-91	INDUCTOR	10uH		
L5504	1-469-525-91	INDUCTOR	10uH		
L5505	1-412-956-21	INDUCTOR	27uH (TRV120/TRV120P)		
L5505	1-412-949-21	INDUCTOR	6.8uH (TRV120E: AEP, UK, EE, NE, RU/TRV125E)		
L5601	1-419-387-21	INDUCTOR	100uH		
		< TRANSISTOR >			
Q5501	8-729-037-52	TRANSISTOR 2SC4738F-Y/GR (TPL3)			
Q5502	8-729-041-23	TRANSISTOR MGSF1P02LT1			
Q5503	8-729-037-53	TRANSISTOR 2SB1462J-QR (K8) .SO			
Q5504	8-729-037-53	TRANSISTOR 2SB1462J-QR (K8) .SO			
Q5505	8-729-037-52	TRANSISTOR 2SC4738F-Y/GR (TPL3)			
Q5506	8-729-037-52	TRANSISTOR 2SC4738F-Y/GR (TPL3)			
Q5601	8-729-042-29	TRANSISTOR RN1104F (TPL3)			
Q5602	8-729-039-43	TRANSISTOR FP216-TL			
Q5603	8-729-042-29	TRANSISTOR RN1104F (TPL3)			
Q5604	8-729-042-58	TRANSISTOR RN2102F (TPL3)			
		< RESISTOR >			
R5501	1-216-853-11	METAL CHIP	470K	5%	1/16W
R5503	1-218-895-11	METAL CHIP	100K	0.5%	1/16W
R5504	1-216-845-11	METAL CHIP	100K	5%	1/16W
R5505	1-216-835-11	METAL CHIP	15K	5%	1/16W

Ref. No.	Part No.	Description			Remark
R5506	1-216-826-11	METAL CHIP	2.7K	5%	1/16W
R5507	1-216-841-11	METAL CHIP	47K	5%	1/16W
R5508	1-216-843-11	METAL CHIP	68K	5%	1/16W
R5509	1-216-837-11	METAL CHIP	22K	5%	1/16W
R5510	1-216-843-11	METAL CHIP	68K	5%	1/16W
R5511	1-216-857-11	METAL CHIP	1M	5%	1/16W
R5512	1-216-845-11	METAL CHIP	100K	5%	1/16W
R5513	1-216-857-11	METAL CHIP	1M	5%	1/16W
R5515	1-216-864-11	METAL CHIP	0	5%	1/16W
R5516	1-216-833-91	RES-CHIP	10K	5%	1/16W
R5519	1-216-864-11	METAL CHIP	0	5%	1/16W
R5520	1-216-864-11	METAL CHIP	0	5%	1/16W
R5521	1-216-864-11	METAL CHIP	0	5%	1/16W
R5523	1-216-809-11	METAL CHIP	100	5%	1/16W
R5524	1-216-809-11	METAL CHIP	100	5%	1/16W
R5525	1-216-809-11	METAL CHIP	100	5%	1/16W
R5551	1-216-841-11	METAL CHIP	47K	5%	1/16W
R5553	1-216-821-11	METAL CHIP	1K	5%	1/16W (TRV120/TRV120P)
R5553	1-216-825-11	METAL CHIP	2.2K	5%	1/16W (TRV120E: AEP, UK, EE, NE, RU/TRV125E)
R5557	1-216-864-11	METAL CHIP	0	5%	1/16W
R5560	1-216-853-11	METAL CHIP	470K	5%	1/16W
R5562	1-216-833-91	RES-CHIP	10K	5%	1/16W
R5563	1-216-841-11	METAL CHIP	47K	5%	1/16W
R5564	1-216-857-11	METAL CHIP	1M	5%	1/16W
R5565	1-216-857-11	METAL CHIP	1M	5%	1/16W
R5569	1-216-848-11	METAL CHIP	180K	5%	1/16W
R5608	1-216-864-11	METAL CHIP	0	5%	1/16W
R5609	1-216-833-91	RES-CHIP	10K	5%	1/16W
R5610	1-216-055-00	METAL CHIP	1.8K	5%	1/10W
R5611	1-216-845-11	METAL CHIP	100K	5%	1/16W
R5612	1-216-834-11	METAL CHIP	12K	5%	1/16W
R5613	1-216-055-00	METAL CHIP	1.8K	5%	1/10W
R5614	1-216-833-91	RES-CHIP	10K	5%	1/16W
R5616	1-216-810-11	METAL CHIP	120	5%	1/16W
R5617	1-216-837-11	METAL CHIP	22K	5%	1/16W
R5618	1-216-817-11	METAL CHIP	470	5%	1/16W
R5702	1-216-822-11	METAL CHIP	1.2K	5%	1/16W
R5704	1-216-823-11	METAL CHIP	1.5K	5%	1/16W
R5706	1-216-825-11	METAL CHIP	2.2K	5%	1/16W
R5707	1-216-828-11	METAL CHIP	3.9K	5%	1/16W
R5708	1-216-832-11	METAL CHIP	8.2K	5%	1/16W
R5711	1-216-864-11	METAL CHIP	0	5%	1/16W
R5712	1-216-855-11	METAL CHIP	680K	5%	1/16W
R5714	1-216-864-11	METAL CHIP	0	5%	1/16W
		< SWITCH >			
S5701	1-692-088-41	SWITCH, TACTILE (LCD BRIGHT +)			
S5702	1-692-088-41	SWITCH, TACTILE (LCD BRIGHT -)			
S5703	1-692-088-41	SWITCH, TACTILE (VOLUME +)			
S5704	1-692-088-41	SWITCH, TACTILE (VOLUME -)			
		< TRANSFORMER >			
⚠T5601	1-435-226-11	TRANSFORMER, INVERTER			

The components identified by mark ⚠ or dotted line with mark ⚠ are critical for safety. Replace only with part number specified.

Les composants identifiés par une marque ⚠ sont critiques pour la sécurité.
Ne les remplacer que par une pièce portant le numéro spécifié.

PD-117 (TYPE C)

Ref. No.	Part No.	Description			Remark
	A-7074-290-A	PD-117 (TYPE C) BOARD, COMPLETE (TRV120E: E, HK, AUS, CN, JE)			
		**********			
		(Ref. No.: 20, 000 Series)			
		< CAPACITOR >			
C5501	1-135-259-11	TANTALUM CHIP	10uF	20%	6.3V
C5503	1-107-826-91	CERAMIC CHIP	0.1uF	10%	16V
C5504	1-107-826-91	CERAMIC CHIP	0.1uF	10%	16V
C5505	1-162-970-11	CERAMIC CHIP	0.01uF	10%	25V
C5506	1-162-970-11	CERAMIC CHIP	0.01uF	10%	25V
C5507	1-162-970-11	CERAMIC CHIP	0.01uF	10%	25V
C5508	1-107-826-91	CERAMIC CHIP	0.1uF	10%	16V
C5509	1-107-687-11	TANTALUM CHIP	3.3uF	20%	20V
C5510	1-107-826-91	CERAMIC CHIP	0.1uF	10%	16V
C5511	1-164-739-11	CERAMIC CHIP	560PF	5%	50V
C5512	1-107-826-91	CERAMIC CHIP	0.1uF	10%	16V
C5513	1-107-826-91	CERAMIC CHIP	0.1uF	10%	16V
C5514	1-119-750-11	TANTALUM CHIP	22uF	20%	6.3V
C5515	1-164-357-11	CERAMIC CHIP	1000PF	5%	50V
C5516	1-164-217-11	CERAMIC CHIP	150PF	5%	50V
C5517	1-164-004-11	CERAMIC CHIP	0.1uF	10%	25V
C5518	1-164-004-11	CERAMIC CHIP	0.1uF	10%	25V
C5519	1-164-004-11	CERAMIC CHIP	0.1uF	10%	25V
C5520	1-113-994-11	TANTALUM CHIP	6.8uF	20%	16V
C5521	1-107-682-11	CERAMIC CHIP	1uF	10%	16V
C5522	1-107-826-91	CERAMIC CHIP	0.1uF	10%	16V
C5523	1-107-826-91	CERAMIC CHIP	0.1uF	10%	16V
C5524	1-107-682-11	CERAMIC CHIP	1uF	10%	16V
C5527	1-162-970-11	CERAMIC CHIP	0.01uF	10%	25V
C5529	1-107-725-11	CERAMIC CHIP	0.1uF	10%	16V
C5602	1-104-851-11	TANTALUM CHIP	10uF	20%	10V
C5603	1-109-982-11	CERAMIC CHIP	1uF	10%	10V
C5604	1-164-657-11	CERAMIC CHIP	0.015uF	10%	50V
C5605	1-107-826-91	CERAMIC CHIP	0.1uF	10%	16V
C5606	1-107-826-91	CERAMIC CHIP	0.1uF	10%	16V
⚠C5607	1-131-959-91	CERAMIC CHIP	12PF	10%	3KV
C5608	1-104-851-11	TANTALUM CHIP	10uF	20%	10V
C5704	1-107-826-91	CERAMIC CHIP	0.1uF	10%	16V
		< CONNECTOR >			
CN5501	1-573-364-11	CONNECTOR, FFC/FPC 24P			
* CN5502	1-573-984-11	CONNECTOR, BOARD TO BOARD 10P			
CN5604	1-764-709-11	CONNECTOR, FFC/FPC (LIF) 10P			
CN5701	1-779-893-11	PIN, CONNECTOR (PC BOARD) 8P			
CN5702	1-779-064-11	PIN, CONNECTOR (PC BOARD) 12P			
CN5703	1-691-344-11	CONNECTOR, FFC/FPC (ZIF) 6P			
CN5704	1-778-508-21	PIN, CONNECTOR (PC BOARD) 6P			
CN5705	1-764-532-21	CONNECTOR, FFC/FPC (ZIF) 26P			
		< DIODE >			
D5502	8-713-102-80	DIODE 1T369-01-T8A			
⚠D5601	8-719-073-01	DIODE MA111- (K8) .S0			
D5602	8-719-062-44	DIODE PG1112H-TR			
		< FERRITE BEAD >			
FB5502	1-414-760-21	FERRITE	0uH		
FB5503	1-414-760-21	FERRITE	0uH		

Ref. No.	Part No.	Description			Remark
		< IC >			
IC5501	8-759-591-94	IC RB5P0030M1			
IC5502	8-759-591-93	IC CM7019L3-T4			
IC5601	8-759-564-49	IC TC7W53FU (TE12R)			
IC5602	8-759-075-70	IC TA75S393F-TE85R			
IC5701	8-759-573-02	IC BU9735K-E2			
		< COIL >			
L5501	1-469-525-91	INDUCTOR	10uH		
L5504	1-469-525-91	INDUCTOR	10uH		
L5505	1-412-956-21	INDUCTOR	27uH		
L5601	1-419-387-21	INDUCTOR	100uH		
		< TRANSISTOR >			
Q5501	8-729-037-52	TRANSISTOR	2SC4738F-Y/GR (TPL3)		
Q5601	8-729-042-29	TRANSISTOR	RN1104F (TPL3)		
Q5602	8-729-039-43	TRANSISTOR	FP216-TL		
Q5603	8-729-042-29	TRANSISTOR	RN1104F (TPL3)		
Q5604	8-729-042-58	TRANSISTOR	RN2102F (TPL3)		
		< RESISTOR >			
R5501	1-216-853-11	METAL CHIP	470K	5%	1/16W
R5503	1-218-895-11	METAL CHIP	100K	0.5%	1/16W
R5504	1-216-845-11	METAL CHIP	100K	5%	1/16W
R5505	1-216-835-11	METAL CHIP	15K	5%	1/16W
R5506	1-216-826-11	METAL CHIP	2.7K	5%	1/16W
R5507	1-216-841-11	METAL CHIP	47K	5%	1/16W
R5508	1-216-843-11	METAL CHIP	68K	5%	1/16W
R5509	1-216-837-11	METAL CHIP	22K	5%	1/16W
R5510	1-216-843-11	METAL CHIP	68K	5%	1/16W
R5511	1-216-857-11	METAL CHIP	1M	5%	1/16W
R5512	1-216-845-11	METAL CHIP	100K	5%	1/16W
R5514	1-216-864-11	METAL CHIP	0	5%	1/16W
R5516	1-216-833-91	RES-CHIP	10K	5%	1/16W
R5517	1-216-849-11	METAL CHIP	220K	5%	1/16W
R5518	1-216-864-11	METAL CHIP	0	5%	1/16W
R5519	1-216-864-11	METAL CHIP	0	5%	1/16W
R5520	1-216-864-11	METAL CHIP	0	5%	1/16W
R5522	1-216-864-11	METAL CHIP	0	5%	1/16W
R5523	1-216-809-11	METAL CHIP	100	5%	1/16W
R5524	1-216-809-11	METAL CHIP	100	5%	1/16W
R5525	1-216-809-11	METAL CHIP	100	5%	1/16W
R5551	1-216-841-11	METAL CHIP	47K	5%	1/16W
R5553	1-216-823-11	METAL CHIP	1.5K	5%	1/16W
R5557	1-216-864-11	METAL CHIP	0	5%	1/16W
R5559	1-216-864-11	METAL CHIP	0	5%	1/16W
R5560	1-216-853-11	METAL CHIP	470K	5%	1/16W
R5566	1-216-864-11	METAL CHIP	0	5%	1/16W
R5567	1-216-864-11	METAL CHIP	0	5%	1/16W
R5568	1-216-864-11	METAL CHIP	0	5%	1/16W
R5608	1-216-864-11	METAL CHIP	0	5%	1/16W
R5609	1-216-833-91	RES-CHIP	10K	5%	1/16W
R5610	1-216-055-00	METAL CHIP	1.8K	5%	1/10W
R5611	1-216-845-11	METAL CHIP	100K	5%	1/16W
R5612	1-216-834-11	METAL CHIP	12K	5%	1/16W
R5613	1-216-055-00	METAL CHIP	1.8K	5%	1/10W
R5614	1-216-833-91	RES-CHIP	10K	5%	1/16W

The components identified by mark ⚠ or dotted line with mark ⚠ are critical for safety. Replace only with part number specified.	Les composants identifiés par une marque ⚠ sont critiques pour la sécurité. Ne les remplacer que par une pièce portant le numéro spécifié.

Ref. No.	Part No.	Description			Remark
R5616	1-216-810-11	METAL CHIP	120	5%	1/16W
R5617	1-216-837-11	METAL CHIP	22K	5%	1/16W
R5618	1-216-817-11	METAL CHIP	470	5%	1/16W
R5702	1-216-822-11	METAL CHIP	1.2K	5%	1/16W
R5704	1-216-823-11	METAL CHIP	1.5K	5%	1/16W
R5706	1-216-825-11	METAL CHIP	2.2K	5%	1/16W
R5707	1-216-828-11	METAL CHIP	3.9K	5%	1/16W
R5708	1-216-832-11	METAL CHIP	8.2K	5%	1/16W
R5711	1-216-864-11	METAL CHIP	0	5%	1/16W
R5712	1-216-855-11	METAL CHIP	680K	5%	1/16W
R5714	1-216-864-11	METAL CHIP	0	5%	1/16W
		< SWITCH >			
S5701	1-692-088-41	SWITCH, TACTILE (LCD BRIGHT +)			
S5702	1-692-088-41	SWITCH, TACTILE (LCD BRIGHT -)			
S5703	1-692-088-41	SWITCH, TACTILE (VOLUME +)			
S5704	1-692-088-41	SWITCH, TACTILE (VOLUME -)			
		< TRANSFORMER >			
⚠T5601	1-435-226-11	TRANSFORMER, INVERTER			
	A-7074-269-A	SE-104 BOARD, COMPLETE (TRV120/TRV120P)			
	A-7074-278-A	SE-104 BOARD, COMPLETE (TRV120E/TRV125E)			
	A-7074-285-A	SE-113 BOARD, COMPLETE (TR8000E/TR8100E)			
		********** (Ref. No.: 20, 000 Series)			
		< CAPACITOR >			
C201	1-164-004-11	CERAMIC CHIP	0.1uF	10%	25V
C202	1-164-004-11	CERAMIC CHIP	0.1uF	10%	25V
C203	1-104-847-11	TANTALUM CHIP	22uF	20%	4V
C204	1-104-847-11	TANTALUM CHIP	22uF	20%	4V
C207	1-164-343-11	CERAMIC CHIP	0.056uF	10%	25V
C208	1-164-343-11	CERAMIC CHIP	0.056uF	10%	25V
C209	1-164-343-11	CERAMIC CHIP	0.056uF	10%	25V
C210	1-110-666-11	ELECT CHIP	22uF	20%	6.3V
C211	1-164-343-11	CERAMIC CHIP	0.056uF	10%	25V
C212	1-110-666-11	ELECT CHIP	22uF	20%	6.3V
C214	1-110-501-11	CERAMIC CHIP	0.33uF	10%	16V
C220	1-135-259-11	TANTALUM CHIP	10uF	20%	6.3V
C221	1-162-970-11	CERAMIC CHIP	0.01uF	10%	25V
C223	1-803-974-21	VARISTOR, CHIP (Note)			
C225	1-803-974-21	VARISTOR, CHIP (Note)			
C226	1-803-974-21	VARISTOR, CHIP (Note)			
		< CONNECTOR >			
CN201	1-779-369-11	CONNECTOR, SQUARE TYPE (INDI) 4P (DV IN/OUT) (TRV120/TRV120E: E, HK, AUS, CN, JE/TRV120P)			
CN201	1-779-369-11	CONNECTOR, SQUARE TYPE (INDI) 4P (DV OUT) (TRV120E: AEP, UK, EE, NE, RU/ TRV125E/TR8000E/TR8100E)			
CN202	1-573-368-11	CONNECTOR, FFC/FPC 28P			

Ref. No.	Part No.	Description			Remark
		< DIODE >			
D211	8-719-069-59	DIODE UDZS-TE17-8.2B			
D212	8-719-069-59	DIODE UDZS-TE17-8.2B			
		< IC >			
IC201	8-759-489-19	IC NJM3230V (TE2)			
		< JACK >			
J201	1-694-651-11	TERMINAL BOARD (S VIDEO ID-2) (AUDIO/VIDEO ID-2)			
J202	1-793-995-11	JACK, SUPER SMALL TYPE (LANC)			
		< COIL >			
L201	1-469-525-91	INDUCTOR	10uH		
		< RESISTOR >			
R201	1-216-837-11	METAL CHIP	22K	5%	1/16W
R202	1-216-837-11	METAL CHIP	22K	5%	1/16W
R203	1-216-837-11	METAL CHIP	22K	5%	1/16W
R204	1-216-837-11	METAL CHIP	22K	5%	1/16W
R205	1-216-864-11	METAL CHIP	0	5%	1/16W
R206	1-216-857-11	METAL CHIP	1M	5%	1/16W
R207	1-216-833-91	RES-CHIP	10K	5%	1/16W
R208	1-216-833-91	RES-CHIP	10K	5%	1/16W
R209	1-216-857-11	METAL CHIP	1M	5%	1/16W
R211	1-216-835-11	METAL CHIP	15K	5%	1/16W
R212	1-216-864-11	METAL CHIP	0	5%	1/16W
R213	1-216-864-11	METAL CHIP	0	5%	1/16W
R214	1-216-864-11	METAL CHIP	0	5%	1/16W
R215	1-216-295-91	SHORT	0		
R217	1-216-295-91	SHORT	0		
R218	1-216-864-11	METAL CHIP	0	5%	1/16W
R219	1-216-864-11	METAL CHIP	0	5%	1/16W
R220	1-216-864-11	METAL CHIP	0	5%	1/16W
R224	1-216-864-11	METAL CHIP	0	5%	1/16W
R225	1-216-864-11	METAL CHIP	0	5%	1/16W
R226	1-216-864-11	METAL CHIP	0	5%	1/16W
		< SENSOR >			
SE201	1-803-042-31	SENSOR, ANGULAR VELOCITY (PITCH SENSOR) (TRV120/TRV120P)			
SE201	1-418-252-11	SENSOR, ANGULAR VELOCITY (PITCH SENSOR) (TRV120E/TRV125E/ TR8000E/TR8100E)			
SE202	1-803-042-41	SENSOR, ANGULAR VELOCITY (YAW SENSOR) (TRV120/TRV120P)			
SE202	1-418-252-21	SENSOR, ANGULAR VELOCITY (YAW SENSOR) (TRV120E/TRV125E/TR8000E/TR8100E)			
		< VARISTOR >			
VDR001	1-801-923-11	VARISTOR, CHIP			

Note: Varistors are mounted to the location where C223, C225 and C226 are printed

The components identified by mark ⚠ or dotted line with mark ⚠ are critical for safety. Replace only with part number specified.

Les composants identifiés par une marque ⚠ sont critiques pour la sécurité.
Ne les remplacer que par une pièce portant le numéro spécifié.

VC-235

Ref. No.	Part No.	Description			Remark
	A-7094-782-A	VC-235 BOARD, COMPLETE (SERVICE)			(TRV120/TRV120P)
	A-7094-783-A	VC-235 BOARD, COMPLETE (SERVICE)			(TRV120E/TRV125E)
	A-7094-784-A	VC-235 BOARD, COMPLETE (SERVICE)			(TR8000E/TR8100E)
		**********			
					(Ref. No.: 10, 000 Series)
		< CAPACITOR >			
C1101	1-107-826-91	CERAMIC CHIP	0.1uF	10%	16V (Note 1)
C1301	1-164-933-11	CERAMIC CHIP	220PF	10%	16V
C1302	1-107-826-91	CERAMIC CHIP	0.1uF	10%	16V
C1303	1-107-826-91	CERAMIC CHIP	0.1uF	10%	16V
C1304	1-107-826-91	CERAMIC CHIP	0.1uF	10%	16V
C1305	1-165-176-11	CERAMIC CHIP	0.047uF	10%	16V
C1306	1-164-943-11	CERAMIC CHIP	0.01uF	10%	16V
C1307	1-164-940-11	CERAMIC CHIP	0.0033uF	10%	16V
C1308	1-164-939-11	CERAMIC CHIP	0.0022uF	10%	16V
C1309	1-164-935-11	CERAMIC CHIP	470PF	10%	16V
C1310	1-164-941-11	CERAMIC CHIP	0.0047uF	10%	16V
C1311	1-164-938-11	CERAMIC CHIP	0.0015uF	10%	16V
C1312	1-164-939-11	CERAMIC CHIP	0.0022uF	10%	16V
C1313	1-164-937-11	CERAMIC CHIP	0.001uF	10%	16V
C1314	1-164-935-11	CERAMIC CHIP	470PF	10%	16V
C1315	1-164-937-11	CERAMIC CHIP	0.001uF	10%	16V
C1316	1-164-937-11	CERAMIC CHIP	0.001uF	10%	16V
C1317	1-164-937-11	CERAMIC CHIP	0.001uF	10%	16V
C1318	1-164-937-11	CERAMIC CHIP	0.001uF	10%	16V
C1319	1-164-937-11	CERAMIC CHIP	0.001uF	10%	16V
C1320	1-135-259-11	TANTALUM CHIP	10uF	20%	6.3V
C1321	1-115-566-11	CERAMIC CHIP	4.7uF	10%	10V
C1322	1-135-201-11	TANTALUM CHIP	10uF	20%	4V
C1323	1-115-566-11	CERAMIC CHIP	4.7uF	10%	10V
C1326	1-115-566-11	CERAMIC CHIP	4.7uF	10%	10V
C1327	1-115-566-11	CERAMIC CHIP	4.7uF	10%	10V
C1328	1-162-974-11	CERAMIC CHIP	0.01uF		50V
C1329	1-115-566-11	CERAMIC CHIP	4.7uF	10%	10V
C1330	1-115-566-11	CERAMIC CHIP	4.7uF	10%	10V
C1331	1-115-566-11	CERAMIC CHIP	4.7uF	10%	10V
C1332	1-115-566-11	CERAMIC CHIP	4.7uF	10%	10V (TRV120/TRV120E/TRV120P/TRV125E)
C1333	1-135-259-11	TANTALUM CHIP	10uF	20%	6.3V
C1334	1-135-157-21	TANTALUM CHIP	10	20%	6.3V
C1335	1-135-259-11	TANTALUM CHIP	10uF	20%	6.3V
C1336	1-119-750-11	TANTALUM CHIP	22uF	20%	6.3V
C1337	1-164-506-11	CERAMIC CHIP	4.7uF		16V
C1338	1-164-506-11	CERAMIC CHIP	4.7uF		16V
C1339	1-135-259-11	TANTALUM CHIP	10uF	20%	6.3V (TRV120/TRV120E/TRV120P/TRV125E)
C1340	1-135-259-11	TANTALUM CHIP	10uF	20%	6.3V
C1341	1-135-259-11	TANTALUM CHIP	10uF	20%	6.3V
C1342	1-165-319-11	CERAMIC CHIP	0.1uF		50V
C1343	1-135-157-21	TANTALUM CHIP	10uF	20%	6.3V
C1344	1-115-566-11	CERAMIC CHIP	4.7uF	10%	10V (TRV120/TRV120E/TRV120P/TRV125E)
C1345	1-135-259-11	TANTALUM CHIP	10uF	20%	6.3V
C1346	1-135-157-21	TANTALUM CHIP	10uF	20%	6.3V
C1347	1-135-216-11	TANTALUM CHIP	10uF	20%	10V (TRV120/TRV120E/TRV120P/TRV125E)
C1348	1-135-157-21	TANTALUM CHIP	10uF	20%	6.3V
C1350	1-113-985-11	TANTALUM CHIP	10uF	20%	20V
C1351	1-164-943-11	CERAMIC CHIP	0.01uF	10%	16V (TRV120/TRV120E/TRV120P/TRV125E)
C1352	1-125-777-11	CERAMIC CHIP	0.1uF	10%	10V
C1353	1-125-777-11	CERAMIC CHIP	0.1uF	10%	10V
C1354	1-113-985-11	TANTALUM CHIP	10uF	20%	20V
C1355	1-164-505-11	CERAMIC CHIP	2.2uF		16V (TRV120/TRV120E/TRV120P/TRV125E)
C1356	1-164-505-11	CERAMIC CHIP	2.2uF		16V (TRV120/TRV120E/TRV120P/TRV125E)
C1357	1-104-851-11	TANTALUM CHIP	10uF	20%	10V
C1359	1-164-506-11	CERAMIC CHIP	4.7uF		16V
C1501	1-164-858-11	CERAMIC CHIP	22PF	5%	16V
C1502	1-164-937-11	CERAMIC CHIP	0.001uF	10%	16V
C1503	1-164-858-11	CERAMIC CHIP	22PF	5%	16V
C1504	1-115-156-11	CERAMIC CHIP	1uF		10V (TRV120/TRV120P) (Note 2)
C1505	1-115-156-11	CERAMIC CHIP	1uF		10V
C1506	1-107-686-11	TANTALUM CHIP	4.7uF	20%	16V
C1507	1-135-201-11	TANTALUM CHIP	10uF	20%	4V
C1508	1-125-837-91	CERAMIC CHIP	1uF	10%	6.3V
C1509	1-164-937-11	CERAMIC CHIP	0.001uF	10%	16V
C1511	1-163-021-91	CERAMIC CHIP	0.01uF	10%	50V
C1512	1-164-937-11	CERAMIC CHIP	0.001uF	10%	16V
C1513	1-117-863-11	CERAMIC CHIP	0.47uF	10%	6.3V
C1514	1-162-925-11	CERAMIC CHIP	68PF	5%	50V (TRV120/TRV120P)
C1514	1-162-921-11	CERAMIC CHIP	33PF	5%	50V (TRV120E/TRV125E/TR8000E/TR8100E)
C1515	1-115-467-11	CERAMIC CHIP	0.22uF	10%	10V
C1516	1-109-982-11	CERAMIC CHIP	1uF	10%	10V
C1517	1-162-928-11	CERAMIC CHIP	120PF	5%	50V
C1518	1-125-837-91	CERAMIC CHIP	1uF	10%	6.3V
C1519	1-115-467-11	CERAMIC CHIP	0.22uF	10%	10V
C1520	1-164-937-11	CERAMIC CHIP	0.001uF	10%	16V
C1521	1-125-837-91	CERAMIC CHIP	1uF	10%	6.3V
C1522	1-125-837-91	CERAMIC CHIP	1uF	10%	6.3V
C1523	1-107-826-91	CERAMIC CHIP	0.1uF	10%	16V
C1524	1-104-847-11	TANTALUM CHIP	22uF	20%	4V
C1525	1-125-837-91	CERAMIC CHIP	1uF	10%	6.3V
C1552	1-164-943-11	CERAMIC CHIP	0.01uF	10%	16V
C1554	1-164-941-11	CERAMIC CHIP	0.0047uF	10%	16V
C1556	1-135-201-11	TANTALUM CHIP	10uF	20%	4V
C1558	1-125-777-11	CERAMIC CHIP	0.1uF	10%	10V
C1559	1-107-826-91	CERAMIC CHIP	0.1uF	10%	16V
C1560	1-164-935-11	CERAMIC CHIP	470PF	10%	16V
C1561	1-164-943-11	CERAMIC CHIP	0.01uF	10%	16V
C1562	1-164-489-11	CERAMIC CHIP	0.22uF	10%	16V
C1563	1-125-839-91	TANTALUM CHIP	47uF	20%	6.3V
C1564	1-164-937-11	CERAMIC CHIP	0.001uF	10%	16V
C1565	1-107-823-11	CERAMIC CHIP	0.47uF	10%	16V
C1566	1-164-943-11	CERAMIC CHIP	0.01uF	10%	16V
C1568	1-164-939-11	CERAMIC CHIP	0.0022uF	10%	16V
C1569	1-125-837-91	CERAMIC CHIP	1uF	10%	6.3V
C1570	1-164-943-11	CERAMIC CHIP	0.01uF	10%	16V
C1571	1-135-259-11	TANTALUM CHIP	10uF	20%	6.3V

Note 1: C1101 is mounted on the board with suffix number 12 (22, 32) and 13 (23, 33)

Note 2: C1504 is mounted on the board with suffix number 13 (23, 33)

Ref. No.	Part No.	Description			Remark
C1572	1-125-777-11	CERAMIC CHIP	0.1uF	10%	10V
C2201	1-164-943-11	CERAMIC CHIP	0.01uF	10%	16V
C2202	1-135-259-11	TANTALUM CHIP	10uF	20%	6.3V
C2203	1-164-943-11	CERAMIC CHIP	0.01uF	10%	16V
C2204	1-125-777-11	CERAMIC CHIP	0.1uF	10%	10V
C2208	1-164-392-11	CERAMIC CHIP	390PF	5%	50V
C2210	1-125-837-91	CERAMIC CHIP	1uF	10%	6.3V
C2211	1-119-660-11	TANTALUM CHIP	4.7uF	20%	6.3V
C2212	1-125-837-91	CERAMIC CHIP	1uF	10%	6.3V
C2213	1-164-943-11	CERAMIC CHIP	0.01uF	10%	16V
C2214	1-107-826-91	CERAMIC CHIP	0.1uF	10%	16V
C2215	1-125-837-91	CERAMIC CHIP	1uF	10%	6.3V
C2222	1-107-826-91	CERAMIC CHIP	0.1uF	10%	16V
C2223	1-107-826-91	CERAMIC CHIP	0.1uF	10%	16V
C2224	1-107-826-91	CERAMIC CHIP	0.1uF	10%	16V
C2225	1-164-943-11	CERAMIC CHIP	0.01uF	10%	16V
C2226	1-164-943-11	CERAMIC CHIP	0.01uF	10%	16V
C2227	1-107-823-11	CERAMIC CHIP	0.47uF	10%	16V
C2228	1-135-201-11	TANTALUM CHIP	10uF	20%	4V
C2229	1-164-943-11	CERAMIC CHIP	0.01uF	10%	16V
C2230	1-164-938-11	CERAMIC CHIP	0.0015uF	10%	16V
C2232	1-135-201-11	TANTALUM CHIP	10uF	20%	4V
C2233	1-164-943-11	CERAMIC CHIP	0.01uF	10%	16V
C2234	1-164-943-11	CERAMIC CHIP	0.01uF	10%	16V
C2236	1-107-826-91	CERAMIC CHIP	0.1uF	10%	16V
C2238	1-125-837-91	CERAMIC CHIP	1uF	10%	6.3V
C2240	1-125-837-91	CERAMIC CHIP	1uF	10%	6.3V
C2242	1-115-156-11	CERAMIC CHIP	1uF		10V
C2243	1-125-837-91	CERAMIC CHIP	1uF	10%	6.3V
C2244	1-164-943-11	CERAMIC CHIP	0.01uF	10%	16V
C2247	1-125-837-91	CERAMIC CHIP	1uF	10%	6.3V
C2250	1-135-201-11	TANTALUM CHIP	10uF	20%	4V
C2291	1-164-943-11	CERAMIC CHIP	0.01uF	10%	16V
C2292	1-104-852-11	TANTALUM CHIP	22uF	20%	6.3V
C2293	1-125-837-91	CERAMIC CHIP	1uF	10%	6.3V
C3102	1-164-943-11	CERAMIC CHIP	0.01uF	10%	16V
C3104	1-164-943-11	CERAMIC CHIP	0.01uF	10%	16V
C3105	1-164-943-11	CERAMIC CHIP	0.01uF	10%	16V
C3107	1-164-943-11	CERAMIC CHIP	0.01uF	10%	16V
C3108	1-135-201-11	TANTALUM CHIP	10uF	20%	4V
C3109	1-164-943-11	CERAMIC CHIP	0.01uF	10%	16V
C3110	1-164-943-11	CERAMIC CHIP	0.01uF	10%	16V
C3111	1-135-259-11	TANTALUM CHIP	10uF	20%	6.3V
C3112	1-164-935-11	CERAMIC CHIP	470PF	10%	16V
C3113	1-164-943-11	CERAMIC CHIP	0.01uF	10%	16V
C3114	1-164-866-11	CERAMIC CHIP	47PF	5%	16V
C3115	1-125-777-11	CERAMIC CHIP	0.1uF	10%	10V
C3116	1-164-677-11	CERAMIC CHIP	0.033uF	10%	16V
C3117	1-164-935-11	CERAMIC CHIP	470PF	10%	16V
C3118	1-164-943-11	CERAMIC CHIP	0.01uF	10%	16V
C3119	1-164-866-11	CERAMIC CHIP	47PF	5%	16V
C3120	1-164-943-11	CERAMIC CHIP	0.01uF	10%	16V
C3121	1-164-943-11	CERAMIC CHIP	0.01uF	10%	16V
C3122	1-135-259-11	TANTALUM CHIP	10uF	20%	6.3V
C3123	1-164-942-11	CERAMIC CHIP	0.0068uF	10%	16V
C3124	1-164-942-11	CERAMIC CHIP	0.0068uF	10%	16V
C3126	1-164-943-11	CERAMIC CHIP	0.01uF	10%	16V
C3127	1-164-943-11	CERAMIC CHIP	0.01uF	10%	16V
C3128	1-164-943-11	CERAMIC CHIP	0.01uF	10%	16V
C3131	1-164-943-11	CERAMIC CHIP	0.01uF	10%	16V
C3133	1-164-943-11	CERAMIC CHIP	0.01uF	10%	16V
C3134	1-125-777-11	CERAMIC CHIP	0.1uF	10%	10V
C3135	1-164-874-11	CERAMIC CHIP	100PF	5%	16V
C3136	1-164-872-11	CERAMIC CHIP	82PF	5%	16V
C3137	1-164-943-11	CERAMIC CHIP	0.01uF	10%	16V
C3138	1-164-874-11	CERAMIC CHIP	100PF	5%	16V
C3139	1-164-878-11	CERAMIC CHIP	150PF	5%	16V
C3141	1-164-882-11	CERAMIC CHIP	220PF	5%	16V
C3142	1-164-882-11	CERAMIC CHIP	220PF	5%	16V
C3143	1-164-882-11	CERAMIC CHIP	220PF	5%	16V
C3144	1-164-882-11	CERAMIC CHIP	220PF	5%	16V
C3201	1-164-943-11	CERAMIC CHIP	0.01uF	10%	16V
C3202	1-164-943-11	CERAMIC CHIP	0.01uF	10%	16V
C3203	1-135-259-11	TANTALUM CHIP	10uF	20%	6.3V
C3204	1-164-943-11	CERAMIC CHIP	0.01uF	10%	16V
C3205	1-164-943-11	CERAMIC CHIP	0.01uF	10%	16V
C3206	1-164-943-11	CERAMIC CHIP	0.01uF	10%	16V
C3207	1-164-943-11	CERAMIC CHIP	0.01uF	10%	16V
C3208	1-164-943-11	CERAMIC CHIP	0.01uF	10%	16V
C3210	1-164-941-11	CERAMIC CHIP	0.0047uF	10%	16V
C3211	1-164-943-11	CERAMIC CHIP	0.01uF	10%	16V
C3212	1-164-943-11	CERAMIC CHIP	0.01uF	10%	16V
C3213	1-165-176-11	CERAMIC CHIP	0.047uF	10%	16V
C3214	1-164-943-11	CERAMIC CHIP	0.01uF	10%	16V
C3215	1-164-943-11	CERAMIC CHIP	0.01uF	10%	16V
C3216	1-125-777-11	CERAMIC CHIP	0.1uF	10%	10V
C3217	1-164-943-11	CERAMIC CHIP	0.01uF	10%	16V
C3218	1-164-943-11	CERAMIC CHIP	0.01uF	10%	16V
C3301	1-107-826-91	CERAMIC CHIP	0.1uF	10%	16V
C3302	1-107-826-91	CERAMIC CHIP	0.1uF	10%	16V
C3303	1-107-826-91	CERAMIC CHIP	0.1uF	10%	16V
C3305	1-107-826-91	CERAMIC CHIP	0.1uF	10%	16V
C3306	1-164-943-11	CERAMIC CHIP	0.01uF	10%	16V
C3307	1-164-850-11	CERAMIC CHIP	10PF	0.50PF	16V
C3308	1-164-850-11	CERAMIC CHIP	10PF	0.50PF	16V
C3309	1-164-943-11	CERAMIC CHIP	0.01uF	10%	16V
C3310	1-127-760-91	CERAMIC CHIP	4.7uF	10%	6.3V
C3311	1-164-943-11	CERAMIC CHIP	0.01uF	10%	16V
C3312	1-164-943-11	CERAMIC CHIP	0.01uF	10%	16V
C3313	1-164-937-11	CERAMIC CHIP	0.001uF	10%	16V
C3314	1-164-937-11	CERAMIC CHIP	0.001uF	10%	16V
C3315	1-164-937-11	CERAMIC CHIP	0.001uF	10%	16V
C3316	1-164-937-11	CERAMIC CHIP	0.001uF	10%	16V
C3317	1-164-943-11	CERAMIC CHIP	0.01uF	10%	16V
C3318	1-164-943-11	CERAMIC CHIP	0.01uF	10%	16V
C3319	1-164-937-11	CERAMIC CHIP	0.001uF	10%	16V
C3320	1-135-201-11	TANTALUM CHIP	10uF	20%	4V
C3321	1-164-943-11	CERAMIC CHIP	0.01uF	10%	16V
C3322	1-117-863-11	CERAMIC CHIP	0.47uF	10%	6.3V
C3323	1-164-943-11	CERAMIC CHIP	0.01uF	10%	16V
C3324	1-119-923-81	CERAMIC CHIP	0.047uF	10%	10V
C3325	1-164-937-11	CERAMIC CHIP	0.001uF	10%	16V
C3326	1-125-838-91	CERAMIC CHIP	2.2uF	10%	6.3V
C3327	1-104-847-11	TANTALUM CHIP	22uF	20%	4V
C3328	1-164-943-11	CERAMIC CHIP	0.01uF	10%	16V
C3329	1-164-943-11	CERAMIC CHIP	0.01uF	10%	16V
C3331	1-135-201-11	TANTALUM CHIP	10uF	20%	4V
C3332	1-164-943-11	CERAMIC CHIP	0.01uF	10%	16V
C3333	1-162-970-11	CERAMIC CHIP	0.01uF	10%	25V
C3334	1-164-943-11	CERAMIC CHIP	0.01uF	10%	16V

Ref. No.	Part No.	Description			Remark
C3335	1-125-777-11	CERAMIC CHIP	0.1uF	10%	10V
C3337	1-125-837-91	CERAMIC CHIP	1uF	10%	6.3V
C3338	1-164-882-11	CERAMIC CHIP	220PF	5%	16V
C3342	1-125-837-91	CERAMIC CHIP	1uF	10%	6.3V
C3343	1-127-760-91	CERAMIC CHIP	4.7uF	10%	6.3V
C3345	1-127-760-91	CERAMIC CHIP	4.7uF	10%	6.3V
C3346	1-127-760-91	CERAMIC CHIP	4.7uF	10%	6.3V
C3348	1-127-760-91	CERAMIC CHIP	4.7uF	10%	6.3V
C3349	1-125-837-91	CERAMIC CHIP	1uF	10%	6.3V
C3350	1-125-837-91	CERAMIC CHIP	1uF	10%	6.3V
C3351	1-125-777-11	CERAMIC CHIP	0.1uF	10%	10V
C3601	1-135-201-11	TANTALUM CHIP	10uF	20%	4V
C3603	1-164-943-11	CERAMIC CHIP	0.01uF	10%	16V
C3604	1-135-259-11	TANTALUM CHIP	10uF	20%	6.3V
C3608	1-125-777-11	CERAMIC CHIP	0.1uF	10%	10V
C3610	1-135-201-11	TANTALUM CHIP	10uF	20%	4V
C3611	1-125-837-91	CERAMIC CHIP	1uF	10%	6.3V
C3612	1-125-837-91	CERAMIC CHIP	1uF	10%	6.3V
C3613	1-164-943-11	CERAMIC CHIP	0.01uF	10%	16V
C3614	1-125-837-91	CERAMIC CHIP	1uF	10%	6.3V
C3615	1-164-943-11	CERAMIC CHIP	0.01uF	10%	16V
C3616	1-125-837-91	CERAMIC CHIP	1uF	10%	6.3V
C3617	1-125-837-91	CERAMIC CHIP	1uF	10%	6.3V
C3618	1-125-837-91	CERAMIC CHIP	1uF	10%	6.3V
C3619	1-164-943-11	CERAMIC CHIP	0.01uF	10%	16V
C3620	1-164-943-11	CERAMIC CHIP	0.01uF	10%	16V
C3621	1-164-943-11	CERAMIC CHIP	0.01uF	10%	16V
C3622	1-125-837-91	CERAMIC CHIP	1uF	10%	6.3V
C3626	1-107-826-91	CERAMIC CHIP	0.1uF	10%	16V
C3628	1-164-943-11	CERAMIC CHIP	0.01uF	10%	16V
C3629	1-125-777-11	CERAMIC CHIP	0.1uF	10%	10V
C3630	1-125-777-11	CERAMIC CHIP	0.1uF	10%	10V
C3631	1-125-777-11	CERAMIC CHIP	0.1uF	10%	10V
C3632	1-164-943-11	CERAMIC CHIP	0.01uF	10%	16V
C3633	1-135-259-11	TANTALUM CHIP	10uF	20%	6.3V
C3634	1-125-777-11	CERAMIC CHIP	0.1uF	10%	10V
C3636	1-164-858-11	CERAMIC CHIP	22PF	5%	16V
C3701	1-164-943-11	CERAMIC CHIP	0.01uF	10%	16V
C3704	1-115-467-11	CERAMIC CHIP	0.22uF	10%	10V
C3705	1-110-501-11	CERAMIC CHIP	0.33uF	10%	16V
C3706	1-164-943-11	CERAMIC CHIP	0.01uF	10%	16V
C3707	1-125-837-91	CERAMIC CHIP	1uF	10%	6.3V
C3708	1-125-838-91	CERAMIC CHIP	2.2uF	10%	6.3V
C3709	1-164-677-11	CERAMIC CHIP	0.033uF	10%	16V
C3710	1-125-838-91	CERAMIC CHIP	2.2uF	10%	6.3V
C3711	1-125-838-91	CERAMIC CHIP	2.2uF	10%	6.3V
C3712	1-125-838-91	CERAMIC CHIP	2.2uF	10%	6.3V
C3713	1-125-837-91	CERAMIC CHIP	1uF	10%	6.3V
C3714	1-135-259-11	TANTALUM CHIP	10uF	20%	6.3V
C3715	1-110-501-11	CERAMIC CHIP	0.33uF	10%	16V
C3716	1-164-943-11	CERAMIC CHIP	0.01uF	10%	16V
C3717	1-125-837-91	CERAMIC CHIP	1uF	10%	6.3V
C3718	1-164-943-11	CERAMIC CHIP	0.01uF	10%	16V
C3719	1-164-943-11	CERAMIC CHIP	0.01uF	10%	16V
C3723	1-164-943-11	CERAMIC CHIP	0.01uF	10%	16V
C3724	1-125-777-11	CERAMIC CHIP	0.1uF	10%	10V
C3728	1-125-838-91	CERAMIC CHIP	2.2uF	10%	6.3V
C3729	1-125-838-91	CERAMIC CHIP	2.2uF	10%	6.3V
C3730	1-164-943-11	CERAMIC CHIP	0.01uF	10%	16V
C3731	1-164-943-11	CERAMIC CHIP	0.01uF	10%	16V

Ref. No.	Part No.	Description			Remark
C3732	1-126-246-11	ELECT	220uF	20%	4V
C3733	1-126-246-11	ELECT	220uF	20%	4V
C3734	1-135-259-11	TANTALUM CHIP	10uF	20%	6.3V
C3735	1-162-970-11	CERAMIC CHIP	0.01uF	10%	25V
C4401	1-125-777-11	CERAMIC CHIP	0.1uF	10%	10V
C4402	1-125-777-11	CERAMIC CHIP	0.1uF	10%	10V
C4403	1-125-777-11	CERAMIC CHIP	0.1uF	10%	10V
C4404	1-125-777-11	CERAMIC CHIP	0.1uF	10%	10V
C4405	1-107-819-11	CERAMIC CHIP	0.022uF	10%	16V
C4406	1-107-819-11	CERAMIC CHIP	0.022uF	10%	16V
C4407	1-119-923-81	CERAMIC CHIP	0.047uF	10%	10V
C4408	1-104-912-11	TANTALUM CHIP	3.3uF	10%	6.3V
C4409	1-125-777-11	CERAMIC CHIP	0.1uF	10%	10V
C4410	1-125-777-11	CERAMIC CHIP	0.1uF	10%	10V
C4411	1-125-777-11	CERAMIC CHIP	0.1uF	10%	10V
C4412	1-125-777-11	CERAMIC CHIP	0.1uF	10%	10V
C4413	1-125-777-11	CERAMIC CHIP	0.1uF	10%	10V
C4414	1-164-933-11	CERAMIC CHIP	220PF	10%	16V
C4415	1-164-935-11	CERAMIC CHIP	470PF	10%	16V
C4416	1-125-777-11	CERAMIC CHIP	0.1uF	10%	10V
C4417	1-164-937-11	CERAMIC CHIP	0.001uF	10%	16V
C4418	1-164-935-11	CERAMIC CHIP	470PF	10%	16V
C4419	1-164-937-11	CERAMIC CHIP	0.001uF	10%	16V
C4420	1-125-837-91	CERAMIC CHIP	1uF	10%	6.3V
C4421	1-164-937-11	CERAMIC CHIP	0.001uF	10%	16V
C4424	1-125-777-11	CERAMIC CHIP	0.1uF	10%	10V
C4425	1-107-819-11	CERAMIC CHIP	0.022uF	10%	16V
C4426	1-164-943-11	CERAMIC CHIP	0.01uF	10%	16V
C4427	1-164-943-11	CERAMIC CHIP	0.01uF	10%	16V
C4428	1-119-923-81	CERAMIC CHIP	0.047uF	10%	10V
C4429	1-119-923-81	CERAMIC CHIP	0.047uF	10%	10V
C4430	1-164-505-11	CERAMIC CHIP	2.2uF		16V
C4431	1-125-777-11	CERAMIC CHIP	0.1uF	10%	10V
C4432	1-164-943-11	CERAMIC CHIP	0.01uF	10%	16V
C4433	1-164-937-11	CERAMIC CHIP	0.001uF	10%	16V
C4434	1-164-937-11	CERAMIC CHIP	0.001uF	10%	16V
C4435	1-164-935-11	CERAMIC CHIP	470PF	10%	16V
C4436	1-164-935-11	CERAMIC CHIP	470PF	10%	16V
C4501	1-164-937-11	CERAMIC CHIP	0.001uF	10%	16V
C4504	1-125-837-91	CERAMIC CHIP	1uF	10%	6.3V
C4505	1-164-943-11	CERAMIC CHIP	0.01uF	10%	16V
C4506	1-164-943-11	CERAMIC CHIP	0.01uF	10%	16V
C4507	1-164-943-11	CERAMIC CHIP	0.01uF	10%	16V
C4508	1-164-943-11	CERAMIC CHIP	0.01uF	10%	16V
C4509	1-164-943-11	CERAMIC CHIP	0.01uF	10%	16V
C4510	1-164-943-11	CERAMIC CHIP	0.01uF	10%	16V
C4801	1-115-156-11	CERAMIC CHIP	1uF		10V
			(TRV120/TRV120E/TRV120P/TRV125E)		
C4802	1-125-777-11	CERAMIC CHIP	0.1uF	10%	10V
C4803	1-125-777-11	CERAMIC CHIP	0.1uF	10%	10V
C4804	1-125-777-11	CERAMIC CHIP	0.1uF	10%	10V
C4805	1-104-851-11	TANTALUM CHIP	10uF	20%	10V
C4806	1-119-749-11	TANTALUM CHIP	33uF	20%	4V
C4807	1-125-777-11	CERAMIC CHIP	0.1uF	10%	10V
C4808	1-164-943-11	CERAMIC CHIP	0.01uF	10%	16V
C4809	1-164-943-11	CERAMIC CHIP	0.01uF	10%	16V
C4810	1-164-943-11	CERAMIC CHIP	0.01uF	10%	16V
C4811	1-164-943-11	CERAMIC CHIP	0.01uF	10%	16V
C4812	1-164-943-11	CERAMIC CHIP	0.01uF	10%	16V
C4813	1-164-943-11	CERAMIC CHIP	0.01uF	10%	16V

Ref. No.	Part No.	Description			Remark
C4814	1-164-943-11	CERAMIC CHIP	0.01uF	10%	16V
C4816	1-125-777-11	CERAMIC CHIP	0.1uF	10%	10V
C4817	1-125-777-11	CERAMIC CHIP	0.1uF	10%	10V
C4819	1-107-819-11	CERAMIC CHIP	0.022uF	10%	16V
C4820	1-164-942-11	CERAMIC CHIP	0.0068uF	10%	16V
C4821	1-164-858-11	CERAMIC CHIP	22PF	5%	16V
C4822	1-164-854-11	CERAMIC CHIP	15PF	5%	16V
C4823	1-125-777-11	CERAMIC CHIP	0.1uF	10%	10V
C4824	1-125-777-11	CERAMIC CHIP	0.1uF	10%	10V
C4825	1-125-777-11	CERAMIC CHIP	0.1uF	10%	10V
C4826	1-164-943-11	CERAMIC CHIP	0.01uF	10%	16V
C4902	1-125-837-91	CERAMIC CHIP	1uF	10%	6.3V
C4903	1-164-850-11	CERAMIC CHIP	10PF	0.50PF	16V
C4904	1-164-850-11	CERAMIC CHIP	10PF	0.50PF	16V
C4905	1-164-943-11	CERAMIC CHIP	0.01uF	10%	16V
C4906	1-125-777-11	CERAMIC CHIP	0.1uF	10%	10V
C4907	1-125-777-11	CERAMIC CHIP	0.1uF	10%	10V
C4908	1-164-943-11	CERAMIC CHIP	0.01uF	10%	16V
C4909	1-164-943-11	CERAMIC CHIP	0.01uF	10%	16V
C4910	1-125-777-11	CERAMIC CHIP	0.1uF	10%	10V
C4911	1-125-777-11	CERAMIC CHIP	0.1uF	10%	10V
C5701	1-135-201-11	TANTALUM CHIP	10uF	20%	4V
C5702	1-135-201-11	TANTALUM CHIP	10uF	20%	4V
C5703	1-115-467-11	CERAMIC CHIP	0.22uF	10%	10V
C5704	1-135-259-11	TANTALUM CHIP	10uF	20%	6.3V
C5705	1-104-847-11	TANTALUM CHIP	22uF	20%	4V
C5706	1-135-259-11	TANTALUM CHIP	10uF	20%	6.3V
C5709	1-115-467-11	CERAMIC CHIP	0.22uF	10%	10V
C5710	1-164-943-11	CERAMIC CHIP	0.01uF	10%	16V
C5711	1-110-569-11	TANTALUM CHIP	47uF	20%	6.3V
C5712	1-110-569-11	TANTALUM CHIP	47uF	20%	6.3V
C5713	1-117-863-11	CERAMIC CHIP	0.47uF	10%	6.3V
C5714	1-135-259-11	TANTALUM CHIP	10uF	20%	6.3V
C5715	1-135-180-21	TANTALUM CHIP	3.3uF	20%	6.3V
C5716	1-135-259-11	TANTALUM CHIP	10uF	20%	6.3V
C5717	1-115-467-11	CERAMIC CHIP	0.22uF	10%	10V
C5718	1-115-467-11	CERAMIC CHIP	0.22uF	10%	10V
C5719	1-115-467-11	CERAMIC CHIP	0.22uF	10%	10V
C5720	1-115-467-11	CERAMIC CHIP	0.22uF	10%	10V
C5721	1-164-939-11	CERAMIC CHIP	0.0022uF	10%	16V
C5722	1-115-467-11	CERAMIC CHIP	0.22uF	10%	10V
C5723	1-104-847-11	TANTALUM CHIP	22uF	20%	4V
C5724	1-115-467-11	CERAMIC CHIP	0.22uF	10%	10V
C5725	1-125-837-91	CERAMIC CHIP	1uF	10%	6.3V
C5728	1-125-777-11	CERAMIC CHIP	0.1uF	10%	10V
C5730	1-115-467-11	CERAMIC CHIP	0.22uF	10%	10V
C5731	1-125-837-91	CERAMIC CHIP	1uF	10%	6.3V
C5732	1-125-837-91	CERAMIC CHIP	1uF	10%	6.3V
C5733	1-125-837-91	CERAMIC CHIP	1uF	10%	6.3V
C5734	1-125-837-91	CERAMIC CHIP	1uF	10%	6.3V
C5735	1-125-777-11	CERAMIC CHIP	0.1uF	10%	10V
C5736	1-115-467-11	CERAMIC CHIP	0.22uF	10%	10V
C5737	1-125-837-91	CERAMIC CHIP	1uF	10%	6.3V
C5738	1-125-837-91	CERAMIC CHIP	1uF	10%	6.3V
C5739	1-125-837-91	CERAMIC CHIP	1uF	10%	6.3V
C5740	1-115-467-11	CERAMIC CHIP	0.22uF	10%	10V
C5741	1-115-467-11	CERAMIC CHIP	0.22uF	10%	10V
C5742	1-164-937-11	CERAMIC CHIP	0.001uF	10%	16V
C5743	1-164-937-11	CERAMIC CHIP	0.001uF	10%	16V
C5744	1-164-943-11	CERAMIC CHIP	0.01uF	10%	16V
C5745	1-164-943-11	CERAMIC CHIP	0.01uF	10%	16V
C5746	1-117-863-11	CERAMIC CHIP	0.47uF	10%	6.3V
C5747	1-117-863-11	CERAMIC CHIP	0.47uF	10%	6.3V
C5748	1-164-943-11	CERAMIC CHIP	0.01uF	10%	16V
C5749	1-164-870-11	CERAMIC CHIP	68PF	5%	16V
C5750	1-135-201-11	TANTALUM CHIP	10uF	20%	4V
C5751	1-135-201-11	TANTALUM CHIP	10uF	20%	4V
C5752	1-164-943-11	CERAMIC CHIP	0.01uF	10%	16V
C5753	1-164-943-11	CERAMIC CHIP	0.01uF	10%	16V
C5754	1-115-467-11	CERAMIC CHIP	0.22uF	10%	10V
C5755	1-164-942-11	CERAMIC CHIP	0.0068uF	10%	16V
C5756	1-115-467-11	CERAMIC CHIP	0.22uF	10%	10V
C5757	1-164-942-11	CERAMIC CHIP	0.0068uF	10%	16V
C5758	1-115-467-11	CERAMIC CHIP	0.22uF	10%	10V
C5759	1-115-467-11	CERAMIC CHIP	0.22uF	10%	10V

< CONNECTOR >

CN1101	1-766-340-21	CONNECTOR, FFC/FPC 10P	
CN1103	1-766-358-21	CONNECTOR, FFC/FPC 28P	
CN1105	1-785-760-11	CONNECTOR, FFC/FPC (ZIF) 45P	
CN1107	1-766-342-21	CONNECTOR, FFC/FPC 12P	
CN1108	1-766-350-21	CONNECTOR, FFC/FPC 20P	
CN1109	1-794-059-21	PIN, CONNECTOR (PC BOARD) 8P	(TRV120/TRV120E/TRV120P/TRV125E)
CN1111	1-770-107-21	CONNECTOR, FFC/FPC (ZIF) 32P	
* CN1113	1-766-971-21	CONNECTOR, BOARD TO BOARD 42P	
CN1501	1-779-332-11	CONNECTOR, FFC/FPC 16P	
CN1551	1-750-360-21	CONNECTOR, FFC/FPC (ZIF) 24P	
CN3101	1-766-346-21	CONNECTOR, FFC/FPC 16P	
CN4401	1-766-644-21	CONNECTOR, FFC/FPC 8P	
CN4402	1-766-340-21	CONNECTOR, FFC/FPC 10P	
CN4403	1-766-342-21	CONNECTOR, FFC/FPC 12P	
CN4404	1-766-345-21	CONNECTOR, FFC/FPC 15P	

< DIODE >

D1101	8-719-069-59	DIODE	UDZS-TE17-8.2B
D1102	8-719-062-16	DIODE	01ZA8.2 (TPL3)
D1103	8-719-062-16	DIODE	01ZA8.2 (TPL3)
D1104	8-719-062-16	DIODE	01ZA8.2 (TPL3)
D1301	8-719-027-76	DIODE	1SS357-TPH3
D1302	8-719-027-77	DIODE	MA796-TX
D1305	8-719-027-76	DIODE	1SS357-TPH3
D1306	8-719-027-76	DIODE	1SS357-TPH3
D1501	8-713-103-84	DIODE	1T379-01-T8A
D1551	8-719-073-01	DIODE	MA111- (K8) .S0
D2201	8-719-055-86	DIODE	KV1470TL1-3
D2202	8-719-055-86	DIODE	KV1470TL1-3
D3301	8-719-992-02	DIODE	RB705D-T146
D3302	8-719-055-86	DIODE	KV1470TL1-3
D3303	8-719-992-02	DIODE	RB705D-T146
D3304	8-719-055-86	DIODE	KV1470TL1-3
D4401	8-719-075-12	DIODE	MA3XD21001S0
D4801	8-719-073-01	DIODE	MA111- (K8) .S0
D4802	8-719-073-01	DIODE	MA111- (K8) .S0
D4803	8-719-073-01	DIODE	MA111- (K8) .S0
D4804	8-719-073-01	DIODE	MA111- (K8) .S0

< FERRITE BEAD >

FB1501	1-414-760-21	FERRITE	0uH
FB1502	1-500-284-21	INDUCTOR CHIP	0uH

Ref. No.	Part No.	Description	Remark
FB1503	1-500-284-21	INDUCTOR CHIP 0uH	
FB1504	1-414-760-21	FERRITE 0uH	
FB1505	1-500-284-21	INDUCTOR CHIP 0uH	
FB2202	1-414-760-21	FERRITE 0uH	
FB2203	1-414-760-21	FERRITE 0uH	
FB2204	1-414-760-21	FERRITE 0uH	
FB2205	1-414-760-21	FERRITE 0uH	
FB2291	1-414-760-21	FERRITE 0uH	
FB3303	1-414-760-21	FERRITE 0uH	
FB3304	1-414-760-21	FERRITE 0uH	
FB3307	1-414-760-21	FERRITE 0uH	
FB3601	1-414-760-21	FERRITE 0uH	
FB3701	1-414-760-21	FERRITE 0uH	
FB4501	1-414-760-21	FERRITE 0uH	
FB4801	1-414-760-21	FERRITE 0uH	
FB4901	1-414-760-21	FERRITE 0uH	
		< IC >	
IC1301	8-752-090-20	IC CXA3057R-T6	
IC1302	8-759-652-10	IC TK11119SCL	
IC1303	8-759-650-28	IC RN5RZ59BA-TL	
IC1501	8-752-386-72	IC CXD2444R-T4	
IC1502	8-759-638-69	IC VSP2200Y-2K	
IC1552	8-759-444-87	IC NJM324V (TE2)	
IC1553	8-759-637-96	IC uPD16877MA-6A5-E2	
IC2201	8-759-599-07	IC HG75C012FFL	
IC2202	8-759-058-60	IC TC7SU04FU (TE85R)	
IC2291	8-759-169-02	IC MB88344BPFV-G-BND-ER (TRV120/TRV120P)	
IC2291	8-759-536-93	IC M62371GP-600D (TRV120E/TRV125E/TR8000E/TR8100E)	
IC3101	8-752-086-52	IC CXA2071R-T4	
IC3102	8-759-195-81	IC TC7S86FU (TE85R)	
IC3103	8-752-086-53	IC CXA2072R-T4	
IC3201	8-752-093-69	IC CXA3265R-T4	
IC3202	8-759-075-70	IC TA75S393F-TE85R	
IC3301	8-759-650-74	IC CAIN	
IC3302	8-759-641-50	IC MB90099PFV-G-102-BND-ER	
IC3303	8-759-566-52	IC SN104266PN-TEB	
IC3304	8-759-643-08	IC TK11215BMCL	
IC3603	8-759-653-60	IC MB87L1241PFV-G-BND-ER	
IC3701	8-759-599-37	IC AN2225FHQ-EB	
IC4401	8-759-640-85	IC CXA8096R-TBM	
IC4501	8-759-669-94	IC MB91192PFF-G-109-BND-ER	
IC4502	8-759-593-47	IC AK6417AM-E2 (TRV120/TRV120P)	
IC4502	8-759-640-87	IC BR9016RFV-E2 (TRV120E/TRV125E/TR8000E/TR8100E)	
IC4801	8-759-424-79	IC S-8423YFS-T2	
IC4802	8-759-642-45	IC TL1596CPWR	
IC4803	8-759-641-50	IC S579612PZ-TEB	
IC4901	8-759-445-94	IC AK6480AM-E2	
IC4902	8-759-665-32	IC MB91192PFF-G-108-BND-ER	
IC5701	8-752-093-72	IC CXA3284R-T6	
IC5702	8-759-647-71	IC AK4550VT-E2	
		< COIL >	
L1301	1-416-670-11	INDUCTOR 33uH	
L1302	1-416-669-11	INDUCTOR 22uH	
L1303	1-416-669-11	INDUCTOR 22uH	
L1304	1-416-669-11	INDUCTOR 22uH	
L1305	1-416-669-11	INDUCTOR 22uH	
L1306	1-412-056-11	INDUCTOR 4.7uH	
L1307	1-412-056-11	INDUCTOR 4.7uH	
L1308	1-469-524-91	INDUCTOR 4.7uH	
L1309	1-469-524-91	INDUCTOR 4.7uH	
L1310	1-412-056-11	INDUCTOR 4.7uH	
L1311	1-469-524-91	INDUCTOR 4.7uH	
L1312	1-469-524-91	INDUCTOR 4.7uH	
L1313	1-469-524-91	INDUCTOR 4.7uH	
L1314	1-469-524-91	INDUCTOR 4.7uH	
L1315	1-469-524-91	INDUCTOR 4.7uH (TRV120/TRV120E/TRV120P/TRV125E)	
L1316	1-414-400-11	INDUCTOR 22uH	
L1317	1-416-669-11	INDUCTOR 22uH (TRV120/TRV120E/TRV120P/TRV125E)	
L1318	1-469-524-91	INDUCTOR 4.7uH (TRV120/TRV120E/TRV120P/TRV125E)	
L1320	1-469-526-91	INDUCTOR 22uH (TRV120/TRV120E/TRV120P/TRV125E)	
L1321	1-469-524-91	INDUCTOR 4.7uH	
L1501	1-469-525-91	INDUCTOR 10uH	
L1551	1-469-525-91	INDUCTOR 10uH	
L1552	1-469-525-91	INDUCTOR 10uH	
L1553	1-469-525-91	INDUCTOR 10uH	
L2201	1-469-525-91	INDUCTOR 10uH	
L2202	1-469-525-91	INDUCTOR 10uH	
L2203	1-469-525-91	INDUCTOR 10uH	
L2204	1-469-525-91	INDUCTOR 10uH	
L2207	1-412-945-11	INDUCTOR 3.3uH	
L2208	1-469-525-91	INDUCTOR 10uH	
L2209	1-469-525-91	INDUCTOR 10uH	
L2291	1-469-525-91	INDUCTOR 10uH	
L3102	1-469-525-91	INDUCTOR 10uH	
L3103	1-469-525-91	INDUCTOR 10uH	
L3104	1-469-525-91	INDUCTOR 10uH	
L3105	1-414-406-11	INDUCTOR 220uH	
L3106	1-412-952-11	INDUCTOR 12uH	
L3201	1-469-526-91	INDUCTOR 22uH	
L3303	1-412-936-11	INDUCTOR 0.56uH	
L3304	1-414-246-11	INDUCTOR 1.8uH	
L3305	1-469-525-91	INDUCTOR 10uH	
L3306	1-469-525-91	INDUCTOR 10uH	
L3307	1-469-525-91	INDUCTOR 10uH	
L3601	1-469-525-91	INDUCTOR 10uH	
L3602	1-469-525-91	INDUCTOR 10uH	
L3701	1-469-525-91	INDUCTOR 10uH	
L3705	1-469-525-91	INDUCTOR 10uH	
		< TRANSISTOR >	
Q1101	8-729-042-29	TRANSISTOR RN1104F (TPL3)	
Q1102	8-729-042-29	TRANSISTOR RN1104F (TPL3)	
Q1103	8-729-037-53	TRANSISTOR 2SA1832F-Y/GR (TPL3)	
Q1104	8-729-042-29	TRANSISTOR RN1104F (TPL3)	
Q1301	8-729-043-60	TRANSISTOR CPH6102-TL	
Q1302	8-729-046-98	TRANSISTOR CPH6702-TL	
Q1303	8-729-046-98	TRANSISTOR CPH6702-TL	
Q1304	8-729-046-98	TRANSISTOR CPH6702-TL	
Q1305	8-729-046-98	TRANSISTOR CPH6702-TL	
Q1306	8-729-046-98	TRANSISTOR CPH6702-TL	
Q1307	8-729-044-58	TRANSISTOR SI2304DS-T1	
Q1308	8-729-044-58	TRANSISTOR SI2304DS-T1	

Ref. No.	Part No.	Description	Remark
Q1309	8-729-046-98	TRANSISTOR CPH6702-TL	(TRV120/TRV120E/TRV120P/TRV125E)
Q1310	8-729-037-52	TRANSISTOR 2SC4738F-Y/GR (TPL3)	
Q1311	8-729-017-61	TRANSISTOR 2SB1581-T1	
Q1312	8-729-037-53	TRANSISTOR 2SA1832F-Y/GR (TPL3)	
Q1313	8-729-037-52	TRANSISTOR 2SC4738F-Y/GR (TPL3)	
Q1314	8-729-042-29	TRANSISTOR RN1104F (TPL3)	
Q1315	8-729-037-53	TRANSISTOR 2SA1832F-Y/GR (TPL3)	
Q1316	8-729-037-52	TRANSISTOR 2SC4738F-Y/GR (TPL3)	
Q1317	8-729-037-74	TRANSISTOR UN9213J- (K8).SO	(TRV120/TRV120E/TRV120P/TRV125E)
Q1318	8-729-037-53	TRANSISTOR 2SA1832F-Y/GR (TPL3)	
Q1319	8-729-041-23	TRANSISTOR MGSF1P02LT1	(TRV120/TRV120E/TRV120P/TRV125E)
Q1320	8-729-037-52	TRANSISTOR 2SC4738F-Y/GR (TPL3)	
Q1321	8-729-037-52	TRANSISTOR 2SC4738F-Y/GR (TPL3)	
Q1322	8-729-037-53	TRANSISTOR 2SA1832F-Y/GR (TPL3)	(TRV120/TRV120E/TRV120P/TRV125E)
Q1323	8-729-037-53	TRANSISTOR 2SA1832F-Y/GR (TPL3)	
Q1324	8-729-037-52	TRANSISTOR 2SC4738F-Y/GR (TPL3)	(TRV120/TRV120E/TRV120P/TRV125E)
Q1325	8-729-037-52	TRANSISTOR 2SC4738F-Y/GR (TPL3)	
Q1326	8-729-037-53	TRANSISTOR 2SA1832F-Y/GR (TPL3)	(TRV120/TRV120E/TRV120P/TRV125E)
Q1551	8-729-037-52	TRANSISTOR 2SC4738F-Y/GR (TPL3)	
Q1552	8-729-037-53	TRANSISTOR 2SA1832F-Y/GR (TPL3)	
Q1553	8-729-037-53	TRANSISTOR 2SA1832F-Y/GR (TPL3)	
Q1554	8-729-037-52	TRANSISTOR 2SC4738F-Y/GR (TPL3)	
Q2204	8-729-037-53	TRANSISTOR 2SA1832F-Y/GR (TPL3)	
Q2206	8-729-037-52	TRANSISTOR 2SC4738F-Y/GR (TPL3)	
Q3102	8-729-037-53	TRANSISTOR 2SA1832F-Y/GR (TPL3)	
Q3103	8-729-042-29	TRANSISTOR RN1104F (TPL3)	
Q3104	8-729-037-52	TRANSISTOR 2SC4738F-Y/GR (TPL3)	
Q3105	8-729-042-29	TRANSISTOR RN1104F (TPL3)	
Q3106	8-729-042-29	TRANSISTOR RN1104F (TPL3)	
Q3107	8-729-037-52	TRANSISTOR 2SC4738F-Y/GR (TPL3)	
Q3108	8-729-037-53	TRANSISTOR 2SA1832F-Y/GR (TPL3)	
Q3109	8-729-042-58	TRANSISTOR RN2102F (TPL3)	
Q3110	8-729-042-58	TRANSISTOR RN2102F (TPL3)	
Q3111	8-729-037-53	TRANSISTOR 2SA1832F-Y/GR (TPL3)	
Q3112	8-729-037-52	TRANSISTOR 2SC4738F-Y/GR (TPL3)	
Q3113	8-729-037-52	TRANSISTOR 2SC4738F-Y/GR (TPL3)	
Q3114	8-729-037-52	TRANSISTOR 2SC4738F-Y/GR (TPL3)	
Q3115	8-729-037-52	TRANSISTOR 2SC4738F-Y/GR (TPL3)	
Q3116	8-729-047-19	TRANSISTOR 2SA1965-S-TL	
Q3201	8-729-042-29	TRANSISTOR RN1104F (TPL3)	
Q3302	8-729-037-53	TRANSISTOR 2SA1832F-Y/GR (TPL3)	(TRV120/TRV120E/TRV120P/TRV125E)
Q3304	8-729-037-53	TRANSISTOR 2SA1832F-Y/GR (TPL3	(TRV120/TRV120E/TRV120P/TRV125E)
Q3305	8-729-037-53	TRANSISTOR 2SA1832F-Y/GR (TPL3)	
Q3306	8-729-037-53	TRANSISTOR 2SA1832F-Y/GR (TPL3)	(TRV120/TRV120E/TRV120P/TRV125E)
Q3307	8-729-037-53	TRANSISTOR 2SA1832F-Y/GR (TPL3)	
Q3308	8-729-037-53	TRANSISTOR 2SA1832F-Y/GR (TPL3)	
Q3602	8-729-037-53	TRANSISTOR 2SA1832F-Y/GR (TPL3)	
Q3603	8-729-037-52	TRANSISTOR 2SC4738F-Y/GR (TPL3)	
Q3604	8-729-807-86	TRANSISTOR 2SB1295-UL5/6-TB	
Q3605	8-729-042-29	TRANSISTOR RN1104F (TPL3)	
Q3606	8-729-037-53	TRANSISTOR 2SA1832F-Y/GR (TPL3)	
Q3701	8-729-037-52	TRANSISTOR 2SC4738F-Y/GR (TPL3)	
Q4401	8-729-037-52	TRANSISTOR 2SC4738F-Y/GR (TPL3)	
Q4402	8-729-042-29	TRANSISTOR RN1104F (TPL3)	
Q4801	8-729-037-52	TRANSISTOR 2SC4738F-Y/GR (TPL3)	(TRV120/TRV120E/TRV120P/TRV125E)
Q4802	8-729-037-52	TRANSISTOR 2SC4738F-Y/GR (TPL3)	
Q4803	8-729-042-29	TRANSISTOR RN1104F (TPL3)	
Q4804	8-729-041-43	TRANSISTOR HN1L02FU (TE85R)	
Q4805	8-729-042-29	TRANSISTOR RN1104F (TPL3)	
Q4806	8-729-042-58	TRANSISTOR RN2102F (TPL3)	
Q4901	8-729-045-71	TRANSISTOR RN1102F (TPL3)	
Q5701	8-729-045-78	TRANSISTOR RN1110F (TPL3)	
Q5703	8-729-045-78	TRANSISTOR RN1110F (TPL3)	
Q5704	8-729-045-78	TRANSISTOR RN1110F (TPL3)	
Q5706	8-729-045-78	TRANSISTOR RN1110F (TPL3)	
Q5708	8-729-037-63	TRANSISTOR RN2111F (TPL3)	
Q5714	8-729-037-52	TRANSISTOR 2SC4738F-Y/GR (TPL3)	
Q5715	8-729-037-52	TRANSISTOR 2SC4738F-Y/GR (TPL3)	

< RESISTOR >

R1101	1-218-990-11	SHORT	0			
R1105	1-218-990-11	SHORT	0			
R1106	1-218-990-11	SHORT	0			
R1107	1-218-990-11	SHORT	0			
R1108	1-218-990-11	SHORT	0			
R1109	1-218-990-11	SHORT	0			
R1110	1-218-990-11	SHORT	0			
R1111	1-218-990-11	SHORT	0			
R1112	1-218-990-11	SHORT	0			
R1113	1-218-990-11	SHORT	0			
R1114	1-218-990-11	SHORT	0			
R1115	1-218-990-11	SHORT	0			
R1116	1-218-990-11	SHORT	0			
R1117	1-218-990-11	SHORT	0			
R1118	1-218-990-11	SHORT	0			
R1119	1-218-990-11	SHORT	0			
R1120	1-218-990-11	SHORT	0			
R1121	1-218-990-11	SHORT	0			
R1122	1-218-990-11	SHORT	0			
R1123	1-218-990-11	SHORT	0			
R1124	1-218-990-11	SHORT	0			(TRV120/TRV120E/TRV120P/TRV125E)
R1125	1-218-990-11	SHORT	0			(TR8000E/TR8100E)
R1127	1-218-974-11	RES-CHIP	56K	5%	1/16W	(TRV120/TRV120P)
R1127	1-218-965-11	RES-CHIP	10K	5%	1/16W	(TRV120E/TRV125E/TR8000E/TR8100E)
R1128	1-218-975-11	RES-CHIP	68K	5%	1/16W	(TRV120/TRV120P)
R1128	1-218-977-11	RES-CHIP	100K	5%	1/16W	(TRV120E/TRV125E/TR8000E/TR8100E)
R1129	1-218-953-11	RES-CHIP	1K	5%	1/16W	
R1130	1-218-990-11	SHORT	0			
R1131	1-218-973-11	RES-CHIP	47K	5%	1/16W	(TRV120/TRV120P)
R1131	1-218-974-11	RES-CHIP	56K	5%	1/16W	(TRV120E/TRV125E)
R1131	1-218-969-11	RES-CHIP	22K	5%	1/16W	(TR8000E/TR8100E)
R1132	1-218-977-11	RES-CHIP	100K	5%	1/16W	(TRV120/TRV120P/TR8000E/TR8100E)
R1132	1-218-975-11	RES-CHIP	68K	5%	1/16W	(TRV120E/TRV125E)

Ref. No.	Part No.	Description			Remark
R1134	1-218-990-11	SHORT	0		
R1137	1-218-953-11	RES-CHIP	1K	5%	1/16W
R1141	1-216-295-91	SHORT	0		
R1142	1-218-953-11	RES-CHIP	1K	5%	1/16W
R1143	1-218-953-11	RES-CHIP	1K	5%	1/16W
R1144	1-218-961-11	RES-CHIP	4.7K	5%	1/16W
R1145	1-218-990-11	SHORT	0		
R1146	1-218-951-11	RES-CHIP	680	5%	1/16W
R1147	1-218-973-11	RES-CHIP	47K	5%	1/16W
R1301	1-218-969-11	RES-CHIP	22K	5%	1/16W
R1302	1-218-971-11	RES-CHIP	33K	5%	1/16W
R1303	1-218-974-11	METAL CHIP	56K	0.5%	1/16W
R1304	1-218-971-11	RES-CHIP	33K	5%	1/16W (TRV120/TRV120E/TRV120P/TRV125E)
R1305	1-218-990-11	SHORT	0		
R1306	1-218-969-11	RES-CHIP	22K	5%	1/16W
R1307	1-218-990-11	SHORT	0		
R1308	1-218-990-11	SHORT	0		
R1309	1-218-965-11	RES-CHIP	10K	5%	1/16W
R1310	1-218-990-11	SHORT	0		
R1311	1-218-971-11	RES-CHIP	33K	5%	1/16W
R1312	1-218-961-11	RES-CHIP	4.7K	5%	1/16W
R1313	1-218-969-11	RES-CHIP	22K	5%	1/16W
R1314	1-218-969-11	RES-CHIP	22K	5%	1/16W
R1315	1-218-990-11	SHORT	0		
R1316	1-216-864-11	METAL CHIP	0	5%	1/16W
R1317	1-218-973-11	RES-CHIP	47K	5%	1/16W
R1318	1-218-961-11	RES-CHIP	4.7K	5%	1/16W
R1319	1-218-973-11	RES-CHIP	47K	5%	1/16W
R1320	1-218-969-11	RES-CHIP	22K	5%	1/16W
R1321	1-208-715-11	METAL CHIP	22K	0.5%	1/16W
R1322	1-208-707-11	METAL CHIP	10K	0.5%	1/16W
R1323	1-218-977-11	RES-CHIP	100K	5%	1/16W
R1324	1-216-295-91	SHORT	0		(TR8000E/TR8100E)
R1325	1-216-295-91	SHORT	0		(TR8000E/TR8100E)
R1326	1-218-965-11	RES-CHIP	10K	5%	1/16W (TRV120/TRV120E/TRV120P/TRV125E)
R1327	1-218-969-11	RES-CHIP	22K	5%	1/16W
R1328	1-218-989-11	RES-CHIP	1M	5%	1/16W (TRV120/TRV120E/TRV120P/TRV125E)
R1329	1-218-989-11	RES-CHIP	1M	5%	1/16W (TRV120/TRV120E/TRV120P/TRV125E)
R1330	1-208-935-11	METAL CHIP	100K	0.5%	1/16W
R1331	1-218-968-11	RES-CHIP	18K	5%	1/16W
R1332	1-208-943-11	METAL CHIP	220K	0.5%	1/16W
R1333	1-218-973-11	RES-CHIP	47K	5%	1/16W
R1334	1-218-977-11	RES-CHIP	100K	5%	1/16W
R1335	1-218-977-11	RES-CHIP	100K	5%	1/16W (TRV120/TRV120E/TRV120P/TRV125E)
R1336	1-218-969-11	RES-CHIP	22K	5%	1/16W
R1337	1-218-977-11	RES-CHIP	100K	5%	1/16W (TRV120/TRV120E/TRV120P/TRV125E)
R1338	1-208-935-11	METAL CHIP	100K	0.5%	1/16W
R1339	1-208-927-11	METAL CHIP	47K	0.5%	1/16W
R1340	1-218-967-11	RES-CHIP	15K	5%	1/16W
R1341	1-218-961-11	RES-CHIP	4.7K	5%	1/16W (TRV120/TRV120E/TRV120P/TRV125E)
R1342	1-208-943-11	METAL CHIP	220K	0.5%	1/16W (TRV120/TRV120E/TRV120P/TRV125E)
R1343	1-208-931-11	METAL CHIP	68K	0.5%	1/16W (TRV120/TRV120E/TRV120P/TRV125E)
R1345	1-218-990-11	SHORT	0		
R1347	1-208-715-11	METAL CHIP	22K	0.5%	1/16W
R1348	1-208-707-11	METAL CHIP	10K	0.5%	1/16W
R1501	1-216-864-11	METAL CHIP	0	5%	1/16W
R1502	1-216-864-11	METAL CHIP	0	5%	1/16W
R1503	1-218-977-11	RES-CHIP	100K	5%	1/16W
R1504	1-218-941-11	RES-CHIP	100	5%	1/16W
R1505	1-218-941-11	RES-CHIP	100	5%	1/16W
R1506	1-218-941-11	RES-CHIP	100	5%	1/16W
R1511	1-218-990-11	SHORT	0		
R1512	1-218-985-11	RES-CHIP	470K	5%	1/16W
R1514	1-218-990-11	SHORT	0		
R1520	1-218-990-11	SHORT	0		
R1551	1-218-973-11	RES-CHIP	47K	5%	1/16W
R1552	1-218-953-11	RES-CHIP	1K	5%	1/16W
R1553	1-216-295-91	SHORT	0		
R1555	1-218-975-11	RES-CHIP	68K	5%	1/16W
R1556	1-218-953-11	RES-CHIP	1K	5%	1/16W
R1557	1-218-975-11	RES-CHIP	68K	5%	1/16W
R1558	1-218-961-11	RES-CHIP	4.7K	5%	1/16W
R1559	1-218-961-11	RES-CHIP	4.7K	5%	1/16W
R1560	1-218-929-11	RES-CHIP	10	5%	1/16W
R1561	1-218-989-11	RES-CHIP	1M	5%	1/16W
R1562	1-218-957-11	RES-CHIP	2.2K	5%	1/16W
R1563	1-218-965-11	RES-CHIP	10K	5%	1/16W
R1564	1-218-981-11	RES-CHIP	220K	5%	1/16W
R1565	1-218-985-11	RES-CHIP	470K	5%	1/16W
R1566	1-218-985-11	RES-CHIP	470K	5%	1/16W
R1567	1-218-957-11	RES-CHIP	2.2K	5%	1/16W
R1568	1-218-967-11	RES-CHIP	15K	5%	1/16W
R1569	1-218-969-11	RES-CHIP	22K	5%	1/16W
R1570	1-218-985-11	RES-CHIP	470K	5%	1/16W
R1571	1-218-953-11	RES-CHIP	1K	5%	1/16W
R1572	1-218-953-11	RES-CHIP	1K	5%	1/16W
R1573	1-218-947-11	RES-CHIP	330	5%	1/16W
R1574	1-218-969-11	RES-CHIP	22K	5%	1/16W
R1575	1-218-953-11	RES-CHIP	1K	5%	1/16W
R1576	1-218-965-11	RES-CHIP	10K	5%	1/16W
R1577	1-218-973-11	RES-CHIP	47K	5%	1/16W
R2205	1-218-965-11	RES-CHIP	10K	5%	1/16W
R2206	1-218-977-11	RES-CHIP	100K	5%	1/16W
R2208	1-218-990-11	SHORT	0		
R2209	1-218-965-11	RES-CHIP	10K	5%	1/16W
R2210	1-218-954-11	RES-CHIP	1.2K	5%	1/16W
R2211	1-218-990-11	SHORT	0		
R2213	1-218-962-11	RES-CHIP	5.6K	5%	1/16W
R2215	1-218-953-11	RES-CHIP	1K	5%	1/16W
R2216	1-218-963-11	RES-CHIP	6.8K	5%	1/16W
R2218	1-218-949-11	RES-CHIP	470	5%	1/16W
R2219	1-218-941-11	RES-CHIP	100	5%	1/16W
R2220	1-218-972-11	RES-CHIP	39K	5%	1/16W
R2221	1-218-952-11	RES-CHIP	820	5%	1/16W
R2222	1-218-959-11	RES-CHIP	3.3K	5%	1/16W
R2223	1-218-964-11	RES-CHIP	8.2K	5%	1/16W
R2224	1-218-966-11	RES-CHIP	12K	5%	1/16W
R2225	1-218-949-11	RES-CHIP	470	5%	1/16W
R2230	1-218-990-11	SHORT	0		
R2240	1-218-989-11	RES-CHIP	1M	5%	1/16W

Ref. No.	Part No.	Description			Remark
R2242	1-218-967-11	RES-CHIP	15K	5%	1/16W
R2243	1-218-967-11	RES-CHIP	15K	5%	1/16W
R2244	1-218-966-11	RES-CHIP	12K	5%	1/16W
R2245	1-218-949-11	RES-CHIP	470	5%	1/16W
R2247	1-218-953-11	RES-CHIP	1K	5%	1/16W
R2248	1-218-965-11	RES-CHIP	10K	5%	1/16W
R2254	1-218-990-11	SHORT	0		
R2255	1-218-990-11	SHORT	0		
R2256	1-216-864-11	METAL CHIP	0	5%	1/16W (Note)
R3103	1-218-965-11	RES-CHIP	10K	5%	1/16W
R3104	1-218-963-11	RES-CHIP	6.8K	5%	1/16W
R3105	1-218-990-11	SHORT	0		
R3106	1-218-990-11	SHORT	0		
R3107	1-218-979-11	RES-CHIP	150K	5%	1/16W
R3108	1-218-989-11	RES-CHIP	1M	5%	1/16W
R3109	1-218-966-11	RES-CHIP	12K	5%	1/16W
R3110	1-218-965-11	RES-CHIP	10K	5%	1/16W
R3111	1-218-949-11	RES-CHIP	470	5%	1/16W
R3112	1-218-939-11	RES-CHIP	68	5%	1/16W
R3113	1-218-966-11	RES-CHIP	12K	5%	1/16W
R3114	1-218-961-11	RES-CHIP	4.7K	5%	1/16W
R3115	1-218-965-11	RES-CHIP	10K	5%	1/16W
R3116	1-218-990-11	SHORT	0		
R3117	1-218-969-11	RES-CHIP	22K	5%	1/16W
R3118	1-220-196-11	METAL CHIP	13K	0.5%	1/16W
R3119	1-218-970-11	METAL CHIP	27K	0.5%	1/16W
R3120	1-208-715-11	METAL CHIP	22K	0.5%	1/16W
R3121	1-208-709-11	METAL CHIP	12K	0.5%	1/16W
R3122	1-208-931-11	METAL CHIP	68K	0.5%	1/16W
R3123	1-218-969-11	RES-CHIP	22K	5%	1/16W
R3124	1-218-969-11	RES-CHIP	22K	5%	1/16W
R3125	1-218-945-11	METAL CHIP	220	0.5%	1/16W
R3126	1-218-969-11	RES-CHIP	22K	5%	1/16W
R3127	1-218-971-11	RES-CHIP	33K	5%	1/16W
R3128	1-218-965-11	RES-CHIP	10K	5%	1/16W
R3129	1-218-945-11	METAL CHIP	220	0.5%	1/16W
R3130	1-218-945-11	METAL CHIP	220	0.5%	1/16W
R3131	1-218-945-11	METAL CHIP	220	0.5%	1/16W
R3132	1-218-946-11	RES-CHIP	270	5%	1/16W
R3133	1-218-945-11	RES-CHIP	220	5%	1/16W
R3136	1-218-957-11	RES-CHIP	2.2K	5%	1/16W
R3137	1-218-961-11	RES-CHIP	4.7K	5%	1/16W
R3138	1-218-941-11	RES-CHIP	100	5%	1/16W
R3139	1-218-960-11	RES-CHIP	3.9K	5%	1/16W
R3140	1-218-960-11	RES-CHIP	3.9K	5%	1/16W
R3141	1-218-960-11	RES-CHIP	3.9K	5%	1/16W
R3142	1-218-960-11	RES-CHIP	3.9K	5%	1/16W
R3143	1-218-938-11	RES-CHIP	56	5%	1/16W
R3144	1-218-950-11	RES-CHIP	560	5%	1/16W
R3146	1-216-295-91	SHORT	0		
R3205	1-218-985-11	RES-CHIP	470K	5%	1/16W
R3206	1-218-985-11	RES-CHIP	470K	5%	1/16W
R3210	1-218-965-11	RES-CHIP	10K	5%	1/16W
R3211	1-218-990-11	SHORT	0		
R3212	1-218-986-11	RES-CHIP	560K	5%	1/16W
R3213	1-218-985-11	RES-CHIP	470K	5%	1/16W
R3214	1-218-981-11	RES-CHIP	220K	5%	1/16W

Ref. No.	Part No.	Description			Remark
R3215	1-208-939-11	METAL CHIP	150K	0.5%	1/16W
R3305	1-218-990-11	SHORT	0		
R3308	1-218-990-11	SHORT	0		
R3309	1-218-990-11	SHORT	0		
R3310	1-218-965-11	RES-CHIP	10K	5%	1/16W
R3311	1-218-965-11	RES-CHIP	10K	5%	1/16W
R3312	1-218-946-11	RES-CHIP	270	5%	1/16W
R3313	1-218-990-11	SHORT	0		
R3314	1-218-990-11	SHORT	0		
R3315	1-218-959-11	RES-CHIP	3.3K	5%	1/16W
R3316	1-218-959-11	RES-CHIP	3.3K	5%	1/16W
R3317	1-218-961-11	RES-CHIP	4.7K	5%	1/16W
R3318	1-218-965-11	RES-CHIP	10K	5%	1/16W
R3319	1-218-965-11	RES-CHIP	10K	5%	1/16W
R3320	1-218-957-11	RES-CHIP	2.2K	5%	1/16W
R3321	1-218-965-11	RES-CHIP	10K	5%	1/16W
R3322	1-218-941-11	RES-CHIP	100	5%	1/16W
R3323	1-218-947-11	RES-CHIP	330	5%	1/16W
R3324	1-218-961-11	RES-CHIP	4.7K	5%	1/16W
R3325	1-218-937-11	RES-CHIP	47	5%	1/16W
R3326	1-218-990-11	SHORT	0		
R3328	1-208-886-81	METAL CHIP	910	0.5%	1/16W (TRV120/TRV120E/TRV120P/TRV125E)
R3331	1-218-961-11	RES-CHIP	4.7K	5%	1/16W (TRV120/TRV120E/TRV120P/TRV125E)
R3333	1-218-990-11	SHORT	0		
R3334	1-208-886-81	METAL CHIP	910	0.5%	1/16W (TRV120/TRV120E/TRV120P/TRV125E)
R3336	1-218-961-11	RES-CHIP	4.7K	5%	1/16W (TRV120/TRV120E/TRV120P/TRV125E)
R3337	1-218-990-11	SHORT	0		
R3338	1-218-955-11	RES-CHIP	1.5K	5%	1/16W
R3340	1-208-886-81	METAL CHIP	910	0.5%	1/16W (TRV120/TRV120E/TRV120P/TRV125E)
R3341	1-218-961-11	RES-CHIP	4.7K	5%	1/16W
R3343	1-218-961-11	RES-CHIP	4.7K	5%	1/16W (TRV120/TRV120E/TRV120P/TRV125E)
R3346	1-218-990-11	SHORT	0		
R3349	1-218-990-11	SHORT	0		
R3350	1-218-990-11	SHORT	0		
R3351	1-218-954-11	RES-CHIP	1.2K	5%	1/16W
R3352	1-218-990-11	SHORT	0		
R3356	1-218-957-11	RES-CHIP	2.2K	5%	1/16W
R3358	1-218-945-11	RES-CHIP	220	5%	1/16W
R3360	1-218-957-11	RES-CHIP	2.2K	5%	1/16W
R3361	1-208-709-11	METAL CHIP	12K	0.5%	1/16W
R3362	1-218-990-11	SHORT	0		
R3364	1-208-709-11	METAL CHIP	12K	0.5%	1/16W
R3365	1-218-990-11	SHORT	0		
R3367	1-218-938-11	METAL CHIP	56	0.5%	1/16W
R3368	1-218-938-11	METAL CHIP	56	0.5%	1/16W
R3369	1-208-707-11	METAL CHIP	10K	0.5%	1/16W
R3370	1-218-938-11	METAL CHIP	56	0.5%	1/16W
R3371	1-208-707-11	METAL CHIP	10K	0.5%	1/16W
R3372	1-218-938-11	METAL CHIP	56	0.5%	1/16W
R3375	1-218-965-11	RES-CHIP	10K	5%	1/16W
R3376	1-218-953-11	RES-CHIP	1K	5%	1/16W
R3377	1-218-941-11	RES-CHIP	100	5%	1/16W

Note: R2256 is mounted on the board with suffix number 12 (22, 32) and 13 (23, 33)

VC-235

Ref. No.	Part No.	Description			Remark
R3378	1-218-941-11	RES-CHIP	100	5%	1/16W
R3379	1-218-941-11	RES-CHIP	100	5%	1/16W
R3380	1-218-941-11	RES-CHIP	100	5%	1/16W
R3381	1-218-941-11	RES-CHIP	100	5%	1/16W
R3382	1-218-990-11	SHORT	0		
R3383	1-218-990-11	SHORT	0		
R3385	1-216-864-11	METAL CHIP	0	5%	1/16W
R3386	1-216-864-11	METAL CHIP	0	5%	1/16W
R3604	1-218-990-11	SHORT	0		
R3607	1-218-965-11	RES-CHIP	10K	5%	1/16W
R3609	1-218-990-11	SHORT	0		
R3611	1-218-965-11	RES-CHIP	10K	5%	1/16W
R3612	1-218-973-11	RES-CHIP	47K	5%	1/16W
R3617	1-218-951-11	RES-CHIP	680	5%	1/16W
R3618	1-218-965-11	RES-CHIP	10K	5%	1/16W
R3622	1-218-949-11	RES-CHIP	470	5%	1/16W
R3636	1-218-990-11	SHORT	0		
R3639	1-218-990-11	SHORT	0		
R3643	1-218-990-11	SHORT	0		
R3652	1-218-990-11	SHORT	0		
R3656	1-218-990-11	SHORT	0		
R3657	1-218-977-11	RES-CHIP	100K	5%	1/16W
R3658	1-218-953-11	RES-CHIP	1K	5%	1/16W
R3659	1-218-960-11	RES-CHIP	3.9K	5%	1/16W
R3660	1-218-957-11	RES-CHIP	2.2K	5%	1/16W
R3701	1-218-961-11	RES-CHIP	4.7K	5%	1/16W
R3702	1-218-961-11	RES-CHIP	4.7K	5%	1/16W
R3704	1-218-941-11	RES-CHIP	100	5%	1/16W
R3705	1-218-981-11	RES-CHIP	220K	5%	1/16W
R3712	1-218-936-11	RES-CHIP	39	5%	1/16W
R3713	1-218-935-11	RES-CHIP	33	5%	1/16W
R3714	1-218-936-11	RES-CHIP	39	5%	1/16W
R3715	1-218-935-11	RES-CHIP	33	5%	1/16W
R3716	1-218-936-11	RES-CHIP	39	5%	1/16W
R3717	1-218-935-11	RES-CHIP	33	5%	1/16W
R3721	1-208-715-11	METAL CHIP	22K	0.5%	1/16W
R3722	1-218-953-11	RES-CHIP	1K	5%	1/16W
R3724	1-218-953-11	RES-CHIP	1K	5%	1/16W
R3726	1-218-965-11	RES-CHIP	10K	5%	1/16W
R3727	1-218-953-11	RES-CHIP	1K	5%	1/16W
R3728	1-218-953-11	RES-CHIP	1K	5%	1/16W
R3729	1-218-953-11	RES-CHIP	1K	5%	1/16W
R3730	1-218-953-11	RES-CHIP	1K	5%	1/16W
R3734	1-216-295-91	SHORT	0		
R4401	1-218-973-11	RES-CHIP	47K	5%	1/16W
R4402	1-218-983-11	RES-CHIP	330K	5%	1/16W
R4403	1-218-977-11	RES-CHIP	100K	5%	1/16W
R4404	1-218-977-11	RES-CHIP	100K	5%	1/16W
R4405	1-218-977-11	RES-CHIP	100K	5%	1/16W
R4406	1-218-977-11	RES-CHIP	100K	5%	1/16W
R4407	1-218-949-11	RES-CHIP	470	5%	1/16W
R4408	1-217-671-11	METAL CHIP	1	5%	1/10W
R4409	1-217-671-11	METAL CHIP	1	5%	1/10W
R4410	1-217-671-11	METAL CHIP	1	5%	1/10W
R4411	1-216-023-00	METAL CHIP	82	5%	1/10W
R4413	1-218-990-11	SHORT	0		
R4414	1-218-946-11	RES-CHIP	270	5%	1/16W
R4416	1-218-961-11	RES-CHIP	4.7K	5%	1/16W
R4417	1-208-707-11	METAL CHIP	10K	0.5%	1/16W
R4423	1-218-990-11	SHORT	0		

Ref. No.	Part No.	Description			Remark
R4424	1-218-967-11	RES-CHIP	15K	5%	1/16W
					(TRV120/TRV120P)
R4424	1-218-973-11	RES-CHIP	47K	5%	1/16W
					(TRV120E/TRV125E/TR8000E/TR8100E)
R4425	1-218-959-11	RES-CHIP	3.3K	5%	1/16W
R4426	1-218-977-11	RES-CHIP	100K	5%	1/16W
R4427	1-218-990-11	SHORT	0		
					(TRV120/TRV120P)
R4427	1-218-965-11	RES-CHIP	10K	5%	1/16W
					(TRV120E/TRV125E/TR8000E/TR8100E)
R4428	1-217-671-11	METAL CHIP	1	5%	1/10W
R4429	1-217-671-11	METAL CHIP	1	5%	1/10W
R4430	1-218-985-11	RES-CHIP	470K	5%	1/16W
R4431	1-218-967-11	RES-CHIP	15K	5%	1/16W
					(TRV120/TRV120P)
R4431	1-218-973-11	RES-CHIP	47K	5%	1/16W
					(TRV120E/TRV125E/TR8000E/TR8100E)
R4432	1-218-973-11	RES-CHIP	47K	5%	1/16W
R4434	1-218-965-11	RES-CHIP	10K	5%	1/16W
R4435	1-218-965-11	RES-CHIP	10K	5%	1/16W
R4436	1-218-961-11	RES-CHIP	4.7K	5%	1/16W
R4437	1-218-990-11	SHORT	0		
R4438	1-218-990-11	SHORT	0		
R4442	1-218-990-11	SHORT	0		
R4443	1-218-990-11	SHORT	0		
R4444	1-218-990-11	SHORT	0		
R4445	1-218-990-11	SHORT	0		
R4446	1-218-990-11	SHORT	0		
R4447	1-218-971-11	RES-CHIP	33K	5%	1/16W
R4448	1-218-971-11	RES-CHIP	33K	5%	1/16W
R4502	1-218-977-11	RES-CHIP	100K	5%	1/16W
R4503	1-218-977-11	RES-CHIP	100K	5%	1/16W
R4504	1-218-977-11	RES-CHIP	100K	5%	1/16W
R4505	1-218-977-11	RES-CHIP	100K	5%	1/16W
R4507	1-218-953-11	RES-CHIP	1K	5%	1/16W
R4508	1-218-985-11	RES-CHIP	470K	5%	1/16W
R4511	1-218-953-11	RES-CHIP	1K	5%	1/16W
R4512	1-218-961-11	RES-CHIP	4.7K	5%	1/16W
R4514	1-218-977-11	RES-CHIP	100K	5%	1/16W
R4515	1-218-990-11	SHORT	0		
R4516	1-218-990-11	SHORT	0		
R4517	1-218-990-11	SHORT	0		
R4518	1-218-990-11	SHORT	0		
R4520	1-218-953-11	RES-CHIP	1K	5%	1/16W
R4521	1-218-965-11	RES-CHIP	10K	5%	1/16W
R4522	1-218-965-11	RES-CHIP	10K	5%	1/16W
R4523	1-218-985-11	RES-CHIP	470K	5%	1/16W
R4524	1-218-977-11	RES-CHIP	100K	5%	1/16W
R4525	1-218-977-11	RES-CHIP	100K	5%	1/16W
R4526	1-218-985-11	RES-CHIP	470K	5%	1/16W
R4527	1-218-977-11	RES-CHIP	100K	5%	1/16W
R4528	1-218-977-11	RES-CHIP	100K	5%	1/16W
R4529	1-218-977-11	RES-CHIP	100K	5%	1/16W
R4530	1-218-949-11	RES-CHIP	470	5%	1/16W
R4531	1-218-990-11	SHORT	0		
R4532	1-218-990-11	SHORT	0		
R4533	1-218-990-11	SHORT	0		
R4534	1-218-990-11	SHORT	0		
R4801	1-218-973-11	RES-CHIP	47K	5%	1/16W
					(TRV120/TRV120E/TRV120P/TRV125E)
R4802	1-218-961-11	RES-CHIP	4.7K	5%	1/16W

Ref. No.	Part No.	Description			Remark
R4803	1-218-977-11	RES-CHIP	100K	5%	1/16W
R4805	1-218-959-11	RES-CHIP	3.3K	5%	1/16W
					(TR8000E/TR8100E)
R4806	1-218-953-11	RES-CHIP	1K	5%	1/16W
					(TRV120/TRV120E/TRV120P/TRV125E)
R4807	1-218-957-11	RES-CHIP	2.2K	5%	1/16W
R4808	1-218-985-11	RES-CHIP	470K	5%	1/16W
R4809	1-218-953-11	RES-CHIP	1K	5%	1/16W
					(TRV120/TRV120E/TRV120P/TRV125E)
R4810	1-218-953-11	RES-CHIP	1K	5%	1/16W
R4811	1-218-977-11	RES-CHIP	100K	5%	1/16W
R4813	1-218-985-11	RES-CHIP	470K	5%	1/16W
R4814	1-218-985-11	RES-CHIP	470K	5%	1/16W
R4815	1-218-985-11	RES-CHIP	470K	5%	1/16W
R4816	1-218-985-11	RES-CHIP	470K	5%	1/16W
R4817	1-218-985-11	RES-CHIP	470K	5%	1/16W
R4818	1-218-985-11	RES-CHIP	470K	5%	1/16W
R4819	1-218-985-11	RES-CHIP	470K	5%	1/16W
R4820	1-218-977-11	RES-CHIP	100K	5%	1/16W
R4821	1-218-985-11	RES-CHIP	470K	5%	1/16W
R4822	1-218-973-11	RES-CHIP	47K	5%	1/16W
R4823	1-218-965-11	RES-CHIP	10K	5%	1/16W
R4824	1-218-958-11	RES-CHIP	2.7K	5%	1/16W
R4825	1-218-953-11	RES-CHIP	1K	5%	1/16W
R4826	1-218-953-11	RES-CHIP	1K	5%	1/16W
R4827	1-218-953-11	RES-CHIP	1K	5%	1/16W
R4828	1-218-953-11	RES-CHIP	1K	5%	1/16W
R4829	1-218-953-11	RES-CHIP	1K	5%	1/16W
R4830	1-218-953-11	RES-CHIP	1K	5%	1/16W
R4832	1-218-989-11	RES-CHIP	1M	5%	1/16W
R4833	1-218-985-11	METAL CHIP	470K	0.5%	1/16W
R4834	1-218-985-11	METAL CHIP	470K	0.5%	1/16W
R4835	1-218-989-11	METAL CHIP	1M	0.5%	1/16W
R4836	1-218-989-11	METAL CHIP	1M	0.5%	1/16W
R4837	1-218-977-11	RES-CHIP	100K	5%	1/16W
R4838	1-218-977-11	RES-CHIP	100K	5%	1/16W
R4839	1-218-977-11	RES-CHIP	100K	5%	1/16W
R4840	1-218-953-11	RES-CHIP	1K	5%	1/16W
R4841	1-218-953-11	RES-CHIP	1K	5%	1/16W
R4842	1-218-953-11	RES-CHIP	1K	5%	1/16W
R4843	1-218-953-11	RES-CHIP	1K	5%	1/16W
R4844	1-218-953-11	RES-CHIP	1K	5%	1/16W
R4846	1-218-953-11	RES-CHIP	1K	5%	1/16W
R4848	1-218-953-11	RES-CHIP	1K	5%	1/16W
R4849	1-218-953-11	RES-CHIP	1K	5%	1/16W
R4851	1-218-977-11	RES-CHIP	100K	5%	1/16W
R4852	1-218-989-11	RES-CHIP	1M	5%	1/16W
R4853	1-218-990-11	SHORT	0		
R4855	1-218-977-11	RES-CHIP	100K	5%	1/16W
R4856	1-218-990-11	SHORT	0		
R4861	1-218-953-11	RES-CHIP	1K	5%	1/16W
R4862	1-218-953-11	RES-CHIP	1K	5%	1/16W
R4863	1-218-973-11	RES-CHIP	47K	5%	1/16W
R4864	1-218-986-11	RES-CHIP	560K	5%	1/16W
R4866	1-218-953-11	RES-CHIP	1K	5%	1/16W
R4867	1-218-985-11	RES-CHIP	470K	5%	1/16W
R4868	1-218-985-11	RES-CHIP	470K	5%	1/16W
R4869	1-218-985-11	RES-CHIP	470K	5%	1/16W
R4871	1-218-989-11	RES-CHIP	1M	5%	1/16W
R4872	1-218-977-11	RES-CHIP	100K	5%	1/16W
R4873	1-218-977-11	RES-CHIP	100K	5%	1/16W
R4874	1-218-953-11	RES-CHIP	1K	5%	1/16W
R4875	1-218-953-11	RES-CHIP	1K	5%	1/16W
R4876	1-219-570-11	RES-CHIP	10M	5%	1/16W
R4877	1-218-953-11	RES-CHIP	1K	5%	1/16W
R4878	1-218-977-11	RES-CHIP	100K	5%	1/16W
R4879	1-218-985-11	RES-CHIP	470K	5%	1/16W
R4880	1-218-985-11	RES-CHIP	470K	5%	1/16W
R4881	1-218-985-11	RES-CHIP	470K	5%	1/16W
R4882	1-218-949-11	RES-CHIP	470	5%	1/16W
R4883	1-218-985-11	RES-CHIP	470K	5%	1/16W
R4884	1-218-953-11	RES-CHIP	1K	5%	1/16W
R4885	1-218-953-11	RES-CHIP	1K	5%	1/16W
R4886	1-218-953-11	RES-CHIP	1K	5%	1/16W
R4887	1-218-977-11	RES-CHIP	100K	5%	1/16W
R4888	1-218-977-11	RES-CHIP	100K	5%	1/16W
R4892	1-218-953-11	RES-CHIP	1K	5%	1/16W
R4894	1-218-990-11	SHORT	0		
R4895	1-218-965-11	RES-CHIP	10K	5%	1/16W
R4897	1-218-990-11	SHORT	0		
R4901	1-218-953-11	RES-CHIP	1K	5%	1/16W
R4902	1-218-986-11	RES-CHIP	560K	5%	1/16W
R4903	1-218-990-11	SHORT	0		
R4904	1-218-977-11	RES-CHIP	100K	5%	1/16W
R4906	1-218-990-11	SHORT	0		
R4908	1-218-977-11	RES-CHIP	100K	5%	1/16W
R4910	1-218-977-11	RES-CHIP	100K	5%	1/16W
R4911	1-218-977-11	RES-CHIP	100K	5%	1/16W
R4912	1-218-961-11	RES-CHIP	4.7K	5%	1/16W
R4913	1-218-957-11	RES-CHIP	2.2K	5%	1/16W
R4914	1-218-990-11	SHORT	0		
R4915	1-218-961-11	RES-CHIP	4.7K	5%	1/16W
R4916	1-218-961-11	RES-CHIP	4.7K	5%	1/16W
R4917	1-218-953-11	RES-CHIP	1K	5%	1/16W
R4918	1-218-957-11	RES-CHIP	2.2K	5%	1/16W
R4919	1-218-990-11	SHORT	0		
R4920	1-218-965-11	RES-CHIP	10K	5%	1/16W
R4921	1-218-965-11	RES-CHIP	10K	5%	1/16W
R4922	1-218-973-11	RES-CHIP	47K	5%	1/16W
R4923	1-218-973-11	RES-CHIP	47K	5%	1/16W
R4924	1-218-973-11	RES-CHIP	47K	5%	1/16W
R4925	1-218-985-11	RES-CHIP	470K	5%	1/16W
R4926	1-218-985-11	RES-CHIP	470K	5%	1/16W
R4927	1-218-973-11	RES-CHIP	47K	5%	1/16W
R4928	1-218-977-11	RES-CHIP	100K	5%	1/16W
R4929	1-218-977-11	RES-CHIP	100K	5%	1/16W
R4930	1-218-977-11	RES-CHIP	100K	5%	1/16W
R4931	1-218-973-11	RES-CHIP	47K	5%	1/16W
R4932	1-218-973-11	RES-CHIP	47K	5%	1/16W
R4933	1-218-990-11	SHORT	0		
R4934	1-218-990-11	SHORT	0		
R4935	1-218-977-11	RES-CHIP	100K	5%	1/16W
R4936	1-218-977-11	RES-CHIP	100K	5%	1/16W
R4938	1-218-977-11	RES-CHIP	100K	5%	1/16W
R4939	1-218-977-11	RES-CHIP	100K	5%	1/16W
R4940	1-218-977-11	RES-CHIP	100K	5%	1/16W
R4941	1-218-990-11	SHORT	0		
R4942	1-218-990-11	SHORT	0		
R4943	1-218-953-11	RES-CHIP	1K	5%	1/16W
R4944	1-218-953-11	RES-CHIP	1K	5%	1/16W
R5701	1-218-990-11	SHORT	0		

Ref. No.	Part No.	Description			Remark
R5702	1-218-990-11	SHORT	0		
R5707	1-218-953-11	RES-CHIP	1K	5%	1/16W
R5708	1-218-953-11	RES-CHIP	1K	5%	1/16W
R5709	1-218-973-11	RES-CHIP	47K	5%	1/16W
R5710	1-218-965-11	RES-CHIP	10K	5%	1/16W
R5711	1-218-941-11	RES-CHIP	100	5%	1/16W
R5712	1-218-941-11	RES-CHIP	100	5%	1/16W
R5714	1-218-973-11	RES-CHIP	47K	5%	1/16W
R5715	1-218-965-11	RES-CHIP	10K	5%	1/16W
R5717	1-218-953-11	RES-CHIP	1K	5%	1/16W
R5718	1-218-967-11	RES-CHIP	15K	5%	1/16W
R5719	1-218-976-11	RES-CHIP	82K	5%	1/16W
R5720	1-218-979-11	RES-CHIP	150K	5%	1/16W
R5721	1-218-973-11	RES-CHIP	47K	5%	1/16W
R5722	1-218-990-11	SHORT	0		
R5723	1-218-990-11	SHORT	0		
R5724	1-218-985-11	RES-CHIP	470K	5%	1/16W
R5725	1-218-985-11	RES-CHIP	470K	5%	1/16W
R5730	1-218-952-11	RES-CHIP	820	5%	1/16W
R5731	1-218-949-11	RES-CHIP	470	5%	1/16W
R5732	1-218-949-11	RES-CHIP	470	5%	1/16W
R5733	1-218-985-11	RES-CHIP	470K	5%	1/16W
R5735	1-218-990-11	SHORT	0		
R5736	1-218-990-11	SHORT	0		
R5737	1-218-990-11	SHORT	0		
R5738	1-218-990-11	SHORT	0		
R5739	1-218-990-11	SHORT	0		
R5740	1-218-990-11	SHORT	0		
R5741	1-218-990-11	SHORT	0		
R5742	1-218-965-11	RES-CHIP	10K	5%	1/16W
R5743	1-218-965-11	RES-CHIP	10K	5%	1/16W
R5744	1-218-973-11	RES-CHIP	47K	5%	1/16W
R5745	1-218-965-11	RES-CHIP	10K	5%	1/16W
R5746	1-218-965-11	RES-CHIP	10K	5%	1/16W
R5747	1-218-973-11	RES-CHIP	47K	5%	1/16W
		< TRANSFORMER >			
T1301	1-435-252-11	TRANSFORMER, DC-DC CONVERTER			
		< VIBRATOR >			
X1501	1-767-586-21	VIBRATOR, CRYSTAL (27MHZ) (TRV120/TRV120P)			
X1501	1-767-400-11	VIBRATOR, CRYSTAL (36MHz) (TRV120E/TRV125E/TR8000E/TR8100E)			
X3301	1-767-399-11	VIBRATOR, CRYSTAL (24.576MHZ)			
X4801	1-767-980-21	VIBRATOR, CERAMIC (20MHZ)			
X4802	1-760-458-21	VIBRATOR, CRYSTAL (32.768KHZ)			
X4901	1-760-655-41	VIBRATOR, CRYSTAL (20MHZ)			
	A-7073-838-A	VF-129 BOARD, COMPLETE (TRV120/TRV120P)			
	A-7073-855-A	VF-129 BOARD, COMPLETE (TRV120E/TRV125E/TR8000E/TR8100E)			
		**********			
		(Ref. No.: 20, 000 Series)			

Ref. No.	Part No.	Description			Remark
		< CAPACITOR >			
C901	1-107-854-11	TANTALUM CHIP	68uF	20%	6.3V
C902	1-163-038-91	CERAMIC CHIP	0.1uF		25V
C903	1-135-145-11	TANTALUM CHIP	0.47uF	10%	35V
C904	1-162-965-11	CERAMIC CHIP	0.0015uF	10%	50V
C905	1-104-752-11	TANTALUM CHIP	33uF	20%	6.3V
C906	1-162-638-11	CERAMIC CHIP	1uF		16V
C907	1-104-563-11	FILM CHIP	0.1uF	5%	16V
C908	1-162-920-11	CERAMIC CHIP	27PF	5%	50V
C909	1-163-009-11	CERAMIC CHIP	0.001uF	10%	50V
⚠C910	1-162-625-11	CERAMIC CHIP	0.0047uF	5%	50V
⚠C911	1-164-715-11	CERAMIC CHIP	0.0068uF	5%	50V
C912	1-107-854-11	TANTALUM CHIP	68uF	20%	6.3V
C913	1-135-145-11	TANTALUM CHIP	0.47uF	10%	35V
C914	1-113-984-11	TANTALUM CHIP	1.5uF	20%	35V
C915	1-163-037-11	CERAMIC CHIP	0.022uF	10%	25V
C916	1-164-611-11	CERAMIC CHIP	0.001uF	10%	500V
		< CONNECTOR >			
* CN901	1-785-379-01	HOUSING, CONNECTOR			
* CN902	1-580-057-11	PIN, CONNECTOR (SMD) 4P			
		< DIODE >			
D901	8-719-951-21	DIODE PR1102W-TR (TALLY)			
D903	8-719-073-01	DIODE MA111- (K8) .S0			
		< IC >			
IC901	8-759-196-14	IC BA7149F-E2			
		< COIL >			
L901	1-412-031-11	INDUCTOR CHIP	47uH		
L902	1-410-387-11	INDUCTOR CHIP	33uH		
⚠L903	1-411-697-11	COIL, FERRITE (HLC)			
		< TRANSISTOR >			
Q901	8-729-230-63	TRANSISTOR 2SD1819A-QRS-TX			
Q902	8-729-106-68	TRANSISTOR 2SD1615-T1GLGK			
Q903	8-729-216-31	TRANSISTOR 2SA1163G-TE85L			
Q904	8-729-230-63	TRANSISTOR 2SD1819A-QRS-TX			
		< RESISTOR >			
R901	1-216-817-11	METAL CHIP	470	5%	1/16W
R902	1-216-817-11	METAL CHIP	470	5%	1/16W
R903	1-216-055-00	METAL CHIP	1.8K	5%	1/10W
R904	1-216-833-91	RES-CHIP	10K	5%	1/16W
R905	1-216-822-11	METAL CHIP	1.2K	5%	1/16W
R906	1-216-823-11	METAL CHIP	1.5K	5%	1/16W
R907	1-216-845-11	METAL CHIP	100K	5%	1/16W
R908	1-216-852-11	METAL CHIP	390K	5%	1/16W
R909	1-216-833-91	RES-CHIP	10K	5%	1/16W
R910	1-216-835-11	METAL CHIP	15K	5%	1/16W
R911	1-216-160-00	RES-CHIP	27	5%	1/8W
R912	1-216-857-11	METAL CHIP	1M	5%	1/16W
R915	1-218-879-11	METAL CHIP	22K	0.5%	1/16W (TRV120/TRV120P)
R916	1-218-881-11	METAL CHIP	27K	0.5%	1/16W (TRV120E/TRV125E/TR8000/TR8100)

The components identified by mark ⚠ or dotted line with mark ⚠ are critical for safety. Replace only with part number specified.	Les composants identifiés par une marque ⚠ sont critiques pour la sécurité. Ne les remplacer que par une pièce portant le numéro spécifié.

Ref. No.	Part No.	Description			Remark
R917	1-218-891-11	METAL CHIP	68K	0.5%	1/16W (TRV120/TRV120P)
R917	1-218-893-11	METAL CHIP	82K	0.5%	1/16W (TRV120E/TRV125E/TR8000/TR8100)
R918	1-216-829-11	METAL CHIP	4.7K	5%	1/16W
R919	1-216-843-11	METAL CHIP	68K	5%	1/16W
R920	1-216-837-11	METAL CHIP	22K	5%	1/16W
R921	1-216-795-11	RES-CHIP	6.8	5%	1/16W
R922	1-216-850-11	METAL CHIP	270K	5%	1/16W
R923	1-216-857-11	METAL CHIP	1M	5%	1/16W
R924	1-216-862-11	RES-CHIP	2.7M	5%	1/16W
R925	1-216-862-11	RES-CHIP	2.7M	5%	1/16W
R926	1-216-821-11	METAL CHIP	1K	5%	1/16W
R927	1-216-821-11	METAL CHIP	1K	5%	1/16W
R928	1-216-827-11	METAL CHIP	3.3K	5%	1/16W
R929	1-216-821-11	METAL CHIP	1K	5%	1/16W
R930	1-216-791-11	METAL CHIP	3.3	5%	1/16W
R931	1-217-671-11	METAL CHIP	1	5%	1/10W
R932	1-216-829-11	METAL CHIP	4.7K	5%	1/16W
		< VARIABLE RESISTOR >			
RV903	1-238-852-11	RES, ADJ, CERMET 470			
RV904	1-238-095-11	RES, ADJ, CERMET 470K			
		< TRANSFORMER >			
⚠T901	1-453-124-11	TRANSFORMER ASSY, FLYBACK			
		< FLAT CABLE >			
⚠W901	1-540-019-21	SOCKET ASSY, CRT			
		MISCELLANEOUS			
		**********			
10	1-676-818-31	FP-156 FLEXIBLE BOARD			
11	1-790-334-11	CABLE, FLEXIBLE FLAT (FFC-257S)			
59	1-418-801-11	SWITCH BLOCK, CONTROL (MF-10000) (TRV120/TRV120E/TRV120P/TRV125E)			
106	1-418-801-11	SWITCH BLOCK, CONTROL (MF-10000) (TR8000E/TR8100E)			
111	A-7094-826-A	INDICATION (LCD) BLOCK ASSY (SERVICE) (TR8000E/TR8100E)			
159	1-792-454-11	CABLE, FLEXIBLE FLAT (FFC-289)			
204	1-418-802-11	SWITCH BLOCK, CONTROL (PR-10000) (TRV120/TRV120P/TRV120E/TRV125E)			
206	1-960-225-11	HARNESS (DP-83) (TRV120/TRV120E/TRV120P/TRV125E)			
210	A-7094-826-A	INDICATION (LCD) BLOCK ASSY (SERVICE) (TRV120/TRV120E/TRV120P/TRV125E)			
256	1-418-800-21	SWITCH BLOCK, CONTROL (SS-10000) (TRV120/TRV120E: E, HK, AUS, CN, JE/TRV120P)			
256	1-418-800-41	SWITCH BLOCK, CONTROL (SS-10000) (TRV120E: AEP, UK, EE, NE, RU/TRV125E/TR8000E/TR8100E)			
261	1-694-384-11	TERMINAL BOARD, BATTERY			
301	1-793-996-11	CONNECTOR, EXTERNAL			
307	1-676-822-11	FP-161 FLEXIBLE BOARD			
309	1-758-155-21	FILTER BLOCK, OPTICAL (TRV120E/TRV125E/TR8000E/TR8100E)			
309	1-758-216-21	FILTER BLOCK, OPTICAL (TRV120/TRV120P)			
311	8-848-736-01	DEVICE, LENS LSV-680A			
312	1-758-445-11	IRIS IR-680 (including FLEXIBLE BOARD)			
351	1-676-819-11	FP-157 FLEXIBLE BOARD			
355	1-676-821-11	FP-160 FLEXIBLE BOARD			
356	1-500-226-31	BEAD, FERRITE			
358	1-676-820-11	FP-159 FLEXIBLE BOARD			
365	1-418-799-41	SWITCH BLOCK, CONTROL (FK-10000) (TRV120/TRV120E: E, HK, AUS, CN, JE/TRV120P)			
365	1-418-799-51	SWITCH BLOCK, CONTROL (FK-10000) (TRV120E: AEP, UK, EE, NE, RU/TRV125E/TR8000E/TR8100E)			
760	1-658-213-11	FP-355 FLEXIBLE BOARD			
762	1-657-786-13	FP-221 FLEXIBLE BOARD			
764	1-658-214-11	FP-356 FLEXIBLE BOARD			
803	1-657-785-11	FP-248 FLEXIBLE BOARD			
817	1-657-784-11	FP-220 FLEXIBLE BOARD			
D001	8-719-988-42	DIODE GL453			
IC101	A-7030-821-A	CCD BLOCK ASSY (CCD IMAGER) (TRV120/TRV120P) (Note)			
IC151	A-7031-072-A	CCD BLOCK ASSY (CCD IMAGER) (TRV120E/TRV125E/TR8000E/TR8100E) (Note)			
LCD901	1-803-852-21	INDICATOR MODULE LIQUID CRYSTAL (TYPE S 61K) (TRV120/TRV120P)			
LCD901	1-803-853-21	INDICATOR MODULE LIQUID CRYSTAL (TYPE S 123K) (TRV120E: AEP, UK, EE, NE, RU/TRV125E)			
LCD901	1-803-859-31	INDICATOR MODULE LIQUID CRYSTAL (TYPE C) (TRV120E: E, HK, AUS, CN, JE)			
⚠LED901	1-517-866-11	LIGHT, BACK (TRV120/TRV120E/TRV120P/TRV125E)			
⚠LED904	1-517-866-11	LIGHT, BACK (TR8000E/TR8100E)			
M901	A-7048-938-A	DRUM BLOCK ASSY (DKH-02A-R)			
M902	8-835-531-32	MOTOR, DC SCE-0601A/C-NP (CAPSTAN)			
M903	X-3945-401-1	MOTOR ASSY, DC (LOADING)			
M905	1-763-472-11	MOTOR, STEPPING (F680) (FOCUS)			
M906	1-763-471-11	MOTOR, STEPPING (Z680) (ZOOM)			
MIC5802	1-542-312-11	MICROPHONE (L)			
MIC5803	1-542-312-11	MICROPHONE (R)			
⚠ND901	1-517-751-11	TUBE, FLUORESCENT, COLD CATHODE (TRV120/TRV120E: E, HK, AUS, CN, JE/TRV120P)			
⚠ND901	1-517-751-21	TUBE, FLUORESCENT, COLD CATHODE (TRV120E: AEP, UK, EE, NE, RU/TRV125E)			
S001	1-692-614-11	SWITCH, PUSH (3 KEY) (Hi8 MP, ME/MP, REC PROOF)			
S002	1-572-688-11	SWITCH, PUSH (1 KEY) (C LOCK)			
S008	1-771-848-11	SWITCH, PUSH (PANEL OPEN/CLOSE) (TRV120/TRV120E/TRV120P/TRV125E)			
S901	1-762-436-15	SWITCH (ENCODER), ROTARY			
SP003	1-529-590-11	SPEAKER (2.0cm) (TRV120/TRV120E/TRV120P/TRV125E)			
⚠V901	1-452-673-61	CRT ASSY (M01KXX90WB)			

(Note) Be sure to read "Precautions for Replcement of CCD Imager" on page 4-8, 4-10 when changing the CCD imager

The components identified by mark ⚠ or dotted line with mark ⚠ are critical for safety. Replace only with part number specified.	Les composants identifiés par une marque ⚠ sont critiques pour la sécurité. Ne les remplacer que par une pièce portant le numéro spécifié.

Ref. No.	Part No.	Description	Remark
		ACCESSORIES & PACKING MATERIALS	
		**********	
	1-475-141-61	COMMANDER, REMOTE (RMT-814)	
⚠	1-475-599-11	ADAPTOR, AC (EXCEPT TRV120: KR)	
⚠	1-475-599-71	ADAPTOR, AC (TRV120: KR)	
⚠	1-569-007-11	ADAPTOR, CONVERSION 2P (TRV120: JE/TRV120E: JE)	
⚠	1-569-008-21	ADAPTOR, CONVERSION 2P (TRV120: E, HK/TRV120E: E, HK/TRV120P: E)	
⚠	1-573-291-11	ADAPTOR, CONVERSION 21P(TRV120E: AEP, UK, EE, NE, RU/TRV125E/TR8000E/TR8100E)	
⚠	1-696-819-11	CORD, POWER (TRV120E: AUS)	
	1-765-080-11	CORD, CONNECTION (AV CONNECTING CABLE 1.5m)	
⚠	1-769-608-11	CORD, POWER (TRV120: E, BR/TRV120E: AEP, EE, NE, RU, E/TRV120P: E/TRV125E/ TR8000E: AEP, EE, NE, RU/TR8100E)	
⚠	1-776-985-11	CORD, POWER (TRV120: KR)	
⚠	1-782-476-11	CORD, POWER (TRV120E: CN)	
⚠	1-783-374-11	CORD, POWER (TRV120: HK/TRV120E: UK, HK/TR8000E: UK)	
⚠	1-783-952-11	CORD, POWER (TRV120P: AR)	
⚠	1-790-073-11	CORD, POWER 2P (TRV120: JE/TRV120E: JE)	
⚠	1-790-107-22	CORD, POWER (TRV120: US, CND)	
	3-058-871-11	MANUAL, INSTRUCTION (ENGLISH) (TRV120: US, CND, JE)	
	3-058-871-21	MANUAL, INSTRUCTION (FRENCH) (TRV120: CND)	
	3-058-871-31	MANUAL, INSTRUCTION (ENGLISH) (TRV120: E, HK/TRV120P)	
	3-058-871-41	MANUAL, INSTRUCTION (SPANISH, PORTUGUESE) (TRV120: E, JE/TRV120P: E)	
	3-058-871-51	MANUAL, INSTRUCTION (TRADITIONAL CHINESE) (TRV120: E, HK)	
	3-058-871-61	MANUAL, INSTRUCTION (ARABIC) (TRV120: E)	
	3-058-871-71	MANUAL, INSTRUCTION (KOREAN) (TRV120: KR, JE)	
	3-058-872-11	MANUAL, INSTRUCTION (ENGLISH, RUSSIAN) (TRV120E: UK, EE, NE, RU/TRV125E)	
	3-058-872-21	MANUAL, INSTRUCTION (SPANISH, PORTUGUESE) (TRV120E: AEP/TRV125E)	
	3-058-872-31	MANUAL, INSTRUCTION (ITALIAN, DUTCH) (TRV120E: AEP/TRV125E)	
	3-058-872-41	MANUAL, INSTRUCTION (GERMAN, FRENCH) (TRV120E: AEP/TRV125E)	
	3-058-872-51	MANUAL, INSTRUCTION (POLISH, SWEDISH) (TRV120E: EE, NE, RU)	
	3-058-873-11	MANUAL, INSTRUCTION (ENGLISH, RUSSIAN) (TRV120E: E, HK, AUS, CN, JE)	
	3-058-873-21	MANUAL, INSTRUCTION (GERMAN, FRENCH) (TRV120E: E, JE)	
	3-058-873-31	MANUAL, INSTRUCTION (ARABIC, PERSIAN) (TRV120E: E)	
	3-058-873-41	MANUAL, INSTRUCTION (TRADITIONAL CHINESE) (TRV120E: HK, JE)	
	3-058-873-51	MANUAL, INSTRUCTION (SIMPLIFIED CHINESE) (TRV120E: E, CN)	
	3-058-874-11	MANUAL, INSTRUCTION (ENGLISH, RUSSIAN) (TR8000E: UK, EE, NE, RU/TR8100E)	
	3-058-874-21	MANUAL, INSTRUCTION (SPANISH, PORTUGUESE) (TR8000E: AEP/TR8100E)	
	3-058-874-31	MANUAL, INSTRUCTION (DUTCH, ITALIAN) (TR8000E: AEP/TR8100E)	
	3-058-874-41	MANUAL, INSTRUCTION (GERMAN, FRENCH) (TR8000E: AEP/TR8100E)	
	3-058-874-51	MANUAL, INSTRUCTION (POLISH, SWEDISH) (TR8000E: EE, NE, RU)	
	3-742-854-01	LID, BATTERY (for RMT-814)	
	3-987-015-01	BELT (S), SHOULDER	
	3-988-960-01	BAG (8500), CARRYING (TRV120P)	

The components identified by mark ⚠ or dotted line with mark ⚠ are critical for safety. Replace only with part number specified.	Les composants identifiés par une marque ⚠ sont critiques pour la sécurité. Ne les remplacer que par une pièce portant le numéro spécifié.

9-929-806-11

Sony Corporation
Personal VIDEO Products Company

2000B0535-1
Printed in Japan © 2000. 2
Published by Safety & Service Engineering Dept.